NEW SECTION

WAC 296-56-099 Definitions. Approved. The equipment has been approved for the specified use by a nationally recognized testing laboratory.

Approved power-operated industrial truck. One listed or approved for the intended use by a nationally recognized testing laboratory.

Apron. That open portion of a marine terminal immediately adjacent to a vessel berth and used in the direct transfer of cargo between the terminal and vessel.

Assistant director for DOSH. The assistant director of DOSH services, department of labor and industries or their authorized representative.

Authorized. In reference to an employee's assignment, means selected by the employer for that purpose.

Cage (basket guard). A barrier enclosing or nearly enclosing a ladder's climbing space and fastened to one or both of the ladder's side rails or to another structure.

Cargo board. The typical wing or lip-type stevedore board hoisted to or from vessels by means of a bar bridle. Other pallet boards include all other platforms used to hold cargo for the purpose of transporting it from place to place.

Cargo door (transit shed door). A door designed to permit transfer of cargo to and from a marine terminal structure.

Cargo packaging. Any method of containment for shipment, including cases, cartons, crates, and sacks, but excluding large units such as intermodal containers, vans, or similar devices.

Confined space. A space that:

(a) Is large enough and so configured that an employee can bodily enter and perform assigned work; and

(b) Has limited or restricted means for entry or exit (for example, tanks, vessels, silos, storage bins, hoppers, vaults, and pits are spaces that may have limited means of entry); and

(c) Is not designed for continuous employee occupancy.

Conveyor. A device designed exclusively for transporting bulk materials, packages or objects in a predetermined path and having fixed or selective points of loading or discharge.

Danger zone. Any place in or about a machine or piece of equipment where an employee may be struck by or caught between moving parts, caught between moving and stationary objects or parts of the machine, caught between the material and a moving part of the machine, burned by hot surfaces or exposed to electric shock. Examples of danger zones are nip and shear points, shear lines, drive mechanisms, and areas beneath counterweights.

Designated person. A person who possesses specialized abilities in a specific area and is assigned by the employer to perform a specific task in that area.

Dock. A wharf or pier forming all or part of a waterfront facility, including marginal or quayside berthing facilities; not to be confused with "loading dock" as at a transit shed or container freight station, or with the body of water between piers or wharves.

Dock facilities. Includes all piers, wharves, sheds, aprons, dolphins, cranes, or other gear or equipment owned or controlled by the dock or facility owner, where cargo or materials are loaded, moved or handled to or from a vessel.

Dockboards (car and bridge plates). Devices for spanning short distances between rail cars or highway vehicles and loading platforms that do not expose employees to falls greater than 4 feet (1.22 m).

DOSH. Division of Occupational Safety and Health.

Elevator. A permanent hoisting and lowering mechanism with a car or platform moving vertically in guides and serving two or more floors of a structure. The term excludes such devices as conveyors, tiering or piling machines, material hoists, skip or furnace hoists, wharf ramps, lift bridges, car lifts, and dumpers.

Enclosed space. An indoor space, other than a confined space, that may contain or accumulate a hazardous atmosphere due to inadequate natural ventilation. Examples of enclosed spaces are trailers, railcars, and storage rooms.

Escalator. A power-driven continuous moving stairway principally intended for the use of persons.

Examination. As applied to material handling devices required to be certified by this chapter, means a comprehensive survey consisting of the criteria outlined in WAC 296-56-60093 through 296-56-60097. The examination is supplemented by a unit proof test in the case of annual survey.

Fixed ladder. A ladder, including individual rung ladders, permanently attached to a structure, building, or piece of equipment.

Fixed stairway. Interior or exterior stairs serving machinery, tanks, or equipment, and stairs to or from floors, platforms, or pits. The term does not apply to stairs intended only for fire exit purposes, to articulated stairs (the angle of which changes with the rise and fall of the base support) or to stairs forming an integral part of machinery.

Flammable atmosphere. An atmosphere containing more than ten percent of the lower flammable limit (LFL) of a flammable or combustible vapor or dust mixed with air. Such atmospheres are usually toxic as well as flammable.

Front-end attachments.

(a) As applied to power-operated industrial trucks, means the various devices, such as roll clamps, rotating and sideshifting carriages, magnets, rams, crane arms or booms, load stabilizers, scoops, buckets, and dumping bins, attached to the load end for handling lifts as single or multiple units.

(b) As applied to cranes, means various attachments applied to the basic machine for the performance of functions such as lifting, clamshell, or magnet services.

Fumigant. Is a substance or mixture of substances, used to kill pests or prevent infestation, which is a gas or is rapidly or progressively transformed to the gaseous state even though some nongaseous or particulate matter may remain and be dispersed in the treatment space.

Guarded. Shielded, fenced, or enclosed by covers, casings, shields, troughs, spillways or railings, or guarded by position or location. Examples of guarding methods are guarding by location (positioning hazards so they are inaccessible to employees) and point of operation guarding (using barrier guards, two-hand tripping devices, electronic safety devices, or other such devices).

Hazardous cargo, material, substance or atmosphere.

(a) Any substance listed in chapters 296-62 and 296-841 WAC;

(b) Any material in the hazardous materials table and hazardous materials communications regulations of the Department of Transportation, 49 C.F.R. Part 172;

(c) Any article not properly described by a name in the hazardous materials table and hazardous materials communications regulations of the Department of Transportation, 49 C.F.R. Part 172, but which is properly classified under the definition of those categories of dangerous articles given in 49 C.F.R. Part 173;

(d) Atmospheres having concentrations of airborne chemicals in excess of permissible exposure limits as defined in chapter 296-62 WAC; or

(e) Any atmosphere with an oxygen content of less than nineteen and one-half percent by volume.

Hot work. Riveting, welding, flame cutting or other fire or spark-producing operation.

House falls. Spans and supporting members, winches, blocks, and standing and running rigging forming part of a marine terminal and used with a vessel's cargo gear to load or unload by means of married falls.

Inspection. As applied to material handling devices required to be certified by this chapter, includes a complete visual examination of all visible parts of the device.

Intermodal container. A reusable cargo container of rigid construction and rectangular configuration intended to contain one or more articles of cargo or bulk commodities for transportation by water and one or more other transport modes without intermediate cargo handling. The term includes completely enclosed units, open top units, fractional height units, units incorporating liquid or gas tanks and other variations fitting into the container system, demountable or with attached wheels. It does not include cylinders, drums, crates, cases, cartons, packages, sacks, unitized loads or any other form of packaging.

Ladder safety device. A support system limiting an employee's drop or fall from the ladder, and which may incorporate friction brakes, lifelines and lanyards, or sliding attachments.

Loose gear. Removable or replaceable components of equipment or devices which may be used with or as a part of assembled material handling units for purposes such as making connections, changing line direction and multiplying mechanical advantage. Examples include shackles and snatch blocks.

Marina. A small harbor or boat basin providing dockage, supplies, and services for small craft.

Marine terminal. Wharves, bulkheads, quays, piers, docks, and other berthing locations and adjacent storage or contiguous areas and structures associated with the primary movement of cargo or materials from vessel to shore or shore to vessel. It includes structures which are devoted to receiving, handling, holding, consolidation, loading or delivery of waterborne shipments and passengers, and areas devoted to the maintenance of the terminal or equipment. The term does not include production or manufacturing areas having their own docking facilities and located at a marine terminal nor storage facilities directly associated with those production or manufacturing areas.

Other pallet boards. All other platforms used to hold cargo for the purpose of transporting it from place to place.

Permit-required confined space (permit space). A confined space that has one or more of the following characteristics:

(a) Contains or has a potential to contain a hazardous atmosphere;

(b) Contains a material that has the potential for engulfing an entrant;

(c) Has an internal configuration such that an entrant could be trapped or asphyxiated by inwardly converging walls or by a floor which slopes downward and tapers to a smaller cross-section; or

(d) Contains any other recognized serious safety or health hazard.

Ramps. Other flat-surface devices for passage between levels and across openings not covered under "dockboards."

Ship's stores. Materials that are aboard a vessel for the upkeep, maintenance, safety, operation, or navigation of the vessel, or for the safety or comfort of the vessel's passengers or crew.

Spiral stairway. One with closed circular form, uniform sector-shaped treads and a supporting column.

Spray booth. An enclosure containing a flammable or combustible spraying operation and confining and limiting the escape of paint, vapor and residue by means of a powered exhaust system.

Spraying area. Any area where flammable vapors, mists or combustible residues, dusts or deposits may be present due to paint spraying operations.

Well. A permanent complete enclosure around a fixed ladder, which is attached to the walls of the well.

((~~PART A—GENERAL~~))

AMENDATORY SECTION (Amending WSR 85-01-022, filed 12/11/84)

WAC 296-56-600 Marine terminals.

Summary

Your responsibility: To protect employees from hazards associated with marine terminals.

You must meet the requirements…	**in this section:**
Scope and applicability	WAC 296-56-60001
Variance and procedure	WAC 296-56-60003
Definitions	WAC 296-56-60005
Personnel	WAC 296-56-60006
Housekeeping	WAC 296-56-60007
Accident prevention program	WAC 296-56-60009
Emergency action plans	WAC 296-56-60010

AMENDATORY SECTION (Amending WSR 99-02-024, filed 12/30/98, effective 3/30/99)

WAC 296-56-60006 Personnel. (1) ((~~Qualifications of~~)) You must make sure machinery operators((~~.~~)) meet qualifications:

(a) Only those employees determined by the employer to be competent by reason of training or experience, who understand the signs, notices, and operating instructions and are familiar with the signal code in use ((~~shall~~)) must be permitted to operate a crane, winch, or other power-operated cargo handling apparatus, or any power-operated vehicle, or give signals to the operator of any hoisting apparatus. Employees being trained and supervised by a designated individual may operate such machinery and give signals to operators during training.

(b) No employee known to have defective uncorrected eyesight or hearing, or to be suffering from heart disease, epilepsy, or similar ailments which may suddenly incapacitate the employee ((~~shall~~)) must be permitted to operate a crane, winch, other power-operated cargo handling apparatus, or a power-operated vehicle.

(c) Persons who have recovered from a heart attack ((~~shall~~)) must be exempted from the provisions of (b) of this subsection, as it pertains to their heart condition, provided:

(i) A medical release is obtained from their attending medical doctor.

(ii) The release ((~~shall~~)) must state that the operation of a crane, winch, power-operated cargo handling apparatus, or power-operated vehicle, will not present a hazard to themselves or others.

(iii) An examination by a medical doctor, and renewal of the work release certification is required annually.

(2) You must meet the following requirements for supervisory accident prevention proficiency((~~.~~)):

(a) Immediate supervisors of cargo-handling operations of more than five persons ((~~shall~~)) must satisfactorily complete a course in accident prevention. Employees newly assigned to supervisory duties ((~~shall~~)) must be required to meet the provisions of this subsection (2)(a) within ninety days of such assignment.

(b) The course ((~~shall~~)) must consist of instruction suited to the particular operations involved.

(c) No minor under eighteen years of age ((~~shall~~)) must be employed in occupations involving the operation of any power-operated hoisting apparatus or assisting in such operations by performing work such as hooking on or landing drafts, rigging gear, etc.

AMENDATORY SECTION (Amending WSR 92-22-067, filed 10/30/92, effective 12/8/92)

WAC 296-56-60007 Housekeeping. (1) You must keep active work areas ((~~shall be kept~~)) free of equipment and materials not in use, and clear of debris, projecting nails, strapping and other sharp objects not necessary for the work in progress.

(2) You must make sure hatch beams, covers, and pontoons placed in terminal working areas ((~~shall be~~)) are stowed in stable piles with beams secured against tipping or falling. Alternatively, beams may be laid on their sides. When beams and pontoons are stowed in tiers more

than one high, dunnage or other suitable material ((~~shall~~)) must be used under and between tiers.

(3) ((~~Cargo and material shall~~)) You must not obstruct access to vessels, cranes, vehicles, or buildings with cargo and materials. Means of access and egress within buildings ((~~shall~~)) must be unobstructed.

(4) ((~~The employer shall~~)) You must eliminate, to the extent possible, conditions causing slippery working or walking surfaces in immediate work areas used by employees.

AMENDATORY SECTION (Amending WSR 07-03-163, filed 1/24/07, effective 4/1/07)

WAC 296-56-60009 Accident prevention program. (1) You must establish an accident prevention program, which provides equitable management-employee participation, ((~~shall be established~~)) in all establishments, industrial plants, or operations.

(2) ((~~It shall be the responsibility of the employer to~~)) You must initiate and maintain the accident prevention program necessary to comply with this section. ((~~The division of WISHA services~~)) DOSH may be contacted for assistance in initiating and maintaining an effective accident prevention program.

(3) You must tailor all accident prevention programs ((~~shall be tailored~~)) to the needs of the particular operation.

(4) You must have employer and employee representatives, as elected, delegated or appointed, ((~~shall~~)) to attend and actively take part in frequent and regular safety committee meetings.

(5) You must provide in the accident prevention programs ((~~shall provide~~)) for employer-employee safety meetings and frequent and regular safety inspections of job sites, materials, equipment, and operating procedures.

(6) You must maintain a record of safety activities, such as inspections and meetings, ((~~shall be maintained by the employer~~)) for a period covering the previous twelve months and ((~~shall~~)) must be made available, upon request, to noncompliance personnel of the department of labor and industries.

(7) You must ensure employees ((~~shall~~)) individually comply with all safety rules and cooperate with management in carrying out the accident prevention program.

(8) You must establish committees in each port to make effective the preceding statement and promote on-the-job accident prevention((~~, committees shall be established in each port~~)). These committees ((~~shall~~)) must consist of an equal number of port or stevedore company and longshoremen representatives at the job level with the industry or company safety supervisor serving as secretary and coordinator. Some functions of the committee are to maintain the interest of the workers in accident prevention by providing for their actual participation in the program, to direct their attention to the real causes of accidents, and to provide a means for making practical use of their intimate knowledge of working conditions and practices.

(9) It is intended that this program will produce mutually practical and effective recommendations regarding correction of accident-producing circumstances and conditions.

Note: For first-aid requirements, see WAC 296-800-150.

AMENDATORY SECTION (Amending WSR 07-03-163, filed 1/24/07, effective 4/1/07)

WAC 296-56-60010 Emergency action plans. (1) ((~~**Scope and application.** This section requires all employers to~~)) You must develop and implement an emergency action plan. The emergency action plan ((~~shall~~)) must be in writing (except as provided in subsection (5)(d) of this section) and ((~~shall~~)) must cover those designated actions employers and employees must take to ensure employee safety from fire and other emergencies.

Note: When an employer directs ((~~his or her~~)) their employees to respond to an emergency that is beyond the scope of the emergency action plan developed in accordance with this section, then chapter 296-824 WAC ((~~shall~~)) must apply.

(2) ((~~**Elements.**~~)) You must include the following elements, at a minimum, ((~~shall be included~~)) in the plan:

(a) Emergency escape procedures and emergency escape route assignments;

(b) Procedures to be followed by employees who remain to operate critical plant operations before they evacuate;

(c) Procedures to account for all employees after emergency evacuation has been completed;

(d) Rescue and medical duties for those employees who are to perform them;

(e) The preferred means of reporting fires and other emergencies; and

(f) Names or regular job titles of persons or departments that can be contacted for further information or explanation of duties under the plan.

(3) ((~~**Alarm system.** The employer shall~~)) You must establish an employee alarm system that provides warning for necessary emergency action and for reaction time for safe escape of employees from the workplace or the immediate work area.

(4) ((~~**Evacuation.** The employer shall~~)) You must establish the types of evacuation to be used in emergency circumstances.

(5) ((~~**Training.**~~)) You must meet the following requirements for training:

(a) Before implementing the emergency action plan, ((~~the employer shall~~)) you must designate and train a sufficient number of persons to assist in the safe and orderly emergency evacuation of employees.

(b) ((~~The employer shall~~)) You must review the plan with each employee covered by the plan at the following times:

(i) Initially when the plan is developed;

(ii) Whenever the employee's responsibilities or designated actions under the plan change; and

(iii) Whenever the plan is changed.

(c) ((~~The employer shall~~)) You must review with each employee upon initial assignment those parts of the plan that the employee must know to protect the employee in the event of an emergency. The written plan ((~~shall~~)) must be kept at the workplace and be made available for employee review.

(d) ((~~Employers with ten or fewer employees~~)) You may communicate the plan orally to employees and need not maintain a written plan if you have ten or fewer employees.

((~~PART B—WATERFRONT OPERATIONS~~))

NEW SECTION

WAC 296-56-60010A Waterfront operations.

Summary

This section applies to all waterfront operations in your workplace.

Your responsibility: To protect employees from waterfront operation hazards in your workplace.

You must meet the requirements…	**in this section:**
Slinging	WAC 296-56-60011
Stacking of cargo and pallets	WAC 296-56-60013
Coopering	WAC 296-56-60015
Line handling	WAC 296-56-60017
Standard gauge railroad operations	WAC 296-56-60019
Signals displayed by each maintenance crew	WAC 296-56-60021
Warning flags or lights	WAC 296-56-60023
Signals unobscured	WAC 296-56-60025
Audible warning system	WAC 296-56-60027
Safety observer on railroad switching	WAC 296-56-60029
Warning at road crossing	WAC 296-56-60031
Flying switches	WAC 296-56-60033
Clearance from railroad tracks	WAC 296-56-60035
Car plates	WAC 296-56-60037
Dockboards (bridge plates)	WAC 296-56-60039
Log handling	WAC 296-56-60041
Movement of barges and railcars	WAC 296-56-60043
Communication	WAC 296-56-60045
Open fires	WAC 296-56-60047

AMENDATORY SECTION (Amending WSR 99-02-024, filed 12/30/98, effective 3/30/99)

WAC 296-56-60011 Slinging. (1) ((~~Drafts shall be safely slung~~)) You must safely sling drafts before being hoisted. Loose dunnage or debris hanging or protruding from loads ((~~shall~~)) must be removed.

(2) You must hoist bales of cotton, wool, cork, wood pulp, gunny bags, or similar articles ((~~shall be hoisted~~)) only by straps strong enough to support the weight of the bale. At least two hooks, each in a separate strap, ((~~shall~~)) must be used.

(3) You must only hoist unitized loads bound by bands or straps ((~~shall only be hoisted~~)) by the banding or strapping if the banding or strapping is suitable for hoisting and is strong enough to support the weight of the load.

(4) You must use additional means of hoisting ((~~shall be employed~~)) to ensure safe lifting of unitized loads having damaged banding or strapping.

(5) You must use case hooks ((~~shall be used~~)) only with cases designed to be hoisted by these hooks.

(6) You must guide loads requiring continuous manual guidance during handling ((~~shall be guided~~)) by guide ropes (tag lines) that are long enough to control the load.

(7) You must handle intermodal containers ((~~shall be handled~~)) in accordance with WAC 296-56-60103.

(8) ((~~The employer shall~~)) You must require employees to stay clear of the area beneath overhead drafts or descending lifting gear.

(9) ((~~Employees shall not be permitted~~)) You must not permit employees to ride the hook or the load.

(10) You must attach cargo handling bridles, such as pallet bridles, which are to remain attached to the hoisting gear while hoisting successive drafts, ((~~shall be attached~~)) by shackles, or other positive means ((~~shall~~)) must be taken to prevent them from becoming accidentally disengaged from the cargo hook.

(11) You must sling drafts of lumber, pipe, dunnage and other pieces, the top layer of which is not bound by the sling, ((~~shall be slung~~)) in such a manner as to prevent sliders. Double slings ((~~shall~~)) must be used on unstrapped dunnage, except, when due to the size of hatch or deep tank openings, it is impractical to use them.

(12) You must not load hand loaded buckets, tubs, bins and baskets used in handling bulk cargo ((~~shall not be loaded~~)) above their rim.

AMENDATORY SECTION (Amending WSR 85-01-022, filed 12/11/84)

WAC 296-56-60013 Stacking of cargo and pallets. You must stack cargo, pallets, and other material stored in tiers ((~~shall be stacked~~)) in such a manner as to provide stability against sliding and collapse.

AMENDATORY SECTION (Amending WSR 85-01-022, filed 12/11/84)

WAC 296-56-60015 Coopering. You must perform repair and reconditioning of damaged or leaking cargo packaging (coopering) ((~~shall be performed~~)) so as not to endanger employees.

AMENDATORY SECTION (Amending WSR 09-15-144, filed 7/21/09, effective 9/1/09)

WAC 296-56-60017 Line handling. (1) ((~~In order to provide safe access for handling lines while mooring and unmooring vessels,~~)) You must not stow cargo or material ((~~shall not be stowed or vehicles placed~~)) or place vehicles where they obstruct the work surface, in order to provide safe access for handling lines while mooring and unmooring vessels.

(2) You must install grab lines or rails on the sides of permanent structures when stringpiece or apron width is insufficient for safe footing((~~, grab lines or rails shall be installed on the sides of permanent structures~~)). ("Stringpiece" means a narrow walkway between the water edge of a berth and a shed or other structure.)

(3) You must light areas around bitts or cleats where workers perform their duties as line handlers ((~~shall be lighted~~)) as required by this chapter. There ((~~shall~~)) must be a nonslip surface around each bitt or cleat.

(4) You must ensure a six inch by six inch toeboard is installed if the handrail is omitted on the line handling side for walkways on which the mooring hawsers must be moved ((~~may have the handrail omitted on the line handling side provided a six inch by six inch toeboard is installed~~)).

AMENDATORY SECTION (Amending WSR 86-03-064, filed 1/17/86)

WAC 296-56-60019 Standard gauge railroad operations. WAC 296-56-60019 through 296-56-60041 apply to standard gauge railroad operations.

(1) ((~~Work shall be~~)) You must make sure work is performed in railcars only if floors of the railcars are in visibly safe condition for the work activity being conducted and the equipment being used.

(2) You must establish a route ((~~shall be established~~)) to allow employees to pass to and from places of employment without passing under, over or through railcars, or between cars less than ten feet (3 m) apart on the same track.

(3) ((~~The employer shall~~)) You must direct that no employees remain in railcars after work is concluded. No employee ((~~shall~~)) may remain in a railcar after work is concluded.

(4) ((~~Railcars shall be~~)) You must make sure railcars are chocked or otherwise prevented from moving:

(a) While dockboards or carplates are in position; or

(b) While employees are working within, on or under the railcars or near the tracks at the ends of the cars.

(5) You must take positive means to protect employees from exposure to impact from moving railcars when employees are working in, on, or under a railcar((~~, positive means shall be taken to protect them from exposure to impact from moving railcars~~)).

(6) You must protect employees by flags and derails set a minimum of fifty feet from one or both ends of the worksite when there is work being carried on, in, or under cars which subjects employees to the hazard of moving railroad equipment ((~~shall be protected by flags and derails set a minimum of fifty feet from one or both ends of the worksite~~)). Where the spur track switch is less than fifty feet from the work location, the switch padlocked in the open position may take the place of the derail. The blue flag ((~~shall~~)) must be placed at that point.

(7) You must remove or place unsecured and over-hanging stakes, wire straps, banding, and similar objects so as not to create hazards before cars are moved((~~, unsecured and over-hanging stakes, wire straps, banding, and similar objects shall be removed or placed so as not to create hazards~~)).

(8) ((~~The employer shall~~)) You must institute all necessary controls during railcar movement to safeguard personnel. If winches or capstans are employed for movement, employees ((~~shall~~)) must stand clear of the hauling rope and ((~~shall~~)) must not stand between the rope and the cars.

(9) You must open doors slightly before being opened fully((~~, doors shall be opened slightly~~)) to ensure that the load has not shifted during transit. Special precautions ((~~shall~~)) must be taken if the doors being opened are visibly damaged.

(10) You must equip trucks or railcar doors with door opening attachments if power industrial trucks are used to open freight car doors((~~, the trucks or the railcar doors shall be equipped with door opening attachments~~)). Employees ((~~shall~~)) must stand clear of the railcar doors while they are being opened and closed.

(11) ((~~Only~~)) You must only use railcar door openers or power trucks equipped with door opening attachments ((~~shall be used~~)) to open jammed doors.

(12) ((~~Employees shall~~)) You must make sure employees do not remain in or on gondolas or flat cars when drafts that create overhead, caught-in, caught-between or struck-by hazards are being landed in or on the railcar. End gates, if raised, ((~~shall~~)) must be secured.

(13) You must make sure operators of railcar dumps ((~~shall~~)) have an unrestricted view of dumping operations and ((~~shall~~)) must have an emergency means of stopping movement.

(14) You must enclose recessed railroad switches ((~~shall be enclosed~~)) to provide a level surface.

(15) You must post warning signs ((~~shall be posted~~)) where doorways open onto tracks, at blind corners and at similar places where vision may be restricted.

(16) You must post warning signs ((~~shall be posted~~)) if insufficient clearance for personnel exists between railcars and structures.

AMENDATORY SECTION (Amending WSR 85-01-022, filed 12/11/84)

WAC 296-56-60021 Signals displayed by each maintenance crew. You must have each maintenance crew ((~~shall~~)) display and remove its own set of blue signals.

AMENDATORY SECTION (Amending WSR 86-03-064, filed 1/17/86)

WAC 296-56-60023 Warning flags or lights. You must display a blue flag, bright colored flag or blue light ((~~shall be displayed~~)) at one or both ends of an engine, car or train to indicate that workers are under or about the railway equipment. When such warning devices are displayed, the equipment ((~~shall~~)) must not be coupled to or moved. On a dead end spur, a blue light or flag may be displayed adjacent to the switch opening while cars are being loaded or unloaded.

AMENDATORY SECTION (Amending WSR 86-03-064, filed 1/17/86)

WAC 296-56-60025 Signals unobscured. You must not place equipment which could obscure signals ((~~shall not be placed~~)) on the track.

AMENDATORY SECTION (Amending WSR 86-03-064, filed 1/17/86)

WAC 296-56-60027 Audible warning system. You must employ a clearly audible warning system ((~~shall be employed~~)) when cars are being moved in areas where workers may be in the vicinity of the tracks. When the audible warning signal might not be heard above the surrounding noises, a person ((~~shall~~)) must be delegated and stationed close enough to the track crew to warn them, by contact, of the oncoming equipment.

AMENDATORY SECTION (Amending WSR 86-03-064, filed 1/17/86)

WAC 296-56-60029 Safety observer on railroad switching. You must have a person charged with the responsibility to warn of an approaching switch of the railway car or cars when persons are required to work between railway cars, underneath railway cars or in areas where switching is done, ((~~there shall be a person charged with the responsibility to warn of an approaching switch of the railway car or cars,~~)) unless other reasonable and practical safeguards are provided.

AMENDATORY SECTION (Amending WSR 86-03-064, filed 1/17/86)

WAC 296-56-60031 Warning at road crossing. You must have the locomotive engineer sound an audible whistle, horn or bell ((~~shall be sounded by the locomotive engineer~~)) to give adequate warning prior to switching across any road crossing. Whenever cars are pushed with a locomotive, a signalman ((~~shall~~)) must be located at the crossing to give signals in conjunction with other warnings by the engineer.

AMENDATORY SECTION (Amending WSR 85-01-022, filed 12/11/84)

WAC 296-56-60033 Flying switches. You must not use flying switches ((~~shall not be used~~)) when switching railroad equipment in congested areas or across roadways or walkways.

AMENDATORY SECTION (Amending WSR 85-01-022, filed 12/11/84)

WAC 296-56-60035 Clearance from railroad tracks. You must not stack or pile materials ((~~shall not be stacked or piled~~)) closer than eight and one-half feet from the center line of the railroad tracks.

AMENDATORY SECTION (Amending WSR 86-03-064, filed 1/17/86)

WAC 296-56-60037 Car plates. You must use a railway car plate whenever workers are required to move cargo into or out of a railway car((~~, a railway car plate shall be used which shall~~)) that meets the following specifications:

(1) All car plates ((~~shall~~)) must be strong enough to carry maximum loads with a safety factor of three.

(2) All car plates ((~~shall~~)) must be provided with positive stops to prevent shifting of plates. One set of these stops ((~~shall~~)) must be adjustable to allow for different spaces between car door and platform.

(3) Car plates ((~~shall~~)) must be so shaped that edges will always bear on the floor of car and platform to prevent "teetering" or rocking.

(4) All car plates ((~~shall~~)) must have skid resistant surfaces.

(5) All car plates ((~~shall~~)) must be provided with toe or guard plates at the sides with a minimum height of four inches.

(6) All car plates must bear no less than six inches back from edge of platform.

(7) Maximum capacity of car plates ((~~shall~~)) must be marked in a conspicuous place.

(8) Car plates ((~~shall~~)) must be provided with an appropriate fixture to enable the plates to be lifted and moved by fork trucks.

AMENDATORY SECTION (Amending WSR 86-03-064, filed 1/17/86)

WAC 296-56-60039 Dockboards (bridge plates). (1) You must use portable and powered dockboards ((~~shall be~~)) strong enough to carry the load imposed.

(2) You must secure portable dockboards ((~~shall be secured~~)) in position, either by being anchored or equipped with devices which will prevent slipping.

(3) You must design and construct powered dockboards ((~~shall be designed and constructed~~)) in accordance with commercial standards CS202-56 (1956) *Industrial Lifts and Hinged Loading Ramps* published by the United States Department of Commerce.

(4) You must provide handholds or other effective means((~~, shall be provided~~)) on portable dockboards to permit safe handling.

(5) You must provide positive protection ((~~shall be provided~~)) to prevent railroad cars from being moved while dockboards or bridge plates are in position.

AMENDATORY SECTION (Amending WSR 92-22-067, filed 10/30/92, effective 12/8/92)

WAC 296-56-60041 Log handling. (1) ((~~The employer shall~~)) You must ensure that structures (bunks) used to contain logs have rounded corners and rounded structural parts to avoid sling damage.

(2) You must have two or more binders or equivalently safe means of containment ((~~shall remain~~)) on logging trucks and railcars to secure logs during movement of the truck or car within the terminal. During unloading, logs ((~~shall~~)) must be prevented from moving while binders are being removed.

(3) ((~~Logs shall be hoisted~~)) You must hoist logs by two slings or by other gear designed for safe hoisting.

(4) You must not stack logs placed adjacent to vehicle curbs on the dock ((~~shall not be~~)) over one tier high unless placed in bunks or so stacked as not to roll or otherwise creating a hazard to employees.

(5) You must make sure before logs are slung up from the dock, they ((~~shall be~~)) are stably supported to prevent spreading and to allow passage of slings beneath the load. When bunks or similar retaining devices are used, no log shall be higher than the stanchions or retaining members of the device.

(6) You must make sure a draft of logs for hoisting aboard ship ((~~shall~~)) will not vary in length more than twenty percent.

(7) You must make sure audible alarms((~~.~~)) meet the following requirements:

(a) All bidirectional machines, ((~~shall~~)) must be equipped with a horn, distinguishable from the surrounding noise level, which ((~~shall~~)) must be operated as needed when the machine is moving in either direction. The horn ((~~shall~~)) must be maintained in operable condition.

(b) Automatic back-up alarms ((~~shall~~)) must be installed on bidirectional equipment used to handle logs or containers and ((~~shall~~)) must be maintained in operable condition.

AMENDATORY SECTION (Amending WSR 92-22-067, filed 10/30/92, effective 12/8/92)

WAC 296-56-60043 Movement of barges and railcars. You must not move barges and railcars ((~~shall not be moved~~)) by cargo runners (running rigging) from vessel cargo booms, cranes or other equipment not suitable for the purpose.

AMENDATORY SECTION (Amending WSR 85-10-004, filed 4/19/85)

WAC 296-56-60045 Communication. (1) ((~~Radio.~~)) You must provide crane operators, when practical and safe, ((~~crane operators shall be provided~~)) with a radio or telephone to be in contact with the signalman or crane chaser in those cases where a signalman or crane chaser is required.

(2) ((~~Interference.~~)) You must make sure cargo handling operations ((~~shall not be~~)) are not carried on when noise-producing maintenance, construction or repair work interferes with communication of warnings or instructions.

AMENDATORY SECTION (Amending WSR 85-01-022, filed 12/11/84)

WAC 296-56-60047 Open fires. You must prohibit open fires and fires in drums or similar containers ((~~are prohibited~~)).

((~~PART C—HAZARDOUS ATMOSPHERES AND MATERIALS~~))

NEW SECTION

WAC 296-56-60048 Hazardous atmospheres and materials.

Summary

This section applies to all machines in your workplace.

Your responsibility: To protect employees from hazardous atmospheres and materials in the workplace.

You must meet the requirements…	**in this section:**
Hazardous cargo	WAC 296-56-60049
Handling explosives or hazardous materials	WAC 296-56-60051

You must meet the requirements…	in this section:
Hazardous atmospheres and substances	WAC 296-56-60053
Carbon monoxide	WAC 296-56-60055
Fumigants, pesticides, insecticides and hazardous preservatives (see also WAC 296-56-60049, 296-56-60051 and 296-56-60053)	WAC 296-56-60057

AMENDATORY SECTION (Amending WSR 86-03-064, filed 1/17/86)

WAC 296-56-60049 Hazardous cargo. (1) You must ascertain whether any hazardous cargo is to be handled and must determine the nature of the hazard before cargo handling operations begin((~~, the employer shall ascertain whether any hazardous cargo is to be handled and shall determine the nature of the hazard. The employer shall~~)). You must inform employees of the nature of any hazard and any special precautions to be taken to prevent employee exposure, and ((~~shall~~)) must instruct employees to notify the employer of any leaks or spills.

(2) You must sling and secure all hazardous cargo ((~~shall be slung and secured~~)) so that neither the draft nor individual packages can fall as a result of tipping the draft or slackening of the supporting gear.

(3) You must remove employees from the affected area if hazardous cargo is spilled or if its packaging leaks((~~, employees shall be removed from the affected area~~)) until the employer has ascertained the specific hazards, provided any equipment, clothing, ventilation and fire protection equipment necessary to eliminate or protect against the hazard. Cleanup employees ((~~shall~~)) must be instructed as to the safe method of cleaning up and disposing of the spill, and handling and disposing of leaking containers. Actual cleanup or disposal work ((~~shall~~)) must be conducted under the supervision of a designated person.

(4) The Department of Transportation and the United States Coast Guard impose requirements related to handling, storing and transportation of hazardous cargo (see 33 C.F.R. Part 126, 46 C.F.R., 49 C.F.R.).

AMENDATORY SECTION (Amending WSR 86-03-064, filed 1/17/86)

WAC 296-56-60051 Handling explosives or hazardous materials. (1) You must thoroughly inform all workers handling explosive or other hazardous material which is properly labeled pursuant to the Washington State Labeling Code, chapters 296-62 and 296-64 WAC, promulgated by the department of labor and industries; or the Explosive Act, chapter 70.74 RCW and chapter 296-52 WAC; or the Federal and Washington State Food, Drug and Cosmetic Acts; the Federal Insecticide, Fungicide and Rodenticide Act, the Washington Pesticide Act, chapter 17.21 RCW;

the Federal Hazardous Substances Labeling Act; or the Interstate Commerce Commission and Foreign Commerce regulations; or explosives or other dangerous cargo which is reasonably known by the employers to be mislabeled or to be lacking a required label, ((~~shall be thoroughly informed by the employer~~)) of the explosive or hazardous nature of the cargo.

(2) ((~~In~~)) You must ensure that all shipping operations including, but not limited to, handling, storage, and preparation, compliance with the standards of the Interstate Commerce Commission, the United States Coast Guard, or the safety rules developed by the Institute of Makers of Explosives ((~~shall be~~)) are deemed proper and safe methods of operation.

(3) ((~~Handling of breakage.~~)) You must require the foreman to order the work in the immediate area to cease, if breakage should occur while handling explosives or other hazardous materials, ((~~the foreman shall order the work in the immediate area to cease~~)) until the hazard has been removed. ((~~It shall be the responsibility of the employer to~~)) You must use a safe method of handling such breakage and placing it in a remote, safe location.

(4) ((~~No smoking.~~)) You must prohibit all workers supervising or engaged in the handling, hoisting, stowing of explosives, combustible oxidizing materials or flammable materials ((~~shall smoke only~~)) from smoking, except in designated areas. No person shall smoke within one hundred feet of any location where such materials are handled or stored.

(5) ((~~Loading chute.~~)) You must take care in chuting packaged explosives((~~, care must be exercised~~)) to ensure that one package is taken from the mat before starting another. Each package ((~~shall~~)) must be completely removed from the mat before another is placed on the chute.

(6) ((~~Specifications for chutes.~~)) You must construct chutes only of wood in the loading of explosive merchandise in package form where chutes are used((~~, the chutes shall be constructed only of wood~~)). All fastenings shall be of wooden pins, dowelings, or pegs. Metal fastenings may be used, provided they are countersunk.

(7) ((~~Mattress landing buffer. The bottoms of the chutes shall be provided with~~)) You must provide a stuffed mattress not less than four inches thick and of sufficient width and length to allow for safe landing of packages at the bottoms of the chutes.

(8) You must sling and secure drafts of hazardous or explosive cargo shall be so slung and secured that neither the draft nor individual packages can fall as a result of tipping the draft or slackening the supporting gear.

AMENDATORY SECTION (Amending WSR 05-03-093, filed 1/18/05, effective 3/1/05)

WAC 296-56-60053 Hazardous atmospheres and substances. (1) Purpose and scope. ((~~This section covers areas where a hazardous atmosphere or substance may exist, except where one or more of the following sections apply: WAC 296-56-60049 Hazardous cargo; WAC 296-56-60051 Handling explosives or hazardous materials; WAC 296-56-60055 Carbon monoxide; WAC 296-56-60057 Fumigants, pesticides, insecticides and hazardous preservatives; WAC 296-56-60107 Terminal facilities handling~~

~~menhaden and similar species of fish; WAC 296-56-60235 Welding, cutting and heating (hot work); and WAC 296-56-60237 Spray painting.~~))

Important:
This section covers areas where a hazardous atmosphere or substance may exist, except where one or more of the following sections apply: 1. WAC 296-56-60049 Hazardous cargo 2. WAC 296-56-60051 Handling explosives or hazardous materials 3. WAC 296-56-60055 Carbon monoxide 4. WAC 296-56-60057 Fumigants, pesticides, insecticides and hazardous preservatives 5. WAC 296-56-60107 Terminal facilities handling menhaden and similar species of fish 6. WAC 296-56-60235 Welding, cutting and heating (hot work) 7. WAC 296-56-60237 Spray painting

(2) You must make a determination of hazard((~~.~~)):

(a) Whenever a room, building, vehicle, railcar or other space contains or has contained a hazardous atmosphere, a designated and appropriately equipped person ((~~shall~~)) must test the atmosphere before entry to determine whether a hazardous atmosphere exists.

(b) Records of results of any tests required by this section ((~~shall~~)) must be maintained for at least thirty days.

(3) ((~~Testing during ventilation. When mechanical ventilation is used to maintain a safe atmosphere, tests shall be~~)) You must make sure tests are made by a designated person to ensure that the atmosphere is not hazardous when mechanical ventilation is used to maintain a safe atmosphere.

(4) ((~~Entry into hazardous atmospheres.~~)) You must make sure only designated persons ((~~shall~~)) enter hazardous atmospheres. The following provisions ((~~shall~~)) apply:

(a) Persons entering a space containing a hazardous atmosphere ((~~shall~~)) must be protected by respiratory and emergency protective equipment meeting the requirements of chapter 296-842 WAC;

(b) Persons entering a space containing a hazardous atmosphere ((~~shall~~)) must be instructed in the nature of the hazard, precautions to be taken, and the use of protective and emergency equipment. Standby observers, similarly equipped and instructed, ((~~shall~~)) must continuously monitor the activity of employees within such space; and

(c) Except for emergency or rescue operations, employees ((~~shall~~)) must not enter into any atmosphere which has been identified as flammable or oxygen deficient (less than nineteen and one-half percent oxygen). Persons who may be required to enter flammable or oxygen deficient atmospheres in emergency operations ((~~shall~~)) must be instructed in the dangers attendant to those atmospheres and instructed in the use of self-contained breathing apparatus, which ((~~shall~~)) must be utilized.

(d) To prevent inadvertent employee entry into spaces that have been identified as having hazardous, flammable or oxygen deficient atmospheres, appropriate warning signs or equivalent means ((~~shall~~)) must be posted at all means of access to those spaces.

(5) ((~~When the packaging of asbestos cargo leaks, spillage shall be cleaned up by~~)) You must make sure only designated employees protected from the harmful effects of asbestos as required by WAC

296-62-07517 and chapter 296-65 WAC, clean up spills when the packaging of asbestos cargo leaks.

AMENDATORY SECTION (Amending WSR 86-03-064, filed 1/17/86)

WAC 296-56-60055 Carbon monoxide. (1) ((~~Exposure limits.~~)) You must maintain the carbon monoxide content of the atmosphere in a room, building, vehicle, railcar or any enclosed space shall be maintained below fifty parts per million (0.005%) as an eight-hour time-weighted average. Employees ((~~shall~~)) must be removed from the enclosed space if the carbon monoxide concentration exceeds one hundred parts per million (0.01%).

(2) ((~~Testing.~~)) You must conduct tests to determine carbon monoxide concentration ((~~shall be made~~)) whenever necessary to ensure that employee exposure does not exceed the limits specified in subsection (1) of this section.

(3) ((~~Instrumentation.~~)) You must make sure tests for carbon monoxide concentration ((~~shall be~~)) are made by designated persons using gas detector tube units certified by NIOSH under 30 C.F.R. Part 11 or other measuring instruments whose accuracy is as great or greater.

(4) ((~~Records.~~)) You must make available a record of the date, time, location and result of carbon monoxide tests ((~~shall be available~~)) for at least thirty days.

AMENDATORY SECTION (Amending WSR 05-03-093, filed 1/18/05, effective 3/1/05)

WAC 296-56-60057 Fumigants, pesticides, insecticides and hazardous preservatives (see also WAC 296-56-60049, 296-56-60051 and 296-56-60053). (1) You must make a determination as to whether a hazardous atmosphere is present whenever cargo in a space is or has been stowed, handled, or treated with a fumigant, pesticide, insecticide, or hazardous preservative((~~, a determination shall be made as to whether a hazardous atmosphere is present in the space~~)). Only employees protected as required in subsection (5) of this section shall enter the space if it is hazardous.

(2) You must make sure tests to determine the atmospheric concentration of chemicals used to treat cargo ((~~shall be~~)) are:

(a) Appropriate for the hazard involved;

(b) Conducted by designated persons; and

(c) Performed at the intervals necessary to ensure that employee exposure does not exceed the permissible exposure limit for the chemical involved, see chapters 296-62 and 296-841 WAC.

(3) ((~~Results of any tests shall be available~~)) You must make available any test results for at least thirty days.

(4) ((~~Chemicals shall only be~~)) You must make sure chemicals are only applied to cargoes by designated persons.

(5) You must make sure only designated persons ((~~shall~~)) enter hazardous atmospheres. Whenever a hazardous atmosphere is entered the following provisions apply((~~.~~)):

(a) Persons entering a space containing a hazardous atmosphere ((~~shall~~)) must be protected by respiratory and emergency protective equipment meeting the requirements of part G of this standard; and

(b) Persons entering a space containing a hazardous atmosphere ((~~shall~~)) must be instructed in the nature of the hazard, precautions to be taken, and the use of protective and emergency equipment. Stand-by observers, similarly equipped and instructed, ((~~shall~~)) must continuously monitor the activity of employees within such a space.

(6) ((~~Signs shall be clearly posted~~)) You must clearly post signs where fumigants, pesticides or hazardous preservatives have created a hazardous atmosphere. These signs ((~~shall~~)) must note the danger, identify specific chemical hazards, and give appropriate information and precautions, including instructions for the emergency treatment of employees affected by any chemical in use.

(7) ((~~In the case of containerized shipments of fumigated tobacco,~~)) You must aerate the contents of ((~~the~~)) a container ((~~shall be aerated~~)) by opening the container doors for a period of forty-eight hours after the completion of fumigation and prior to loading in the case of containerized shipments of fumigated tobacco. When tobacco is within shipping cases having polyethylene or similar bag liners, the aeration period ((~~shall~~)) must be seventy-two hours. ((~~The employer shall~~)) You must obtain a written warranty from the fumigation facility stating that the appropriate aeration period has been met.

((~~PART E—CARGO HANDLING GEAR AND EQUIPMENT~~))

NEW SECTION

WAC 296-56-60070 Cargo handling gear and equipment.

Summary

This section applies to all cargo handling gear and equipment in your workplace.

Your responsibility: To protect employees from cargo handling gear and equipment hazards in your workplace.

You must meet the requirement…	**in this section:**
House falls	WAC 296-56-60071
Miscellaneous auxiliary gear	WAC 296-56-60073
Cargo boards and other type pallet boards	WAC 296-56-60075
Powered industrial trucks	WAC 296-56-60077
General rules applicable to vehicles	WAC 296-56-60079
Multipiece and single-piece rim wheels	WAC 296-56-60081

You must meet the requirement…	in this section:
Cranes and derricks	WAC 296-56-60083
Crane load and limit devices	WAC 296-56-60085
Winches	WAC 296-56-60087
Conveyors	WAC 296-56-60089
Spouts, chutes, hoppers, bins, and associated equipment	WAC 296-56-60091
Certification of marine terminal material handling devices	WAC 296-56-60093
Advisory crane certification panel	WAC 296-56-60095
Unit proof load test and inspection	WAC 296-56-60097
Examination and inspection of cranes and derricks	WAC 296-56-60098
Hand tools	WAC 296-56-60099

AMENDATORY SECTION (Amending WSR 85-01-022, filed 12/11/84)

WAC 296-56-60071 House falls. (1) You must secure span beams ((~~shall be secured~~)) to prevent accidental dislodgement.

(2) You must provide a safe means of access ((~~shall be provided~~)) for employees working with house fall blocks.

(3) You must have designated employees ((~~shall~~)) inspect chains, links, shackles, swivels, blocks and other loose gear used in house fall operations before each day's use. Defective gear ((~~shall~~)) must not be used.

AMENDATORY SECTION (Amending WSR 00-21-103, filed 10/18/00, effective 2/1/01)

WAC 296-56-60073 Miscellaneous auxiliary gear. (1) You must meet the following requirements for routine inspections((~~.~~)):

(a) At the completion of each use, loose gear such as slings, chains, bridles, blocks, and hooks ((~~shall~~)) must be so placed as to avoid damage to the gear. Loose gear ((~~shall~~)) must be inspected and any defects corrected before reuse.

(b) All loose gear ((~~shall~~)) must be inspected by the employer or ((~~his/her~~)) their authorized representative before each use and, when necessary, at intervals during its use, to ensure that it is safe. Any gear which is found upon inspection to be unsafe ((~~shall~~)) must not be used until it is made safe.

(c) Defective gear ((~~shall~~)) must not be used. Distorted hooks, shackles, or similar gear ((~~shall~~)) must be discarded.

(d) Chains or other gear which have been lengthened, altered, or repaired by welding ((~~shall~~)) must be properly heat treated, and before again being put into use, ((~~shall~~)) must be tested and reexamined in the manner set forth in WAC 296-56-60097 and 296-56-60098.

(2) ((~~The employer shall~~)) You must maintain a record of the dates and results of the tests with each unit of gear concerned clearly identified. The records ((~~shall~~)) must be available for examination by division of consultation and compliance personnel and the employee safety committee.

(3) You must meet the following requirements for wire rope and wire rope slings((~~.~~)):

(a) ((~~The employer shall~~)) You must ascertain and adhere to the manufacturer's recommended ratings for wire rope and wire rope slings and ((~~shall~~)) must have such ratings available at the terminal. When the manufacturer is unable to supply such ratings, ((~~the employer shall~~)) you must use the tables for wire rope and wire rope slings found in American National Safety Standard for Slings, ANSI/ASME B30.9-1984. A design safety factor of at least five ((~~shall~~)) must be maintained for the common sizes of running wire used as falls, in purchases or in such uses as light load slings. Wire rope with a safety factor of less than five may be used only:

(i) In specialized equipment, such as cranes designed to be used with lesser wire rope safety factors;

(ii) In accordance with design factors in standing rigging applications; or

(iii) For heavy lifts or other purposes for which a safety factor of five is impractical and for which the employer can demonstrate that equivalent safety is ensured.

(b) Wire rope or wire rope slings exhibiting any of the following conditions ((~~shall~~)) must not be used:

(i) Ten randomly distributed broken wires in one rope lay or three or more broken wires in one strand in one rope lay;

(ii) Kinking, crushing, bird caging, or other damage resulting in distortion of the wire rope structure;

(iii) Evidence of heat damage;

(iv) Excessive wear, corrosion, deformation or other defect in the wire or attachments, including cracks in attachments;

(v) Any indication of strand or wire slippage in end attachments; or

(vi) More than one broken wire in the close vicinity of a socket or swaged fitting.

(c) Four by twenty-nine (4 x 29) wire rope ((~~shall~~)) must not be used in any running rigging.

(d) Protruding ends of strands in splices on slings and bridles ((~~shall~~)) must be covered or blunted. Coverings ((~~shall~~)) must be removable so that splices can be examined. Means used to cover or blunt ends ((~~shall~~)) must not damage the wire.

(e) Where wire rope clips are used to form eyes, ((~~the employer shall~~)) you must adhere to the manufacturer's recommendations, which ((~~shall~~)) must be available at the terminal. If "U" bolt clips are used and the manufacturer's recommendations are not available, Table C-1 ((~~shall~~)) must be used to determine the number and spacing of clips. "U" bolts ((~~shall~~)) must be applied with the "U" section in contact with the dead end of the rope.

Table C-1 ((—))
Number and Spacing of U-Bolt Wire Rope Clips

Improved plow steel, rope diameter	Minimum number of clips		Minimum spacing
inches/(cm)	Drop forged	Other material	inches/(cm)
1/2 or less (1.3)	3	4	3 (7.6)
5/8 (1.6)	3	4	3 3/4 (9.5)
3/4 (1.9)	4	5	4 1/2 (11.4)
7/8 (2.2)	4	5	5 1/4 (13.3)
1 (2.5)	5	7	6 (15.2)
1 1/8 (2.9)	6	7	6 3/4 (17.1)
1 1/4 (3.2)	6	8	7 1/2 (19.1)
1 3/8 (3.5)	7	8	8 1/4 (21.0)
1 1/2 (3.8)	7	9	9 (22.9)

(f) Wire rope ((~~shall~~)) must not be secured by knots.

(g) Eyes in wire rope bridles, slings, bull wires, or in single parts used for hoisting ((~~shall~~)) must not be formed by wire rope clips or knots.

(h) Eye splices in wire ropes ((~~shall~~)) must have at least three tucks with a whole strand of the rope and two tucks with one-half of the wire cut from each strand. Other forms of splices or connections which are demonstrated to be equally safe may be used.

(i) Except for eye splices in the ends of wires and for endless rope slings, each wire rope used in hoisting or lowering, or in bulling cargo, ((~~shall~~)) must consist of one continuous piece without knot or splice.

(4) You must meet the following requirements for natural fiber rope.

(a) ((~~The employer shall~~)) You must ascertain the manufacturer's ratings for the specific natural fiber rope used and have such ratings available at the terminal. The manufacturer's ratings ((~~shall~~)) must be adhered to and a minimum design safety factor of five maintained.

(b) Eye splices ((~~shall~~)) must consist of at least three full tucks. Short splices ((~~shall~~)) must consist of at least six full tucks, three on each side of the center line.

(5) You must meet the following requirements for synthetic rope((~~.~~)):

(a) ((~~The employer shall~~)) You must adhere to the manufacturer's ratings and use recommendations for the specific synthetic fiber rope used and ((~~shall~~)) must have such ratings available at the terminal.

(b) Unless otherwise recommended by the manufacturer, when synthetic fiber ropes are substituted for manila ropes of less than three inches (7.62 cm) circumference, the substitute ((~~shall~~)) must be of equal size. Where substituted for manila rope of three inches or more in circumference, the size of the synthetic rope ((~~shall~~)) must be determined from the formula:

$$C = \sqrt{.6(C_s^2) + .4(C_m^2)}$$

Where C = the required circumference of the synthetic rope in inches, C_s = the circumference to the nearest one-quarter inch of a synthetic rope having a breaking strength not less than that of the size manila rope that would be required by subsection (4) of this section, and C_m = the circumference of manila rope in inches which would be required by subsection (4) of this section.

(c) In making such substitution, it ((~~shall~~)) must be ascertained that the inherent characteristics of the synthetic fiber are suitable for hoisting.

(6) ((~~Removal of natural and synthetic rope from service.~~)) You must remove natural or synthetic rope having any of the following defects ((~~shall be removed~~)) from service:

(a) Abnormal wear;

(b) Powdered fiber between strands;

(c) Sufficient cut or broken fibers to affect the capacity of the rope;

(d) Variations in the size or roundness of strands;

(e) Discolorations other than stains not associated with rope damage;

(f) Rotting; or

(g) Distortion or other damage to attached hardware.

(7) ((~~Thimbles.~~)) You must use properly fitting thimbles ((~~shall be used~~)) where any rope is secured permanently to a ring, shackle or attachment, where practical.

(8) You must meet the following requirements for synthetic web slings((~~.~~)):

(a) Slings and nets or other combinations of more than one piece of synthetic webbing assembled and used as a single unit (synthetic web slings) ((~~shall~~)) must not be used to hoist loads in excess of the sling's rated capacity.

(b) Synthetic web slings ((~~shall~~)) must be removed from service if they exhibit any of the following defects:

(i) Acid or caustic burns;

(ii) Melting or charring of any part of the sling surface;

(iii) Snags, punctures, tears or cuts;

(iv) Broken or worn stitches;

(v) Distortion or damage to fittings; or

(vi) Display of visible warning threads or markers designed to indicate excessive wear or damage.

(c) Defective synthetic web slings removed from service ((~~shall~~)) must not be returned to service unless repaired by a sling manufacturer or similar entity. Each repaired sling ((~~shall~~)) must be proof tested by the repairer to twice the slings' rated capacity prior to its return to service. ((~~The employer shall~~)) You must retain a certificate of the proof test and make it available for examination.

(d) Synthetic web slings provided by ((~~the employer shall~~)) you must only be used in accordance with the manufacturer's recommendations, which ((~~shall~~)) must be made available upon request.

(e) Fittings ((~~shall~~)) must have a breaking strength at least equal to that of the sling to which they are attached and ((~~shall~~)) must be free of sharp edges.

(9) You must meet the following requirements for chains and chain slings used for hoisting.

(a) ((~~The employer shall~~)) You must adhere to the manufacturer's recommended ratings for safe working loads for the sizes of the wrought iron and alloy steel chains and chain slings used and ((~~shall~~)) must have such ratings available. When the manufacturer is unable to provide such ratings, ((~~the employer shall~~)) you must use the tables for chains and chain slings found in American National Safety Standard for Slings, ANSI B30.9-1971.

(b) Proof coil steel chain, also known as common or hardware chain, and other chain not recommended by the manufacturer for slinging or hoisting ((~~shall~~)) must not be used for slinging or hoisting.

(c)((~~(i)~~)) Sling chains, including end fastenings, ((~~shall~~)) must be inspected for visible defects before each day's use and as often as necessary during use to ensure integrity of the sling.

((~~(ii)~~)) (i) Thorough inspections of chains in use ((~~shall~~)) must be made quarterly to detect wear, defective welds, deformation, increase in length or stretch. The month of inspection ((~~shall~~)) must be indicated on each chain by color of paint on a link or by other effective means.

((~~(iii)~~)) (ii) Chains ((~~shall~~)) must be removed from service when maximum allowable wear, as indicated in Table C-2, is reached at any point of link.

((~~(iv)~~)) (iii) Chain slings ((~~shall~~)) must be removed from service when stretch has increased the length of a measured section by more than five percent; when a link is bent, twisted or otherwise damaged; or when a link has a raised scarf or defective weld.

((~~(v)~~)) (iv) Only designated persons shall inspect chains used for slinging and hoisting.

Table C-2 ((—))
Maximum Allowable Wear at Any Point of Link

Chain Size		Maximum Allowable Wear	
Inches	**(cm)**	**Inches**	**(cm)**
1/4 (9/32)	(0.6)	3/64	(0.1)
3/8	(1.0)	5/64	(0.2)
1/2	(1.3)	7/64	(0.3)
5/8	(1.6)	9/64	(0.4)
3/4	(1.9)	5/32	(0.4)
7/8	(2.2)	11/64	(0.4)
1	(2.5)	3/16	(0.5)
1 1/8	(2.9)	7/32	(0.6)
1 1/4	(3.2)	1/4	(0.6)
1 3/8	(3.5)	9/32	(0.7)
1 1/2	(3.8)	5/16	(0.8)
1 3/4	(4.4)	((~~1 1/32~~)) 11/32	(0.9)

(d) Chains ((~~shall~~)) must only be repaired under qualified supervision. Links or portions of chain defective under any of the criteria ((~~of WAC 296-56-60073 (9)(c) shall~~)) under (c) of this subsection must be replaced with properly dimensioned links or connections of material similar to that of the original chain. Before repaired chains are returned to service, they ((~~shall~~)) must be tested to the proof test load recommended by the manufacturer for the original chain. Tests ((~~shall~~)) must be performed by the manufacturer or ((~~shall~~)) must be certified by an agency accredited for the purpose under WAC 296-56-60093. Test certificates ((~~shall~~)) must be available at the terminal.

(e) Wrought iron chains in constant use ((~~shall~~)) must be annealed or normalized at intervals not exceeding six months. Heat treatment certificates ((~~shall~~)) must be available at the terminal. Alloy chains ((~~shall~~)) must not be annealed.

(f) Kinked or knotted chains ((~~shall~~)) must not be used for lifting. Chains ((~~shall~~)) must not be shortened by bolting, wiring or

knotting. Makeshift links or fasteners such as wire, bolts or rods ((~~shall~~)) must not be used.

(g) Hooks, rings, links and attachments affixed to sling chains ((~~shall~~)) must have rated capacities at least equal to that of the chains to which they are attached.

(h) Chain slings ((~~shall~~)) must bear identification of size, grade and rated capacity.

(10) You must meet the following requirements for shackles((~~.~~)):

(a) If available, the manufacturer's recommended safe working loads for shackles ((~~shall~~)) must not be exceeded. In the absence of manufacturer's recommendations, Table C-3 ((~~shall~~)) must apply.

(b) Screw pin shackles used aloft in house fall or other gear, except in cargo hook assemblies, ((~~shall~~)) must have their pins moused or otherwise effectively secured.

Table C-3 ((—))
Safe Working Loads for Shackles

Material Size		Pin Diameter		Safe Working Load in 2,000 lb Tons
Inches	(cm)	Inches	(cm)	
1/2	(1.3)	5/8	(1.6)	1.4
5/8	(1.6)	3/4	(1.9)	2.2
3/4	(1.9)	7/8	(2.2)	3.2
7/8	(2.2)	1	(2.5)	4.3
1	(2.5)	1 1/8	(2.9)	5.6
1 1/8	(2.9)	1 1/4	(3.2)	6.7
1 1/4	(3.2)	1 3/8	(3.5)	8.2
1 3/8	(3.5)	1 1/2	(3.8)	10.0
1 1/2	(3.8)	1 5/8	(4.1)	11.9
1 3/4	(4.4)	2	(5.1)	16.2
2	(5.1)	2 1/4	(5.7)	21.2

(c) Tables G-2 through G-5 ((~~shall~~)) must be used to determine the safe working loads of various sizes and classifications of improved plow steel wire rope slings with various types of terminals. For sizes, classifications and grades not included in these tables the safe working load recommended by the manufacturer for specific, identifiable products ((~~shall~~)) must be followed, however, a safety factor of not less than five ((~~shall~~)) must be maintained.

TABLE G-1
MANILA ROPE
In Pounds or Tons of 2,000 Pounds

((~~Circumference~~	~~Diameter in Inches~~	~~Single Leg~~	~~60 Degree~~	~~45 Degree~~	~~30 Degree~~
		~~Lbs.~~	~~Lbs.~~	~~Lbs.~~	~~Lbs.~~))
Circumference	Diameter in Inches	Single Leg	60 Degree	45 Degree	30 Degree
		Lbs.	Lbs.	Lbs.	Lbs.
3/4	1/4	120	204	170	120
1	5/16	200	346	282	200
1 1/8	3/8	270	467	380	270

((~~Circum-ference~~	~~Diameter in Inches~~	~~Single Leg~~	~~60 Degree~~	~~45 Degree~~	~~30 Degree~~
		~~Lbs.~~	~~Lbs.~~	~~Lbs.~~	~~Lbs.~~))
Circum-ference	**Diameter in Inches**	**Single Leg**	**60 Degree**	**45 Degree**	**30 Degree**
		Lbs.	**Lbs.**	**Lbs.**	**Lbs.**
1 1/4	7/16	350	605	493	350
1 3/8	15/32	450	775	635	450
1 1/2	1/2	530	915	798	530
1 3/4	9/16	690	1190	973	690
2	5/8	880	1520	1240	880
2 1/4	3/4	1080	1870	1520	1080
2 1/2	13/16	1300	2250	1830	1300
2 3/4	7/8	1540	2660	2170	1540
3	1	1800	3120	2540	1800
		Tons	**Tons**	**Tons**	**Tons**
3 1/4	1 1/16	1.0	1.7	1.4	1.0
3 1/2	1 1/8	1.2	2.1	1.7	1.2
3 3/4	1 1/4	1.35	2.3	1.9	1.35
4	1 5/16	1.5	2.6	2.1	1.5
4 1/2	1 1/2	1.8	3.1	2.5	1.8
5	1 5/8	2.25	3.9	3.2	2.25
5 1/2	1 3/4	2.6	4.5	3.7	2.6
6	2	3.1	5.4	4.4	3.1
6 1/2	2 1/8	3.6	6.2	5.1	3.6

TABLE G-2
RATED CAPACITIES FOR IMPROVED PLOW STEEL, INDEPENDENT WIRE ROPE CORE, WIRE ROPE AND WIRE SLINGS
(In Tons of 2,000 Pounds)

Rope Diameter Inches	Single Leg					
	Vertical			Choker		
	A	B	C	A	B	C
6 x 19 Classification						
1/4"	.59	.56	.53	.44	.42	.40
3/8"	1.3	1.2	1.1	.98	.93	.86
1/2"	2.3	2.2	2.0	1.7	1.6	1.5
5/8"	3.6	3.4	3.0	2.7	2.5	2.2
3/4"	5.1	4.9	4.2	3.8	3.6	3.1
7/8"	6.9	6.6	5.5	5.2	4.9	4.1
1"	9.0	8.5	7.2	6.7	6.4	5.4
((~~1-1/8"~~)) 1 1/8"	11	10	9.0	8.5	7.8	6.8
6 x 37 Classification						
((~~1-1/4"~~)) 1 1/4"	13	12	10	9.9	9.2	7.9
((~~1-3/8"~~)) 1 3/8"	16	15	13	12	11	9.6
((~~1-1/2"~~)) 1 1/2"	19	17	15	14	13	11

Rope Diameter Inches	Single Leg					
	Vertical			Choker		
	A	B	C	A	B	C
((~~1-3/4"~~)) 1 3/4"	26	24	20	19	18	15
2"	33	30	26	25	23	20
((~~2-1/4"~~)) 2 1/4"	41	38	33	31	29	25

(A) — Socket or Swaged Terminal Attachment.
(B) — Mechanical Sleeve Attachment.
(C) — Hand Tucked Splice Attachment.

TABLE G-3
RATED CAPACITIES FOR IMPROVED PLOW STEEL, INDEPENDENT WIRE ROPE CORE, WIRE ROPE SLING (IN TONS OF 2,000 POUNDS)

				((~~Two-leg bridle or basket hitch~~								
~~Rope dia. inches~~	~~Vertical~~			~~60 Degree~~ 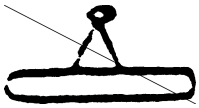			~~45 Degree~~ 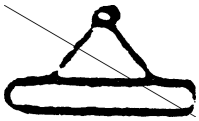			~~30 Degree~~))		
				Two-leg bridle or basket hitch								
Rope dia. inches	**Vertical**			**60 Degree** 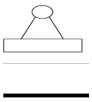			**45 Degree** 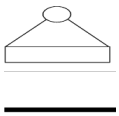			**30 Degree** 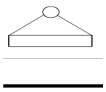		
	A	**B**	**C**	**A**	**B**	**C**	**A**	**B**	**C**	**A**	**B**	**C**
6 x 19 Classification												
1/4"	1.2	1.1	1.0	1.0	.97	.92	.83	.79	.75	.59	.56	.53
3/8"	2.6	2.5	2.3	2.3	2.1	2.0	1.8	1.8	1.6	1.3	1.2	1.1
1/2"	4.6	4.4	3.9	4.0	3.8	3.4	3.2	3.1	2.8	2.3	2.2	2.0
5/8"	7.2	6.8	6.0	6.2	5.9	5.2	5.1	4.8	4.2	3.6	3.4	3.0
3/4"	10	9.7	8.4	8.9	8.4	7.3	7.2	6.9	5.9	5.1	4.9	4.2
7/8"	14	13	11	12	11	9.6	9.8	9.3	7.8	6.9	6.6	5.5
1"	18	17	14	15	15	12	13	12	10	9.0	8.5	7.2
1 1/8"	23	21	18	19	18	16	16	15	13	11	10	9.0
6 x 37 Classification												
1 1/4"	26	24	21	23	21	18	19	17	15	13	12	10
1 3/8"	32	29	25	28	25	22	22	21	18	16	15	13
1 1/2"	38	35	30	33	30	26	27	25	21	19	17	15
1 3/4"	51	47	41	44	41	35	36	33	29	26	24	20
2"	66	61	53	57	53	46	47	43	37	33	30	26
2 1/4"	83	76	66	72	66	57	58	54	47	41	38	33

(A) Socket or Swaged Terminal Attachment.
(B) Mechanical Sleeve Attachment.
(C) Hand Tucked Splice Attachment.

TABLE G-4
RATED CAPACITIES FOR IMPROVED PLOW STEEL, FIBER CORE, WIRE ROPE AND WIRE ROPE SLINGS
(In Tons of 2,000 pounds)

Rope dia. Inches	Single leg					
	Vertical			Choker		
	A	B	C	A	B	C
6 x 19 Classification						
1/4"	.55	.51	.49	.41	.38	.37
3/8"	1.2	1.1	1.1	.91	.85	.80
1/2"	2.1	2.0	1.8	1.6	1.5	1.4
5/8"	3.3	3.1	2.8	2.5	2.3	2.1
3/4"	4.8	4.4	3.9	3.6	3.3	2.9
7/8"	6.4	5.9	5.1	4.8	4.5	3.9
1"	8.4	7.7	6.7	6.3	5.8	5.0
((~~1-1/8~~)) 1 1/8"	10	9.5	8.4	7.9	7.1	6.3
6 x 37 Classification						
((~~1-1/4~~)) 1 1/4"	12	11	9.8	9.2	8.3	7.4
((~~1-3/8~~)) 1 3/8"	15	13	12	11	10	8.9
((~~1-1/2~~)) 1 1/2"	17	16	14	13	12	10
((~~1-3/4~~)) 1 3/4"	24	21	19	18	16	14
2"	31	28	25	23	21	18
(A) — Socket or Swaged Terminal Attachment. (B) — Mechanical Sleeve Attachment. (C) — Hand Tucked Splice Attachment.						

TABLE G-5

RATED CAPACITIES FOR IMPROVED PLOW STEEL, FIBER CORE, WIRE ROPE SLINGS

(IN TONS OF 2,000 POUNDS)

				((~~**Two-leg bridle or basket hitch**~~								
~~**Rope dia. inches**~~	~~**Vertical**~~			~~**60 Degree**~~ 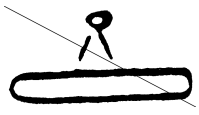			~~**45 Degree**~~ 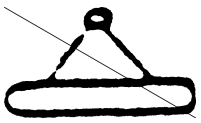			~~**30 Degree**~~ 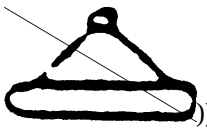		
												)))
				Two-leg bridle or basket hitch								
Rope dia. inches	**Vertical**			**60 Degree** 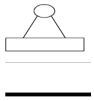			**45 Degree** 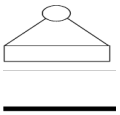			**30 Degree** 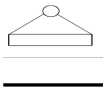		
	A	**B**	**C**	**A**	**B**	**C**	**A**	**B**	**C**	**A**	**B**	**C**
6 x 19 Classification												
1/4"	1.1	1.0	.99	.95	.88	.85	.77	.72	.70	.55	.51	.49
3/8"	2.4	2.2	2.1	2.1	1.9	1.8	1.7	1.6	1.5	1.2	1.1	1.1
1/2"	4.3	3.9	3.7	3.7	3.4	3.2	3.0	2.8	2.6	2.1	2.0	1.8
5/8"	6.7	6.2	5.6	5.8	5.3	4.8	4.7	4.4	4.0	3.3	3.1	2.8

((~~Two-leg bridle or basket hitch~~												
~~Rope dia. inches~~	~~Vertical~~			~~60 Degree~~ 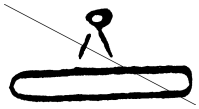			~~45 Degree~~ 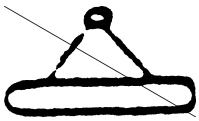			~~30 Degree~~ 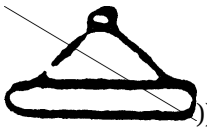))		
Two-leg bridle or basket hitch												
Rope dia. inches	**Vertical**			**60 Degree** 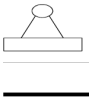			**45 Degree** 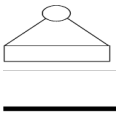			**30 Degree** 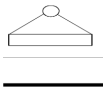		
	A	**B**	**C**	**A**	**B**	**C**	**A**	**B**	**C**	**A**	**B**	**C**
3/4"	9.5	8.8	7.8	8.2	7.6	6.8	6.7	6.2	5.5	4.8	4.4	3.9
7/8"	13	12	10	11	10	8.9	9.1	8.4	7.3	6.4	5.9	5.1
1"	17	15	13	14	13	11	12	11	9.4	8.4	7.7	6.7
1 1/2"	21	19	17	18	16	14	15	13	12	10	9.5	8.4
6 x 37 Classification												
1 1/4"	25	22	20	21	19	17	17	16	14	12	11	9.8
1 3/8"	30	27	24	26	23	20	21	19	17	15	13	12
1 1/2"	35	32	28	30	27	24	25	22	20	17	16	14
1 3/4"	48	43	38	41	37	33	34	30	27	24	21	19
2"	62	55	49	53	48	43	43	39	35	31	28	25

(A) Socket or Swaged Terminal Attachment.
(B) Mechanical Sleeve Attachment.
(C) Hand Tucked Splice Attachment.

TABLE G-6
ALLOY STEEL CHAIN
(In Tons of 2,000 Pounds)

((~~Nominal Size Chain Stock Inch~~	~~Single Leg~~	~~60 Degree~~	~~45 Degree~~	~~30 Degree~~))
Nominal Size Chain Stock Inch	**Single Leg**	**60 Degree**	**45 Degree**	**30 Degree**
1/4	1.62	2.82	2.27	1.62
3/8	3.30	5.70	4.65	3.30
1/2	5.62	9.75	7.90	5.62
5/8	8.25	14.25	11.65	8.25
3/4	11.5	19.9	16.2	11.5
7/8	14.3	24.9	20.3	14.3
1	19.3	33.5	27.3	19.8
1 1/8	22.2	38.5	31.5	22.2
1 1/4	28.7	49.7	40.5	28.7
1 3/8	33.5	58.0	47.0	33.5
1 1/2	39.7	68.5	56.0	39.7
1 5/8	42.5	73.5	59.5	42.5
1 3/4	47.0	81.5	62.0	47.0

(11) You must meet the following requirements for hooks other than hand hooks((~~.~~)):

(a) The manufacturer's recommendations ((~~shall~~)) must be followed in determining the safe working loads of the various sizes and types of specific and identifiable hooks. All hooks for which no applicable manufacturer's recommendations are available ((~~shall~~)) must be tested to twice the intended safe working load before they are initially put into use. ((~~The employer shall~~)) You must maintain a record of the dates and results of such tests.

(b) Loads ((~~shall~~)) must be applied to the throat of the hook since loading the point may overstress, bend, or spring the hook.

(c) Hooks ((~~shall~~)) must be inspected once a month to see that they have not been bent by overloading. Bent or sprung hooks ((~~shall~~)) must not be used.

(d) ((~~Crane hooks.~~)) For crane hooks, magnetic particle or other suitable crack detecting inspection ((~~shall~~)) must be performed at least once each year. When testing by X ray, the pertinent provisions of the Nuclear Regulatory Commission's standards for protection against radiation, relating to protection against occupational radiation exposure, ((~~shall~~)) must apply.

(e) Any activity which involves the use of radioactive materials or X rays, whether or not under license from the Nuclear Regulatory Commission, ((~~shall~~)) must be performed by competent persons specially trained in the proper and safe operation of such equipment. In the case of materials used under commission license, only persons actually licensed, or competent persons under direction and supervision of the licensee, ((~~shall~~)) must perform such work.

(f) Teeth of case hooks ((~~shall~~)) must not be split, cracked, or deformed.

(g) Jaws of patent clamp type plate hooks ((~~shall~~)) must be kept in safe condition so that they will grip plates securely.

(12) You must meet the following requirements for pallets((~~.~~)):

(a) Pallets ((~~shall~~)) must be made and maintained to safely support and carry loads being handled. Fastenings of reusable pallets used for hoisting ((~~shall~~)) must be bolts and nuts, drive screws (helically threaded nails), annular threaded nails or fastenings of equivalent holding strength.

(b) Damaged pallets ((~~shall~~)) must be stored in designated areas and identified.

(c) Reusable wing or lip-type pallets ((~~shall~~)) must be hoisted by bar bridles or other suitable gear and ((~~shall~~)) must have an overhanging wing or lip of at least three inches (7.62 cm). They ((~~shall~~)) must not be hoisted by wire slings alone.

(d) Loaded pallets that do not meet the requirements of this ((~~paragraph shall~~)) subsection (12)(d) must be hoisted only after being placed on pallets meeting such requirements or ((~~shall~~)) must be handled by other means providing equivalent protection.

(e) Bridles for handling flush end or box-type pallets ((~~shall~~)) must be designed to prevent disengagement from the pallet under load.

(f) Pallets ((~~shall~~)) must be stacked or placed to prevent falling, collapsing or otherwise causing a hazard under standard operating conditions.

(g) Disposable pallets intended only for one use ((~~shall~~)) must not be reused for hoisting.

AMENDATORY SECTION (Amending WSR 86-03-064, filed 1/17/86)

WAC 296-56-60075 Cargo boards and other type pallet boards. (1) ((~~"Cargo board" means the typical wing or lip-type stevedore board hoisted to or from vessels by means of a bar bridle. "Other pallet boards" includes all other platforms used to hold cargo for the purpose of transporting it from place to place.~~

~~(2)~~)) You must make sure all pallets and cargo boards ((~~shall be~~)) are of such material and construction as to safely support and carry loads being handled.

((~~(3)~~)) (2) You must make sure all cargo boards ((~~shall be~~)) are sheathed (decked) top and bottom with the top sheathing being of two-inch lumber and extending at least six inches beyond the end stringers.

((~~(4)~~)) (3) You must fasten the outer sheathing boards or boards adjacent thereto on cargo boards ((~~shall be fastened~~)) to the stringers by bolts and nuts. Other sheathing ((~~shall~~)) must be fastened by bolts and nuts, drive screws (helically threaded nails), annular threaded nails, or fastenings of equivalent strength.

((~~(5)~~)) (4) You may hoist pallet boards, other than cargo boards, ((~~may be hoisted~~)) if safe means are provided for the type of board used.

((~~(6)~~)) (5) You must make sure loaded cargo or pallet boards which do not meet the requirements of this section ((~~shall be~~)) are reboarded or placed on cargo boards meeting the requirements of this section before being hoisted, only if the weight of the load can be safely distributed on the cargo board.

((~~(7)~~)) (6) You must prohibit cargo boards from being hoisted which are not loaded and secured so that the load will not tip or fall ((~~shall not be hoisted~~)).

((~~(8)~~)) (7) You must make sure bridles used to handle flush-end or box-type pallets ((~~shall be of such a design as~~)) are designed to prevent them from becoming disengaged from the pallet under load.

Note: In areas where a two lip cargo board is being used, that practice shall continue. The department of labor and industries recommends the use of the two lip cargo board.

AMENDATORY SECTION (Amending WSR 09-15-144, filed 7/21/09, effective 9/1/09)

WAC 296-56-60077 Powered industrial trucks. (1) ((~~Applicability.~~)) This section applies to every type of powered industrial truck used for material or equipment handling within a marine terminal. ((~~Employers~~)) You must comply with the provisions of chapter 296-863 WAC and this section. It does not apply to over-the-road vehicles.

(2) ((~~General.~~)) You must meet the following general requirements for powered industrial trucks:

(a) Modifications, such as adding counterweights, that might affect the vehicle's capacity or safety ((~~shall~~)) must not be performed without either the manufacturer's prior written approval or the written approval of a professional engineer experienced with the equipment who has consulted with the manufacturer, if available. Capacity, operation and maintenance instruction plates, tags or decals ((~~shall~~)) must be changed to conform to the equipment as modified.

(b) Unauthorized personnel ((~~shall~~)) must not ride on powered industrial trucks. A safe place to ride ((~~shall~~)) must be provided when riding is authorized.

(c) When a powered industrial truck is left unattended, load-engaging means ((~~shall~~)) must be fully lowered, controls neutralized and brakes set. Unless the truck is in view and within twenty-five feet (7.62 m) of the operator, power ((~~shall~~)) must be shut off. Wheels ((~~shall~~)) must be blocked or curbed if the truck is on an incline.

(d) Powered industrial trucks ((~~shall~~)) must not be operated inside highway vehicles or railcars having damage which could affect operational safety.

(e) Powered industrial trucks ((~~shall~~)) must be marked with their rated capacities, which ((~~shall~~)) must be visible to the operator.

(f) Only stable and safely arranged loads within the rated capacity of the truck ((~~shall~~)) must be handled.

(g) Drivers ((~~shall~~)) must ascend and descend grades slowly.

(h) Drivers ((~~shall~~)) must slow down and sound the horn at cross-aisles and other locations where visibility is obstructed.

(i) If the load obstructs the forward view drivers ((~~shall~~)) must travel with the load trailing.

(j) Steering knobs ((~~shall~~)) must not be used unless the truck is equipped with power steering.

(k) When powered industrial trucks use cargo lifting devices that have a means of engagement hidden from the operator, a means ((~~shall~~)) must be provided to enable the operator to determine that the cargo has been engaged.

(l) When cargo is being towed on pipe trucks or similar equipment, a safe means ((~~shall~~)) must be provided to protect the driver from sliding loads.

(3) You must meet the following requirements for maintenance((~~.~~)):

(a) Only designated persons ((~~shall~~)) must perform maintenance and repair.

(b) Batteries on all powered trucks ((~~shall~~)) must be disconnected during repairs to the primary electrical system unless power is necessary for testing and repair. On trucks equipped with systems capable of storing residual energy, that energy ((~~shall~~)) must be safely discharged before work on the primary electrical system begins.

(c) Replacement parts whose function might affect operational safety ((~~shall~~)) must be equivalent in strength and performance capability to the original parts which they replace.

(d) Braking systems or other mechanisms used for braking ((~~shall~~)) must be operable and in safe condition.

(e) Powered industrial trucks ((~~shall~~)) must be maintained in safe working order. Safety devices ((~~shall~~)) must not be removed or made inoperative except as otherwise provided in this section. Trucks with a fuel system leak or any other safety defect ((~~shall~~)) must not be operated.

(f) Those repairs to the fuel and ignition systems of industrial trucks which involve fire hazards ((~~shall~~)) must be conducted only in locations designated as safe for such repairs.

(4) You must meet these requirements for approved trucks((~~.~~)):

(a) ((~~"Approved power-operated industrial truck" means one listed or approved for the intended use by a nationally recognized testing laboratory.~~

~~(b)~~)) Approved trucks acquired and used after February 15, 1972, ((~~shall~~)) must bear a label or other identification indicating testing laboratory approval.

((~~(c)~~)) (b) When the atmosphere in an area is hazardous and the provisions of United States Coast Guard regulations at 33 C.F.R. 126.15(e) do not apply, only power-operated industrial trucks approved for such locations ((~~shall~~)) must be used.

(5) ((~~Duties of operator.~~)) You must meet these requirements for operator duties:

(a) A power-driven vehicle operator's special duties are:

(i) To operate the vehicle in a safe manner.

(ii) To test brakes, steering gear, lights, horns, or other warning devices, clutches, etc., before starting work.

(iii) To have the vehicle at all times under control so that it can be brought to an emergency stop in the clear space in front of the vehicle.

(iv) To back down any incline of two percent or more when traveling with a load on the fork lift jitney.

(b) ((~~Unobstructed view.~~)) When traveling, power-propelled vehicles ((~~shall~~)) must at all times be operated in a manner giving the operator a reasonably unobstructed view in the direction of travel. Where this is impractical, the operator ((~~shall~~)) must be directed in travel, by a person designated to do so.

(c) ((~~Employee riding safety.~~)) Operators and authorized passengers ((~~shall not be~~)) are not permitted to ride with legs or arms extending outside any vehicle nor ((~~shall~~)) are they ((~~be~~)) permitted to ride while standing unless the vehicle is designed to be operated from a standing position.

(d) ((~~Moving vehicles.~~)) Vehicles ((~~shall~~)) must be controlled manually while being pushed or towed except when a tow bar is used. Special precautions ((~~shall~~)) must be taken when pushing vehicles where the view is obstructed. Vehicles ((~~shall~~)) must not be pushed with blades of a forklift.

(e) ((~~Moving highway trailers.~~)) In all cargo operations involving the use of highway trailers, trailers ((~~shall~~)) must be moved in such a manner that the moving trailer is completely under control at all times. Special caution ((~~shall~~)) must be exercised when such trailers are moving on inclines. Trailers ((~~shall~~)) must be loaded in a manner which will prevent the cargo from shifting, and the load in the trailer ((~~shall~~)) must be evenly distributed ((~~so as not to cause~~)) to prevent the trailer ((~~to tip~~)) from tipping to one side.

(f) ((~~Prohibited forms of riding.~~)) Riding on tongue or handles of trailers or forks of power-propelled vehicles is prohibited.

(g) ((~~Regular seats for riders.~~)) No one except the operator shall ride on power-driven vehicles unless regular seats are provided to accommodate passengers.

(h) ((~~Jumping on or off moving vehicles.~~)) Employees ((~~shall~~)) must not jump on or off moving vehicles.

(i) ((~~Reporting defects.~~)) If a power-driven vehicle is at any time found to be in any way unsafe, the operator ((~~shall~~)) must report ((~~same~~)) the defect immediately to the person in charge and such vehicle ((~~shall~~)) must not be used for production work until it has been made safe.

(6) You must meet the following requirements for vehicle equipment and maintenance((~~.~~)):

(a) ((~~Horns and lights.~~)) All power-propelled vehicles ((~~shall~~)) must be provided with horns or other warning devices.

(b) Power-propelled vehicles used for night work, when required to travel away from an illuminated work area ((~~shall~~)) must be equipped with a light or lights directed in the direction of travel in order to safely travel about the area.

(c) ((~~Guards on operator's platform.~~)) Every power truck operated from an end platform or standing position ((~~shall~~)) must be equipped with a substantial guard securely attached to the platform or frame of the vehicle in such a manner as to protect the operator from falling objects and so designed that the operator can easily mount or dismount from the operating station.

(d) ((~~Seat cushions.~~)) All vehicles having a driver's seat ((~~shall~~)) must be provided with resilient seat cushions fixed in place.

(e) ((~~Securing of counterbalances.~~)) Counterbalances of all power-driven vehicles ((~~shall~~)) must be positively secured to prevent accidental dislodging, but may be a removable type which may be removed, if desired, prior to hoisting the vehicle.

(f) ((~~Exhaust pipes and mufflers.~~)) Exhaust pipes and mufflers of internal combustion engines, where workers are exposed to contact shall be isolated or insulated. Exhaust pipes ((~~shall~~)) must be constructed to discharge not less than seventy-two inches above the floor on jitneys and eighty-four inches on forklifts or less than twenty inches from the floor.

(g) ((~~Ventilation where internal combustion vehicles are used.~~)) Internal combustion engines may be used only in areas where adequate ventilation is provided.

(h) Concentration levels of carbon monoxide gas created by powered industrial truck operations ((~~shall~~)) must not exceed the levels specified in WAC 296-56-60055.

(i) When disputes arise concerning degree of concentration, methods of sampling to ascertain the conditions should be referred to a qualified industrial hygienist.

(j) ((~~Cargo truck couplings.~~)) Couplings installed on cargo trucks (four-wheelers) ((~~shall~~)) must be of a type which will prevent accidental disengaging.

(k) ((~~Operating levers.~~)) Operating levers on power-driven vehicles ((~~shall~~)) must be so placed as not to project toward the operator's body.

(l) ((~~Front axle assembly.~~)) The front axle assembly on all trailers ((~~shall~~)) must be securely fastened to the truck bed.

(m) ((~~Air line hook-up.~~)) Tractors hauling heavy duty highway trailers ((~~shall~~)) must have an air line brake hook-up.

(n) ((~~Floor mats.~~)) On power-driven vehicles where the operator stands on a platform, resilient foot mats ((~~shall~~)) must be securely attached.

(o) ((~~Cleaning vehicles.~~)) All power-propelled vehicles ((~~shall~~)) must be cleaned at frequent intervals to remove any accumulation of dust and grease that may present a hazard.

(7) You must meet the following requirements for forklift trucks((~~.~~)):

(a) Overhead guards.

(i) When operators are exposed to overhead falling hazards, forklift trucks ((~~shall~~)) must be equipped with securely attached overhead guards. Guards ((~~shall~~)) must be constructed to protect the operator from falling boxes, cartons, packages, or similar objects.

(ii) Overhead guards ((~~shall~~)) must not obstruct the operator's view, and openings in the top of the guard ((~~shall~~)) must not exceed

six inches (15.24 cm) in one of the two directions, width or length. Larger openings are permitted if no opening allows the smallest unit of cargo being handled to fall through the guard.

(iii) Overhead guards ((~~shall~~)) must be built so that failure of the vehicle's mast tilting mechanism will not displace the guard.

(iv) An overhead guard, otherwise required by this paragraph, may be removed only when it would prevent a truck from entering a work space and if the operator is not exposed to low overhead obstructions in the work space.

(v) Overhead guards ((~~shall~~)) must be large enough to extend over the operator during all truck operations, including forward tilt.

(b) ((~~Supplies to ship's rail.~~)) Cargo or supplies ((~~shall~~)) must not be hoisted to or from ship's rail with a forklift. This does not apply to ramp or side port loading.

(c) ((~~Position of forks.~~)) When standing, lift forklift forks ((~~shall~~)) must be lowered to floor. When moving, lift forklift forks ((~~shall~~)) must be kept as low as possible.

(d) ((~~Forklift use in gangplank moving.~~)) Not less than two forklifts ((~~shall~~)) must be used to place or remove gangplanks unless fork width prevents tipping and manufacturer's rated lifting capacity of the forklift is not exceeded.

(e) ((~~Forklift seat covers.~~)) Seats on forklifts ((~~shall~~)) must be provided with a removable waterproof cover when they are exposed to the weather.

(f) ((~~Raised equipment to be blocked.~~)) Workers ((~~shall~~)) must not work below the raised bed of a dump truck, raised buckets of front end loaders, raised blades of tractors or in similar positions without blocking the equipment in a manner that will prevent it from falling. When working under equipment suspended by use of jacks, safety stands or blocking ((~~shall~~)) must be used in conjunction with the jack.

(g) ((~~Maximum speed.~~)) The maximum speed for forklifts on all docks ((~~shall~~)) must not exceed eight miles per hour. The speed limit ((~~shall~~)) must be prominently posted on such docks.

(h) ((~~Load backrest extensions.~~)) Where necessary to protect the operator, forklift trucks ((~~shall~~)) must be fitted with a vertical load backrest extension to prevent the load from hitting the mast when the mast is positioned at maximum backward tilt. For this purpose, a "load backrest extension" means a device extending vertically from the fork carriage frame to prevent raised loads from falling backward.

(i) ((~~Forks.~~)) Forks, fork extensions and other attachments ((~~shall~~)) must be secured so that they cannot be accidentally dislodged, and ((~~shall~~)) must be used only in accordance with the manufacturer's recommendations.

(j) ((~~Counterweights.~~)) Counterweights ((~~shall~~)) must be so affixed that they cannot be accidentally dislodged.

(k) Capacities and weights((~~.~~)):

(i) Forklift truck rated capacities, with and without removable counterweights, ((~~shall~~)) must not be exceeded. Rated capacities ((~~shall~~)) must be marked on the vehicle and ((~~shall~~)) be visible to the operator. The vehicle weight, with and without counterweight, ((~~shall~~)) must be similarly marked.

(ii) If loads are lifted by two or more trucks working in unison, the total weight of the load ((~~shall~~)) must not exceed the combined rated lifting capacity of all trucks involved.

(l) ((~~Lifting of employees.~~)) Employees may be elevated by forklift trucks only when a platform is secured to the lifting carriage or forks. The platform ((~~shall~~)) must meet the following requirements:

(i) The platform ((~~shall~~)) must have a railing complying with WAC 296-56-60123(3).

(ii) The platform ((~~shall~~)) must have toeboards complying with WAC 296-56-60123(4), if tools or other objects could fall on employees below.

(iii) When the truck has controls which are elevated with the lifting carriage, means ((~~shall~~)) must be provided for employees on the platform to shut off power to the vehicle.

(iv) Employees on the platform ((~~shall~~)) must be protected from exposure to moving truck parts.

(v) The platform floor ((~~shall~~)) must be skid resistant.

(vi) A truck operator ((~~shall~~)) must be at the truck's controls when employees are elevated unless the truck's controls are elevated with the lifting carriage.

(vii) While employees are elevated, the truck may be moved only to make minor placement adjustments.

(8) You must meet the following requirements for bulk cargo-moving vehicles((~~.~~)):

(a) Where a seated operator may come into contact with projecting overhead members, crawler-type ((~~bulk-cargo-moving~~)) bulk cargo-moving vehicles that are rider operated ((~~shall~~)) must be equipped with operator guards.

(b) Guards and their attachment points ((~~shall~~)) must be so designed as to be able to withstand, without excessive deflection, a load applied horizontally at the operator's shoulder level equal to the drawbar pull of the machine.

(c) After July 26, 1999, bulk cargo-moving vehicles ((~~shall~~)) must be equipped with rollover protection of such design and construction as to prevent the possibility of the operator being crushed because of a rollover or upset.

(9) You must meet the following requirements for straddle trucks((~~.~~)):

(a) ((~~Accessibility.~~)) Straddle trucks ((~~shall~~)) must have a permanent means of access to the operator's station, including any handholds necessary for safe ascent and descent.

(b) Guarding((~~.~~)):

(i) Main sprockets and chains to the wheels ((~~shall~~)) must be guarded as follows:

(A) The upper sprocket ((~~shall~~)) must be fully enclosed;

(B) The upper half of the lower sprocket ((~~shall~~)) must be enclosed; and

(C) The drive chain ((~~shall~~)) must be enclosed to a height of eight feet (2.44 m) except for that portion at the lower half of the lower sprocket.

(ii) Gears ((~~shall~~)) must be fully enclosed and revolving parts which may be contacted by the operator ((~~shall~~)) must be guarded.

(iii) When straddle trucks are used in the vicinity of employees, personnel-deflecting guards ((~~shall~~)) must be provided around leading edges of front and rear wheels.

(c) ((~~Visibility.~~)) Operator visibility ((~~shall~~)) must be provided in all directions of movement.

(10) You must meet the following requirements for trailer-spotting tractors((~~.~~)):

(a) Trailer-spotting tractors (fifth wheels) ((~~shall~~)) must be fitted with any hand grabs and footing necessary for safe access to the fifth wheel.

(b) Rear cab windows ((~~shall~~)) must be of safety glass or equivalent material.

AMENDATORY SECTION (Amending WSR 99-02-024, filed 12/30/98, effective 3/30/99)

WAC 296-56-60079 General rules applicable to vehicles. (1) The requirements of this section apply to general vehicle use within marine terminals except in cases where the provisions of subsections (3) and (13) of this section are preempted by regulations of the department of transportation.

(2) You must allow private vehicle parking in marine terminals ((~~shall be allowed~~)) only in designated areas.

(3) ((~~Trailers shall not be disconnected~~)) You must not disconnect trailers from tractors at loading docks until the road wheels have been immobilized. The road wheels ((~~shall~~)) must be immobilized from the time the brake system is disconnected until braking is again provided. Supplementary front end support ((~~shall~~)) must be employed as necessary to prevent tipping when a trailer is entered by a material handling vehicle. Rear end support ((~~shall~~)) must be employed if rear wheels are so far forward as to allow tipping when the trailer is entered.

(4) ((~~The employer shall~~)) You must direct motor vehicle operators to comply with any posted speed limits, other traffic control signs or signals, and written traffic instructions.

(5) You must post stop signs ((~~shall be posted~~)) at main entrances and exits of structures where visibility is impaired, and at blind intersections, unless direct traffic control, warning mirror systems or other systems of equivalent safety are provided.

(6) You must establish, identify, and use vehicular routes, traffic rules and parking areas ((~~shall be established, identified and used~~)).

(7) You must make sure vehicle drivers ((~~shall~~)) warn anyone in traffic lanes of the vehicle's approach.

(8) You must clearly post signs indicating pedestrian traffic ((~~shall be clearly posted~~)) at vehicular check-in and check-out lines and similar locations where employees may be working.

(9) You must maintain a distance of not less than twenty feet (6.1 m) ((~~shall be maintained~~)) between the first two vehicles in a check-in, check-out, road ability, or vessel loading/discharging line. This distance ((~~shall~~)) must be maintained between any subsequent vehicles behind which employees are required to work.

(10) You must make sure no unattended vehicle shall be left with its engine running unless secured against movement (see WAC 296-56-60077 for powered industrial trucks).

(11) You must provide and secure a ramp when the rear of a vehicle is elevated to facilitate loading or discharging((~~, a ramp shall be provided and secured~~)). The vehicle ((~~shall~~)) must be secured against accidental movement during loading or discharging.

(12) You must make sure only vehicle floors in safe condition ((~~shall be~~)) are used.

(13) You must make sure when flatbed trucks, platform containers or similar conveyances are loaded or discharged and the cargo consists

of pipe or other products which could spread or roll to endanger employees, the cargo ((~~shall be~~)) is contained to prevent movement.

(14) You must maintain vehicles used to transport employees within a terminal ((~~shall be maintained~~)) in safe working order and safety devices ((~~shall~~)) not be removed or made inoperable.

AMENDATORY SECTION (Amending WSR 07-03-163, filed 1/24/07, effective 4/1/07)

WAC 296-56-60081 Multipiece and single-piece rim wheels. You must make sure servicing of multipiece and single-piece rim wheels in marine terminal and other maritime work locations on large vehicles is regulated by requirements of chapter 296-864 WAC, Split (multipiece) rim and single-piece rim wheels.

AMENDATORY SECTION (Amending WSR 01-17-033, filed 8/8/01, effective 9/1/01)

WAC 296-56-60083 Cranes and derricks. (1) Scope.

(a) This section through WAC 296-56-60103 applies to every kind of crane and derrick and to any other type of equipment performing the functions of a crane or derrick except as noted in (b) of this subsection.

(b) This section does not apply to small industrial truck-type cranes, container handling toploaders and sideloaders, chain hoists, and mobile straddle-type cranes incapable of straddling two or more intermodal containers (sixteen feet (4.88 m) in width).

(2) You must meet the following requirements for ratings((~~.~~)):

(a) Except for bridge cranes covered by subsection (7) of this section, cranes and derricks having ratings that vary with boom length, radius (outreach) or other variables ((~~shall~~)) must have a durable rating chart visible to the operator, covering the complete range of the manufacturer's (or design) capacity ratings. The rating chart ((~~shall~~)) must include all operating radii (outreach) for all permissible boom lengths and jib lengths as applicable, with and without outriggers, and alternate ratings for optional equipment affecting such ratings. Precautions or warnings specified by the owner or manufacturer ((~~shall~~)) must be included.

(b) The manufacturer's (or design) rated loads for the conditions of use ((~~shall~~)) must not be exceeded.

(c) Designated working loads ((~~shall~~)) must not be increased beyond the manufacturer's ratings or original design limitations unless such increase receives the manufacturer's approval. When the manufacturer's services are not available or where the equipment is of foreign manufacture, engineering design analysis ((~~shall~~)) must be performed or approved by a person accredited for certifying the equipment under WAC 296-56-60093. Cranes ((~~shall~~)) must conform with the manufacturer's specifications or any current ANSI standards that apply. Engineering design analysis ((~~shall~~)) must be performed by a registered professional engineer competent in the field of cranes and der-

ricks. Any structural changes necessitated by the change in rating ((~~shall~~)) must be carried out.

(3) ((~~Radius indicator.~~)) You must make sure when the rated load varies with the boom radius, the crane or derrick ((~~shall be~~)) is fitted with a boom angle or radius indicator visible to the operator.

(4) ((~~Prohibited~~)) You must prohibit the following usage((~~.~~)):

(a) Equipment ((~~shall~~)) must not be used in a manner that exerts sideloading stresses upon the crane or derrick boom.

(b) No crane or derrick having a visible or known defect that affects safe operation ((~~shall~~)) must be used.

(5) You must meet the following requirements for protective devices((~~.~~)):

(a) When exposed moving parts such as gears, chains and chain sprockets present a hazard to employees during crane and derrick operations, those parts ((~~shall~~)) must be securely guarded.

(b) Crane hooks ((~~shall~~)) must be latched or otherwise secured to prevent accidental load disengagement.

(c) When hoisting personnel in an approved man basket, the hook ((~~shall~~)) must have a positive safety latch to prevent rollouts.

(6) ((~~General.~~)) You must meet the following general requirements:

(a) Operating controls((~~.~~)):

(i) Crane and derrick operating controls ((~~shall~~)) must be clearly marked, or a chart indicating their function ((~~shall~~)) must be posted at the operator's position.

(ii) All crane controls ((~~shall~~)) must operate in a uniform manner within a given port.

(iii) Overhead bridge and container gantry crane operating control levers ((~~shall~~)) must be self-centering so that they will automatically move to the "off" position when the operator releases the control.

(b) ((~~Booms.~~)) Cranes with elevatable booms and without operable automatic limiting devices ((~~shall~~)) must be provided with boom stops if boom elevation can exceed maximum design angles from the horizontal.

(c) ((~~Foot pedals.~~)) Foot pedals ((~~shall~~)) must have a nonskid surface.

(d) ((~~Access.~~)) Ladders, stairways, stanchions, grab irons, foot steps or equivalent means ((~~shall~~)) must be provided as necessary to ensure safe access to footwalks, cab platforms, the cab and any portion of the superstructure which employees must reach.

(i) Footwalks ((~~shall~~)) must be of rigid construction((~~, and shall be~~)) and capable of supporting a load of one hundred pounds (4.79 kPa) per square foot.

(ii) If more than twenty feet (6.1 m) in height, vertical ladders ((~~shall~~)) must comply with WAC 296-56-60209 (4), (5)(a), (5)(b)(iii) and (5)(b)(iv).

(iii) Stairways on cranes ((~~shall~~)) must be equipped with rigid handrails meeting the requirements of WAC 296-56-60123 (5)(a).

(iv) If the top of a ladder or stairway or any position thereof is located where a moving part of a crane, such as a revolving house, could strike an employee ascending or descending the ladder or stairway, a prominent warning sign ((~~shall~~)) must be posted at the foot of the ladder or stairway. A system of communication (such as a buzzer or bell) ((~~shall~~)) must be established and maintained between the foot of the ladder or stairway and the operator's cab.

(e) ((~~Operator's station.~~)) The cab, controls, and mechanism of the equipment ((~~shall~~)) must be so arranged that the operator has a clear view of the load or signal person, when one is used. Cab glass, when used, ((~~shall~~)) must be safety plate glass or equivalent and good visibility ((~~shall~~)) must be maintained through the glass. Clothing, tools and equipment ((~~shall~~)) must be stored so as not to interfere with access, operation, or the operator's view.

(f) A seat (lap) belt, meeting the requirements of 49 C.F.R. 571.208-210 for a Type 1 seat belt assembly, ((~~shall~~)) must be installed on the operator's seat of high speed container gantry cranes where the seat trolleys.

(g) ((~~Counterweights or ballast.~~)) Cranes ((~~shall~~)) must be operated only with the specified type and amount of ballast or counterweights. Ballast or counterweight ((~~shall~~)) must be located and secured only as provided in the manufacturer's or design specifications, which ((~~shall~~)) must be available.

(h) ((~~Outriggers.~~)) Outriggers ((~~shall~~)) must be used according to the manufacturer's specifications or design data, which ((~~shall~~)) must be available. Floats, when used, ((~~shall~~)) must be securely attached to the outriggers. Wood blocks or other support ((~~shall~~)) must be of sufficient size to support the outrigger, free of defects that may affect safety and of sufficient width and length to prevent the crane from shifting or toppling under load.

(i) ((~~Exhaust gases.~~)) Engine exhaust gases ((~~shall~~)) must be discharged away from the normal position of crane operating personnel.

(j) Electrical equipment ((~~shall~~)) must be so located or enclosed that live parts will not be exposed to accidental contact. Designated persons may work on energized equipment only if necessary during inspection, maintenance, or repair.

(k) Fire extinguisher((~~.~~)):

(i) At least one portable fire extinguisher of at least 5-BC rating or equivalent ((~~shall~~)) must be accessible in the cab of the crane or derrick.

(ii) No portable fire extinguisher using carbon tetrachloride or chlorobromomethane extinguishing agents ((~~shall~~)) must be used.

Note: For additional requirements relating to portable fire extinguishers see WAC 296-800-300.

(l) ((~~Rope on drums.~~)) At least three full turns of rope ((~~shall~~)) must remain on ungrooved drums, and two turns on grooved drums, under all operating conditions. Wire rope ((~~shall~~)) must be secured to drums by clamps, U-bolts, shackles, or equivalent means. Fiber rope fastenings are prohibited.

(m) ((~~Assembly or disassembly of boom sections.~~)) Mobile crane booms being assembled or disassembled on the ground with or without the support of the boom harness ((~~shall~~)) must be blocked to prevent dropping of the boom or boom sections.

(n) Brakes((~~.~~)):

(i) Each independent hoisting unit of a crane ((~~shall~~)) must be equipped with at least one holding brake, applied directly to the motor shaft or gear train.

(ii) Each independent hoisting unit of a crane, except worm geared hoists, the angle of whose worm is such as to prevent the load from accelerating in the lowering direction, ((~~shall~~)) must, in addition to a holding brake, be equipped with a controlled braking means to control lowering speeds.

(iii) Holding brakes for hoist units ((~~shall~~)) must have not less than the following percentage of the rated load hoisting torque at the point where the brake is applied:

(A) One hundred twenty-five percent when used with a controlled braking means.

(B) One hundred percent when used with a mechanically controlled braking means.

(C) One hundred percent when two holding brakes are provided.

(iv) All power control braking means ((~~shall~~)) must be capable of maintaining safe lowering speeds of rated loads.

(o) Each crane or derrick ((~~shall~~)) must be equipped with sufficient lights to maintain five foot candles in the working area around the load hook. All crane ladders and machinery houses ((~~shall~~)) must be illuminated at a minimum of two candle power.

(p) Light fixtures connected to the boom, gantry legs, or machinery house ((~~shall~~)) must be provided with safety devices which will prevent the light fixture from falling in case of bracket failure.

(q) Electronic devices may be installed to prevent collision subject to approval of the accredited certification agency.

(r) On all rail gantry cranes, truck guards ((~~shall~~)) must extend on the ends of the trucks, close to the top of the rail to prevent worker's feet from being caught between the rail and wheel. This subsection does not apply if rail sweeps are present.

(s) All hydraulic cylinders used to control crane booms or to provide crane stability (outriggers) ((~~shall~~)) must be equipped with a pilot operated check valve or a device which will prevent the boom or outrigger from retracting in case of failure of a component of the hydraulic system.

(t) Gantry cranes ((~~shall~~)) must be provided with automatic rail clamps or other devices to prevent the crane from moving when not being used or when power is off.

(7) You must meet the following requirements for rail-mounted cranes (excluding locomotive types)((~~.~~)):

(a) For the purposes of this section, rail-mounted cranes include bridge cranes and portal cranes.

(b) ((~~Rated load marking.~~)) The rated loads of bridge cranes ((~~shall~~)) must be plainly marked on each side of the crane and in the cab. If there is more than one hoisting unit, each hoist ((~~shall~~)) must have its rated load marked on it or on its load block. Marking ((~~shall~~)) must be legible from the ground level.

(c) Wind-indicating devices((~~.~~)):

(i) Each rail-mounted bridge and portal crane located outside of an enclosed structure ((~~shall~~)) must be fitted with an operable wind-indicating device.

(ii) The wind indicating device ((~~shall~~)) must provide a visible or audible warning to alert the operator of high wind conditions. That warning ((~~shall~~)) must be transmitted whenever the following circumstances are present:

(A) When wind velocity reaches the warning speed, not exceeding the crane manufacturer's recommendations; and

(B) When wind velocity reaches the shutdown speed, not exceeding the crane manufacturer's recommendations, at which work is to be stopped and the crane secured.

(iii) ((~~Instructions. The employer shall~~)) You must post operating instructions for high wind conditions in the operator's cab of each crane. Operators ((~~shall~~)) must be directed to comply with these instructions. The instructions ((~~shall~~)) must include procedures for

responding to high wind alerts and for any coordination necessary with other cranes.

(d) Securing of cranes in high winds.

(i) When the wind reaches the crane's warning speed:

(A) Gantry travel ((~~shall~~)) must be stopped; and

(B) The crane ((~~shall~~)) must be readied for shutdown.

(ii) When the wind reaches the crane's shutdown speed:

(A) Any portion of the crane spanning or partially spanning a vessel ((~~shall~~)) must be moved clear of the vessel if safe to do so; and

(B) The crane ((~~shall~~)) must be secured against travel, using all available means of securing.

(e) ((~~The employer shall~~)) You must monitor local weather conditions by subscribing to a weather service or using equally effective means.

(f) The following applies for stops and bumpers((~~.~~)):

(i) The ends of all tracks ((~~shall~~)) must be equipped with stops or bumpers. If a stop engages the tread of the wheel, it ((~~shall~~)) must be of a height not less than the radius of the wheel.

(ii) When more than one crane operates on the same runway or more than one trolley on the same bridge, each crane or trolley ((~~shall~~)) must be equipped with bumpers or equivalent devices at adjacent ends subject to impact.

(g) Employee exposure to crane movement. When employees may be in the vicinity of the tracks, crane trucks ((~~shall~~)) must be equipped with personnel-deflecting guards.

(h) ((~~Pedestrian clearance.~~)) If the track area is used for employee passage or for work, a minimum clearance of three feet (0.91 m) ((~~shall~~)) must be provided between trucks or the structures of rail-mounted cranes and any other structure or obstruction. When the required clearance is not available on at least one side of the crane's trucks, the area ((~~shall~~)) must not be used and ((~~shall~~)) must be marked and identified.

(i) ((~~Warning devices.~~)) Rail-mounted cranes ((~~shall~~)) must be equipped with an effective audible and visible travel warning device which ((~~shall~~)) must be used to warn employees who may be in the path of the moving crane.

(j) The following are requirements for communications((~~.~~)):

(i) Means of communication ((~~shall~~)) must be provided between the operator's cab and the base of the gantry of all rail-mounted cranes. This requirement may be met by telephone, radio, sound-signaling system or other effective methods, but not solely by hand-signaling.

(ii) All rail-mounted cranes thirty ton and above capacity ((~~shall~~)) must be equipped with a voice hailing device (PA system) from the operator to the ground, audible within one hundred feet.

(k) Limit switch bypass systems ((~~shall~~)) must be secured during all cargo operations. Such bypass systems ((~~shall~~)) must not be used except in an emergency or during noncargo handling operations such as stowing cranes or derricks or performing repairs. When a situation requiring the use of a bypass system or the readjustment of a limit switch arises, it ((~~shall~~)) must be done only under the direction of a crane mechanic.

(l) Cranes and crane operations—Scope and application. The sections of this chapter, WAC 296-56-60083 through 296-56-60099, apply to cranes, derricks, and crane operations.

(m) ((~~Signal persons.~~)) A signal person ((~~shall~~)) must be required when a crane operator's visibility is obstructed. When a signal person is required to transmit hand signals, they ((~~shall~~)) must be in such a position that the operator can plainly see the signals.

(n) ((~~Signals.~~)) All operators and signal persons ((~~shall~~)) must use standard signals as illustrated for longshore crane operations. (See Appendices C and D, at the end of this chapter.)

(o) ((~~Signal person for power units.~~)) Where power units, such as cranes and winches are utilized and signaling is required, the operator ((~~shall~~)) must be instructed as to who is authorized to give signals. The operator ((~~shall~~)) must take signals only from such authorized person. In case of emergency, any worker ((~~shall~~)) must be authorized to give a stop signal.

(i) No draft ((~~shall~~)) must be hoisted unless the winch or crane operator can clearly see the draft itself or see the signals of any signal person associated with the operation.

(ii) Loads requiring continuous manual guidance while in motion ((~~shall~~)) must be provided with tag lines.

(p) ((~~Landing loads.~~)) Persons assisting in landing a load ((~~shall~~)) must face the load and use caution to prevent themselves from getting in a position where they may be caught between the load and a fixed object.

(8) ((~~Stabilizing of locomotive cranes. Loads may be hoisted~~)) You may hoist loads by locomotive cranes only if outriggers are in place, unless means are taken to prevent the load being carried by the truck springs of the crane.

(9) You must meet the following requirements for operations((~~.~~)):

(a) ((~~Use of cranes together.~~)) When two or more cranes hoist a load in unison, a designated person ((~~shall~~)) must direct the operation and instruct personnel in positioning, rigging of the load and movements to be made.

(b) ((~~Guarding of swing radius.~~)) Accessible areas within the swing radius of the body of a revolving crane ((~~shall~~)) must be physically guarded during operations to prevent an employee from being caught between the body of the crane and any fixed structure or between parts of the crane.

(c) ((~~Securing mobile crane components in transit.~~)) The crane's superstructure and boom ((~~shall~~)) must be secured against rotation and carried in line with the direction of travel except when negotiating turns with an operator in the cab or when the boom is supported on a dolly. The empty hook or other attachment ((~~shall~~)) must be secured.

(d) ((~~Unattended cranes.~~)) The following steps ((~~shall~~)) must be taken before leaving a crane unattended between work periods:

(i) Suspended loads, such as those hoisted by lifting magnets or clamshell buckets, ((~~shall~~)) must be landed unless the storage position or maximum hoisting of the suspended device will provide equivalent safety;

(ii) Clutches ((~~shall~~)) must be disengaged;

(iii) The power supply ((~~shall~~)) must be shut off;

(iv) The crane ((~~shall~~)) must be secured against accidental travel; and

(v) The boom ((~~shall~~)) must be lowered or secured against movement.

(e) Operating near electric power lines((~~.~~)):

(i) ((~~Clearance.~~)) Unless electrical distribution and transmission lines are deenergized and visibly grounded at point of work, or unless insulating barriers not a part of or an attachment to the crane

have been erected to prevent physical contact with lines, cranes may be operated near power lines only in accordance with the following:

(A) For lines rated 50 kV or below, minimum clearance between the lines and any part of the crane or load ((~~shall~~)) must be ten feet (3.05 m);

(B) For lines rated over 50 kV, minimum clearance between the lines and any part of the crane or load ((~~shall~~)) must be either 10 feet (3.05 m) plus 0.4 inch (10.16 mm) for each 1 kV over 50 kV, or twice the length of the line insulator, but never less than ten feet; and

(C) In transit with no load and boom lowered, the clearance ((~~shall~~)) must be a minimum of four feet (1.22 m).

(ii) ((~~Boom guards.~~)) Cage-type boom guards, insulating links or proximity warning devices may be used on cranes, but they ((~~shall~~)) must not be used in place of the clearances required by subsection (9)(e)(i) of this section.

(iii) ((~~Determination of energized lines.~~)) Any overhead line ((~~shall~~)) must be presumed to be energized until the owner of the line indicates that it is not energized.

(10) You must meet the following requirements for protection for employees being hoisted((~~.~~)):

(a) ((~~No employee shall be~~)) You must make sure no employee is hoisted by the load hoisting apparatus of a crane or derrick except:

(i) On intermodal container spreaders, equipped in accordance with this subsection; or

(ii) In a boatswain's chair or other device rigged to prevent it from accidental disengagement from the hook or supporting member; or

(iii) On a platform meeting the following requirements:

(A) Enclosed by a railing or other means providing protection equivalent to that described in WAC 296-56-60123(3). If equipped with open railings, the platform ((~~shall~~)) must be fitted with toe boards;

(B) Having a safety factor of four based on ultimate strength;

(C) Bearing a plate or permanent marking indicating maximum load rating, which ((~~shall~~)) must not be exceeded, and the weight of the platform itself;

(D) Equipped with a device to prevent access doors, when used, from opening accidentally;

(E) Equipped with overhead protection for employees on the platform if they are exposed to falling objects or overhead hazards;

(F) Secured to the load line by means other than wedge and socket attachments, unless the free (bitter) end of the line is secured back to itself by a clamp placed as close above the wedge as possible.

(b) Except in an emergency, the hoisting mechanism of all overhead and container gantry cranes used to hoist personnel ((~~shall~~)) must operate in power up and power down, with automatic brake application when not hoisting or lowering.

(c) Variable radius booms of a crane or derrick used to hoist personnel ((~~shall~~)) must be so constructed or secured as to prevent accidental boom movement.

(d) Platforms or devices used to hoist employees ((~~shall~~)) must be inspected for defects before each day's use and ((~~shall~~)) must be removed from service if defective.

(e) Employees being hoisted ((~~shall~~)) must remain in continuous sight of and communication with the operator or signal person.

(f) Operators ((~~shall~~)) must remain at the controls when employees are hoisted.

(g) Cranes ((~~shall~~)) must not travel while employees are hoisted, except in emergency or in normal tier to tier transfer of employees during container operations.

(h) When intermodal container spreaders are used to transfer employees to or from the tops of containers, the spreaders ((~~shall~~)) must be equipped with a personnel platform equipped with fixed railings, provided that the railings have one or more openings for access. The openings ((~~shall~~)) must be fitted with a means of closure, such as chains with hooks. Existing railings ((~~shall~~)) must be at least thirty-six inches (0.91 m) in height. New railings installed after October 3, 1983 ((~~shall~~)), must be forty-two inches (1.07 m), plus or minus three inches (7.62 cm), in height. The provisions of (a)(iii)(C), (D), and (F) of this subsection also apply to personnel platforms when container spreaders are used.

(i) Positive safety latch-type hooks or moused hooks ((~~shall~~)) must be used.

(j) Employees ((~~shall~~)) must not be hoisted on intermodal container spreaders while a load is engaged. Additional requirements are located in WAC 296-24-23533.

(11) You must meet the following requirements for routine ((~~inspection.~~)) inspections:

(a) Designated persons ((~~shall~~)) must visually inspect each crane and derrick on each day of use for defects in functional operating components and ((~~shall~~)) must report any defect found to the employer. ((~~The employer shall~~)) You must inform the operator of the findings.

(b) A designated person ((~~shall~~)) must thoroughly inspect all functional components and accessible structural features of each crane or device at monthly intervals.

(c) Any defects found during such inspections which may create a safety hazard ((~~shall~~)) must be corrected before further use. Repairs ((~~shall~~)) must be performed only by designated persons.

(d) A record of monthly inspections ((~~shall~~)) must be maintained for six months in or on the crane or derrick or at the terminal.

AMENDATORY SECTION (Amending WSR 99-02-024, filed 12/30/98, effective 3/30/99)

WAC 296-56-60085 Crane load and limit devices. (1) You must fit every crane with a load indicating device or alternative device in proper working condition, except as provided in subsection (8) of this section((~~, every crane shall be fitted with a load indicating device or alternative device in proper working condition~~)). The type or model or any load indicating or alternate device which is used shall provide:

(a) A direct indication in the cab of actual weight hoisted or a means of determining this by referencing a weight indication to crane ratings posted and visible to the operator. The use of a dynamometer or simple scale alone ((~~shall~~)) must not meet this requirement; or

(b) Indications in the cab according to the radius and load at the moment; or

(c) A direct means to prevent an overload from occurring.

(2) You must make sure the accuracy of the devices required by this section ((~~shall~~)) must be such that any indicated load (or limit), including the sum of actual weight hoisted and additional equip-

ment or "add ons" such as slings, sensors, blocks, etc., is within the range from no less than ninety-five percent of the actual true total load (five percent overload) to one hundred ten percent of the actual true total load (ten percent underload). Such accuracy ((~~shall~~)) must be required over the range of the daily operating variables to be expected under the conditions of use.

(3) ((~~The device shall~~)) You must make sure the device permits the operator to determine, before making any lift, that the indicating or substitute system is operative. In the alternative, if a device is so
mounted or attached to preclude such a determination, it may not be used unless it has been certified by the manufacturer to remain operable within the limits stated in subsection (2) of this section for a specific period of use. Checks for accuracy, using known values of load, ((~~shall~~)) must be performed at the time of every certification survey (see WAC 296-56-60093) and at such additional times as may be recommended by the manufacturer.

(4) You must make sure when a load indicating device or alternative system is so arranged in the supporting system (crane structure) that its failure could cause the load to be dropped, its strength ((~~shall~~)) must not be the limiting factor of the supporting system (crane structure).

(5) ((~~Marking shall be~~)) You must make sure marking is conspicuously placed giving: Units of measure in pounds or both pounds and kilograms, capacity of the indicating system, accuracy of the indicating system, and operating instructions and precautions. In the case of systems utilizing indications other than actual weights, the marking ((~~shall~~)) must include data on: The means of measurement, capacity of the system, accuracy of the system, operating instructions and precautions. If the system used provides no read-out, but it is such as to automatically cease crane operation when the rated load limit under any specific condition of use is reached, marking ((~~shall~~)) must be provided giving the make and model of the device installed, a description of what it does, how it is operated, and any necessary precautions regarding the system. All weight indications, other types of loading indications, and other data required ((~~shall~~)) must be readily visible to the operator.

(6) You must make sure all load indicating devices ((~~shall be~~)) are operative over the full operating radius. Overall accuracy ((~~shall~~)) must be based on actual applied load and not on full scale (full capacity) load.

Explanatory note((~~.~~)): For example, if accuracy of the load indicating device is based on full scale load and the device is arbitrarily set at plus or minus ten percent, it would accept a reading between ninety thousand and one hundred ten thousand pounds, at full capacity of a machine with one hundred thousand pounds, maximum rating, but would also allow a reading between zero and twenty thousand pounds, at that outreach (radius) at which the rating would be ten thousand pounds capacity—an unacceptable figure. If, however, accuracy is based on actual applied load under the same conditions, the acceptable range would remain the same with the one hundred thousand pound load but becomes a figure between nine thousand and eleven thousand pounds, a much different and acceptable condition, at the ten thousand pound load.

(7) You must make sure when the device uses the radius as a factor in its use or in its operating indications, the indicated radius

(which may be in feet and/or meters, or degrees of boom angle, depending on the system used) ((~~shall be~~)) is a figure which is within the range of a figure no greater than one hundred ten percent of the actual radius to a figure which is no less than ninety-seven percent of the actual (true) radius. A conversion chart ((~~shall~~)) must be provided whenever it is necessary to convert between degrees of radius and feet or meters.

(8) The load indicating device requirements of this section do not apply to a crane:

(a) Of trolley equipped bridge type while handling container known to be and identified as empty, or loaded, and in either case in compliance with the provisions of WAC 296-56-60103, or while hoisting other lifts by means of a lifting beam supplied by the crane manufacturer for the purpose, and in all cases within the crane rating;

(b) While handling bulk commodities or cargoes by means of clamshell bucket or magnet;

(c) While used to handle or hold hoses in connection with transfer of bulk liquids or other hose handled products; or

(d) While the crane is used exclusively to handle cargo or equipment the total actual gross weight of which is known by means of marking of the unit or units hoisted, when such total actual gross weight never exceeds eleven thousand two hundred pounds, and when eleven thousand two hundred pounds, is less than the rated capacity of the crane at the maximum outreach that is possible under the conditions of use at the time.

(9) You must install limit switches ((~~shall be installed~~)) on the main line and whip line assemblies, of all cranes and derricks, which will deactivate the hoisting power when a load reaches the upper limits of travel and at such other places as required by this chapter. Line limit switches ((~~shall~~)) must be tested prior to or at the beginning of each shift to determine if they are functioning properly. Any malfunction ((~~shall~~)) must be reported to the person in charge immediately and ((~~shall~~)) must be repaired prior to use.

AMENDATORY SECTION (Amending WSR 99-02-024, filed 12/30/98, effective 3/30/99)

WAC 296-56-60087 Winches. (1) You must guard moving winch parts which present hazards to employees ((~~shall be guarded~~)).

(2) You must make sure winches ((~~shall~~)) have clearly identifiable and readily accessible stop controls.

(3) You must secure portable winches ((~~shall be secured~~)) against accidental shifting while in use.

(4) You must fit portable winches ((~~shall be fitted~~)) with limit switches if employees have access to areas from which it is possible to be drawn into the winch.

(5) The provisions of WAC 296-56-60083 (6)(l) apply to winches.

AMENDATORY SECTION (Amending WSR 86-03-064, filed 1/17/86)

WAC 296-56-60089 Conveyors. (1) ((~~Guards.~~)) You must meet the following requirements for guards:

(a) Danger zones at or adjacent to conveyors ((~~shall~~)) must be guarded to protect employees.

(b) An elevated walkway with guardrail or equivalent means of protection ((~~shall~~)) must be provided where employees cross over moving conveyors. Suitable guarding ((~~shall~~)) must be provided when employees pass under moving conveyors.

(2) ((~~Moving parts.~~)) You must secure conveyor rollers and wheels ((~~shall be secured~~)) in position.

(3) ((~~Positioning.~~)) You must firmly place and secure gravity conveyor sections ((~~shall be firmly placed and secured~~)) to prevent them from falling.

(4) You must meet the following requirements for braking((~~.~~)):

(a) When necessary for safe operation, provisions ((~~shall~~)) must be made for braking objects at the delivery end of the conveyor.

(b) Conveyors using electrically released brakes ((~~shall~~)) must be constructed so that the brakes cannot be released until power is applied, and the brakes are automatically engaged if the power fails or the operating control is returned to the "stop" position.

(5) ((~~Stability.~~)) You must make sure portable conveyors ((~~shall be~~)) are stable within their operating ranges. When used at variable fixed levels, the unit ((~~shall~~)) must be secured at the operating level.

(6) ((~~Emergency stop devices.~~)) You must provide readily accessible stop controls ((~~shall be provided~~)) for use in an emergency whenever employees are required to walk or work in the vicinity of the conveyor. The emergency stop device ((~~shall~~)) must be available within easy reach from any position on or adjacent to the conveyor.

(7) ((~~Starting powered conveyors.~~)) You must not start powered conveyors ((~~shall not be started~~)) until all employees are clear of the conveyor or have been warned that the conveyor is about to start.

(8) ((~~Loading and unloading.~~)) You must keep the area around conveyor loading and unloading points ((~~shall be kept~~)) clear of obstructions during conveyor operations.

(9) You must meet the following requirements for lockout/tagout((~~.~~)):

(a) Conveyors ((~~shall~~)) must be stopped and their power sources locked out and tagged out during maintenance, repair, and servicing, unless power is necessary for testing.

(b) The starting device ((~~shall~~)) must be locked out and tagged out in the stop position before an attempt is made to remove the cause of a jam or overload of the conveying medium, unless it is necessary to have the power on to remove the jam.

(10) You must meet the requirements for chutes, gravity conveyors and rollers((~~.~~)):

(a) Chutes used in the manual handling of cargo ((~~shall~~)) must be adequate for the use to which they are put and ((~~shall~~)) must be kept free of splinters and sharp edges.

(b) Chutes ((~~shall~~)) must be equipped with sideboards of sufficient height to prevent cargo from falling off.

(c) Chutes and gravity roller sections ((~~shall~~)) must be firmly placed or secured to prevent displacement.

(d) Gravity rollers ((~~shall~~)) must be of sufficient strength for the weight of material which is placed upon them. Rollers ((~~shall~~)) must be locked in position to prevent them from falling or jumping out of the frame.

(e) Frames ((~~shall~~)) must be kept free of burrs and sharp edges.

(f) When necessary, provision ((~~shall~~)) must be made for braking objects at the delivery end of the roller or chute.

(11) You must meet the following requirements for safe practices((~~.~~)):

(a) Only designated persons ((~~shall~~)) must operate, repair or service powered conveyors.

(b) ((~~The employer shall~~)) You must direct employees to stay off operating conveyors.

(c) Conveyors ((~~shall~~)) must be operated only with all overload devices, guards and safety devices in place and functional.

AMENDATORY SECTION (Amending WSR 92-22-067, filed 10/30/92, effective 12/8/92)

WAC 296-56-60091 Spouts, chutes, hoppers, bins, and associated equipment. (1) You must inspect standing and running rigging and associated gear used as a permanent part of spouts, chutes or similar devices ((~~shall be inspected~~)) before each use and ((~~shall~~)) must not be used if it has any functional defects. (See WAC 296-56-60093 for certification requirements.)

(2) You must provide direct communication ((~~shall be provided~~)) between the discharge or shipboard control end of loading spouts or chutes, and the point in the terminal from which the flow of cargo is controlled.

(3) You must guard chute and hopper openings which present a hazard ((~~shall be guarded~~)) to prevent employees from falling through.

(4) You must equip the hopper with a safe walkway and safe means of access when employees are working on hoppers((~~, the hopper shall be equipped with a safe walkway and safe means of access~~)).

(5) You must equip chutes with sideboards to afford protection from falling objects when necessary for the safety of employees((~~, chutes shall be equipped with sideboards to afford protection from falling objects~~)).

(6) ((~~Chutes shall be firmly placed and secured~~)) You must firmly place and secure chutes to prevent them from falling.

(7) You must make provisions for braking objects other than bulk commodities at the delivery end of the chute when necessary for the safety of employees((~~, provisions shall be made for braking objects other than bulk commodities at the delivery end of the chute~~)).

(8) You must make sure that before an employee enters an empty bin:

(a) Personnel controlling the flow of cargo into the bin ((~~shall~~)) must be notified of the entry; and

(b) The power supply to the equipment carrying the cargo to the bin ((~~shall~~)) must be turned off, locked out and tagged.

(9) You must ensure that before an employee enters a bin containing a bulk commodity such as coal or sugar((~~, the employer shall ensure~~)) that:

(a) Personnel controlling the flow of cargo into the bin ((~~shall~~)) must be notified of the entry;

(b) The power supply to the equipment carrying the cargo to the bin ((~~shall~~)) must be turned off, locked out and tagged;

(c) The employee entering the bin ((~~shall~~)) must wear a life-line and safety harness; and

(d) A standby attendant equipped to perform a rescue ((~~shall~~)) must be continuously stationed outside the bin until the employee has left the bin.

(10) You must cover bin top openings that present a hazard to employees ((~~shall be covered~~)) to prevent employees from falling into bins.

(11) You must make sure chutes and hoppers ((~~shall be repaired~~)) are only repaired by designated persons.

(12)((~~(a)~~)) You must have a designated person inspect the equipment that is to be used before power shoveling operations begin((~~, a designated person shall inspect the equipment to be used~~)). The inspection ((~~shall~~)) must include at least the eye bolts, wires, and sheaves.

((~~(b)~~)) (a) Power shovels and associated equipment with defects affecting safe operation ((~~shall~~)) must not be used.

((~~(c)~~)) (b) Before adjustments are made to a power shovel, wire, or associated equipment, the power supply to the shovel ((~~shall~~)) must be turned off, locked out, and tagged, the belt stopped, and the hopper closed.

AMENDATORY SECTION (Amending WSR 99-02-024, filed 12/30/98, effective 3/30/99)

WAC 296-56-60093 Certification of marine terminal material handling devices. (1) ((~~The employer shall~~)) You must not use any material handling device listed in WAC 296-56-60098(8) until ((~~he/she has~~)) you have ascertained that the device has been certified, as evidenced by current and valid documents attesting to compliance with the requirements of WAC 296-56-60097 and 296-56-60098.

(2) You must make sure certification surveys are ((~~to be~~)) completed for the conditions of use found at the time such surveys are performed. Equipment owners or users may change the configurations of the equipment according to the manufacturer's specifications without affecting the established certification status for the equipment.

(3) These rules apply to employment within a marine terminal including the loading, unloading, movement, or other handling of cargo, ship's stores, or gear within the terminal or into or out of any land carrier, holding or consolidation area, or any other activity within and associated with the overall operation and functions of the terminal, such as the use and routine maintenance of facilities and equipment.

(4) You must make sure inspection and test certificates ((~~shall be~~)) are issued only for that equipment which meets or exceeds the requirements specified in these rules. All inspection and test certificates ((~~shall~~)) must be issued through the office of the assistant director of the division of consultation and compliance, department of labor and industries, and ((~~shall~~)) must be valid for a period not to exceed one year from the date of issuance.

(5) You must make sure equipment requiring certification ((~~shall be~~)) is inspected by individuals who have received a "certificate of competency" from the assistant director((~~, division of WISHA services~~)) of DOSH indicating that they are qualified and capable of performing such work.

(6) You must make sure that when deficiencies are found they ((~~shall be~~)) are noted on forms provided for such purpose by the division of consultation and compliance. Copies ((~~shall~~)) must be delivered to the owner of the equipment and the division of consultation and compliance at the headquarter's office by the person conducting such tests or inspections.

(7) You must make sure a certificate of unit test or examination of equipment ((~~shall not be~~)) is not issued for any equipment found not to be in compliance with the provisions of this chapter.

(8) You must make sure persons desiring a "certificate of competency" ((~~shall~~)) demonstrate and document their capabilities and qualifications to the assistant director of the division of consultation and compliance, who will issue certificates to those persons who have demonstrated competency. The assistant director reserves the right to revoke such certificates at any time for cause. A "certificate of competency" ((~~shall~~)) must be issued for a period of not more than three years. Applications for renewal may be made not more than sixty days prior to the expiration date shown on the certificate.

(9) The assistant director of the division of consultation and compliance or ((~~his/her~~)) their representative, reserves the right to inspect such equipment or to witness or attend any test or inspection in order to ascertain the adequacy of any certification activity performed.

(10) You must make sure, unless otherwise exempted, all cranes or derricks required to be ((~~certificated~~)) certified by these regulations ((~~shall~~)) must have a current test certificate posted in the operator's cab or station. No person ((~~shall~~)) may operate such crane or derrick unless a current valid certificate is posted.

AMENDATORY SECTION (Amending WSR 95-04-007, filed 1/18/95, effective 3/1/95)

WAC 296-56-60095 Advisory crane certification panel. (1) Any person desiring a certificate of competency for crane inspection or certification ((~~shall~~)) must make application to the assistant director of the division of consultation and compliance for the certificate of competency. The application ((~~shall~~)) must include documentation of all qualifications, including all past experience, education, training and any other factors deemed to be relevant to the application.

(2) The advisory crane certification panel ((~~shall~~)) must assist the assistant director of the division of consultation and compliance in ((~~his/her~~)) their duties under this chapter. The panel ((~~shall~~)) must consist of six members. Two members ((~~shall~~)) must represent labor, two members ((~~shall~~)) must represent management, and one member ((~~shall~~)) must be a crane expert. The sixth member ((~~shall~~)) must be chair of the panel. ((~~He/she shall~~)) The chair must be the assistant director of consultation and compliance or ((~~his/her~~)) the chair's designee. The panel ((~~shall~~)) must be responsible for advising the assistant director as to the issuance of any certificate of competency.

The panel ((~~shall~~)) must review all applications for certificates of competency. Minutes of meetings ((~~shall~~)) must be kept.

(3) In addition, the panel ((~~shall~~)) must, upon request by the assistant director, render advice concerning any matter which is relevant to crane safety. The panel ((~~shall~~)) must meet twice yearly or more often as deemed necessary by the chairman of the panel. Any panel member who is not an employee of the state of Washington ((~~shall~~)) must serve voluntarily.

AMENDATORY SECTION (Amending WSR 99-02-024, filed 12/30/98, effective 3/30/99)

WAC 296-56-60097 Unit proof load test and inspection. (1) You must make sure cranes and derricks ((~~shall be~~)) are proof load tested, rated and certified in tons (2,000 lbs. = 1 ton). Cranes and derricks ((~~shall~~)) must be inspected and unit proof load tested prior to being put into use, after any significant modification or repairs of structural parts, or when deemed necessary by the assistant director of consultation and compliance or ((~~his/her~~)) their designee. However, each crane or derrick ((~~shall~~)) must be unit proof load tested at least once during each twelve-month period. Unit proof load tests ((~~shall~~)) must be carried out by the use of weights as a dead load. When use of weights for unit proof load tests is not possible or reasonable a dynamometer or other recording test equipment may be used. Such equipment ((~~shall~~)) must be tested for accuracy with certified calibrating equipment within twelve months prior to being used and a copy of the certified calibration test ((~~shall~~)) must be made available to authorized representatives of the division of consultation and compliance upon request.

(2) The weight of the objects used for a dead load weight test ((~~shall~~)) must be certified and a record of the weight ((~~shall~~)) must be made available upon request. Any replacements or repairs deemed necessary by the person conducting a test ((~~shall~~)) must be carried out before application of the required proof load unit test.

((~~(1)~~)) (3) The proof load tests for derricks ((~~shall~~)) must be conducted as follows:

Safe Working Load	Proof Load
To 20 tons	25% in excess
20-50 tons	5 tons in excess
Over 50 tons	10% in excess of manufacturer's recommended lifting capacity.

Proof load ((~~shall~~)) must be applied at the designed maximum and minimum boom angles or radii, or if this is impractical, as close to these as practical. The angles or radii of test ((~~shall~~)) must be stated in the certificate of test. Proof loads ((~~shall~~)) must be swung as far as possible in all directions. The weight of auxiliary handling devices such as spreader bars, robots, clams, magnets, or other gear ((~~shall~~)) must be considered a part of the load. Brakes ((~~shall~~)) must be tested by holding the proof load suspended without other mechanical assistance. After satisfactory completion of a unit proof load test the derrick and all component parts thereof ((~~shall~~)) must be carefully examined and nondestructive tests may be conducted to assure that

the equipment is safe for use and has not been damaged in the unit proof load testing process.

((~~(2)~~)) (4) Unit proof load tests for cranes ((~~shall~~)) must be carried out with the boom in the least stable direction relative to the mounting, based on the manufacturer's specifications.

(5) Unit proof load tests for cranes ((~~shall~~)) must be based on the manufacturer's load ratings for the conditions of use and ((~~shall~~)) must, except in the case of bridge type cranes utilizing a trolley, consist of application of a proof load of ten percent in excess of the load ratings at maximum and minimum radius, and at such intermediate radii as the certifying authority may deem necessary in the circumstances. (The manufacturer's load ratings are usually based upon percentage of tipping loads under some conditions and upon limitations of structural competence at others, as well as on other criteria such as type of crane mounting, whether or not outriggers are used, etc. Some cranes utilizing a trolley may have only one load rating assigned and applicable at any outreach. It is important that the manufacturer's ratings be used.) Trolley equipped cranes ((~~shall~~)) must be subject to a proof load of twenty-five percent in excess of the manufacturer's load rating. In cases of foreign manufacture, the manufacturer's specifications ((~~shall~~)) must be subject to approval by the certifying authority. The weight of all auxiliary handling devices such as magnets, hooks, slings, and clamshell buckets ((~~shall~~)) must be considered part of the load.

((~~(3)~~)) (6) If the operation in which equipment is engaged never utilizes more than a fraction of the safe working load rating, the owner of the equipment may, at ((~~his/her~~)) their option, have the crane or derrick certified for and operated at a lesser maximum safe working load in keeping with the use and based on radius and other pertinent factors, however, the equipment concerned ((~~shall~~)) must be physically capable of operation at the original load rating and the load reduction ((~~shall~~)) must not be for the purpose of avoiding correction of any deficiency.

((~~(4)~~)) (7) Safe working load ratings ((~~shall~~)) must not be increased beyond the manufacturer's ratings or original design limitations without prior approval by the accredited certification agency. Such prior approval ((~~shall~~)) must be based on the manufacturer's approval of such increase or documented engineering design analysis or both. All necessary structural changes ((~~shall~~)) must be completed prior to approval by the accredited certification agency.

AMENDATORY SECTION (Amending WSR 00-21-103, filed 10/18/00, effective 2/1/01)

WAC 296-56-60098 Examination and inspection of cranes and derricks. (1) You must carry out an examination ((~~shall be carried out~~)) in conjunction with each annual unit proof load test. The accredited person, or their authorized representative, ((~~shall~~)) must make a determination as to correction of deficiencies found. The examination ((~~shall~~)) must include the following: (Refer to WAC 296-56-60093(8) for definition of accredited person.)

(a) All functional operating mechanisms ((~~shall~~)) must be examined for improper function, maladjustment, and excessive component wear, with particular attention to sheaves, pins, and drums. The ex-

aminations ((~~shall~~)) must include operation with partial load, in which all functions and movements, including maximum possible rotation in both directions, are checked.

(b) All safety devices ((~~shall~~)) must be examined for malfunction.

(c) Lines, tanks, valves, drains, pumps, and other parts of air or hydraulic systems ((~~shall~~)) must be examined for deterioration or leakage.

(d) Rope reeving ((~~shall~~)) must comply with the manufacturer's recommendations.

(e) Deformed, cracked, or excessively corroded members in crane structure and boom ((~~shall~~)) must be repaired or replaced as necessary.

(f) Loose bolts, rivets, or other connections ((~~shall~~)) must be corrected.

(g) Worn, cracked, or distorted parts affecting safe operation ((~~shall~~)) must be corrected.

(h) All brakes, used to control the load, boom or travel of the crane, ((~~shall~~)) must be tested. Air, hydraulic, or electrically operated brakes ((~~shall~~)) must be of such design as to set and stop the load if the source of power fails.

(i) Brake and clutch system parts, linings, pawls, and ratchets ((~~shall~~)) must be examined for excessive wear and free operation.

(j) Load, boom angle, or other indicators ((~~shall~~)) must be checked over their full range. Defects in such indicators ((~~shall~~)) must be immediately corrected.

(k) Where used, clamshell buckets or other similar equipment, such as magnets, ((~~shall~~)) must be carefully examined in all respects, with particular attention to closing line wires and sheaves. The accredited person may supplement such examination by requesting any operational tests deemed appropriate.

(l) Careful examination of the junction areas of removable boom sections, particularly for proper seating, cracks, deformities, or other defects in securing bolts and in the vicinity of such bolts, ((~~shall~~)) must be made.

(m) All platforms, steps and footwalks located on cranes where workers are exposed to the hazard of slipping ((~~shall~~)) must be of a nonslip material. Wire rope used for railings on cranes ((~~shall~~)) must be kept taut at all times.

Note: In critical areas such as footwalks along booms, a grating material should be used.

(n) No counterweights in excess weight of the manufacturer's specifications ((~~shall~~)) must be fitted or used.

(o) Such other examination or supplemental functional tests ((~~shall~~)) must be made as may be deemed necessary by the accredited person under the circumstances.

(2) You must meet the following requirements for wire rope((~~.~~)):

(a) All wire rope ((~~shall~~)) must be inspected at least once a month, dependent upon conditions to which the wire ropes are subjected, and at intervals not exceeding a twelve-month period. Records of inspection of wire rope ((~~shall~~)) must be kept and ((~~shall~~)) must be available to the department of labor and industries representative. Records ((~~shall~~)) must be kept for one year. Refer to the general safety and health standards, WAC 296-24-24013.

(b) Wire rope ((~~shall~~)) must not be used if in any length of eight diameters, the total number of visible broken wires exceeds ten percent of the total number of wires, or if the rope shows other signs

of excessive wear, corrosion, or defect. Particular attention ((~~shall~~)) must be given to the condition of those sections of wire rope adjacent to any terminal connections, those sections exposed to abnormal wear, and those sections not normally exposed for examination.

(c) Documentation available for inspection ((~~shall~~)) must include wire rope test certificates relating to any replacements made since the last unit test or annual examination as required.

(d) Wire rope and replacement wire rope ((~~shall~~)) must be of the same size, same or better grade, and same construction as originally furnished by the equipment manufacturer or contemplated in the design, unless otherwise recommended by the equipment or wire rope manufacturer due to actual working conditions. In the absence of specific requirements, wire rope ((~~shall~~)) must be of a size and construction suitable for the purpose, and ((~~shall~~)) must have the capacity to handle five times the heaviest expected load, verified by wire rope test certificate.

(e) Wire rope in use on equipment previously constructed and prior to initial certification of said equipment ((~~shall~~)) must not be required to be tested but ((~~shall~~)) must be subject to thorough examination at the time of initial certification of the equipment.

(3)((~~(a)~~)) You must meet the following requirements for accessory components((~~.~~)):

(a) Container spreader bar twist locks ((~~shall~~)) must be carefully examined periodically and at the time of annual examination and inspection. Cracked or deformed hooks ((~~shall~~)) must be discarded immediately and not reused.

(b) Crane hooks and container spreader bar twist lock. Magnetic particle or other suitable crack detecting inspection ((~~shall~~)) must be performed at least once each year. When testing by X ray, the pertinent provisions of the Nuclear Regulatory Commission's standards for protection against radiation, relating to protection against occupational radiation exposure, ((~~shall~~)) must apply.

(4) You must make sure, in the event that heat treatment of any loose gear is recommended by the manufacturer, the latest heat treatment certificate attesting to compliance with the manufacturer's specifications ((~~shall~~)) must be part of the available documentation. Heat treatment ((~~shall~~)) must be carried out in accordance with the specifications of the manufacturer by persons competent to perform such work.

(5) You must make sure replacement parts ((~~shall be~~)) are of equal or better quality than the original equipment and suitable for the purpose. Repairs or modifications ((~~shall~~)) must be such as to render the equipment equal to or better than the original construction or design.

(6) You must make sure, in cases of foreign manufactured cranes, there ((~~shall be~~)) is an owner's warranty that the design is adequate for the intended use. The warranty ((~~shall~~)) must be based on a thorough examination of the design specifications by a registered professional engineer familiar with the equipment.

(7) You must make sure the certifications required by this section ((~~shall be~~)) are performed in accordance with WAC 296-56-60093 by persons accredited by the assistant director of ((~~WISHA services~~)) DOSH.

(8) You must make sure the marine terminal material handling devices listed below ((~~shall be~~)) are certified in the following manner:

(a) Each crane and derrick ((~~shall~~)) must be tested and examined as a unit annually. A copy of the certificate of tests and examinations ((~~shall~~)) must be posted in the crane operator's cab.

(b) Bulk cargo spouts and suckers, together with any portable extensions and rigging or outriggers supporting them vertically, ((~~shall~~)) must be examined annually. Certificates attesting to the required examination ((~~shall~~)) must be made readily available for inspection.

(c) Vertical pocket or bucket conveyors such as banana, sugar, and grain marine legs (other than those within a grain elevator structure) used within a marine terminal facility ((~~shall~~)) must be examined annually. The annual examination ((~~shall~~)) must include all supporting structures, rigging, mechanical components and observation of all steps of operations. Certificates attesting to the required examinations ((~~shall~~)) must be readily available for inspection.

(d)((~~(i)~~)) House fall cargo-handling gear ((~~shall~~)) must be proof load tested as a unit upon initial certification and every fourth year thereafter.

(i) An examination ((~~shall~~)) must be carried out in conjunction with each unit proof load test and annually thereafter. The unit test ((~~shall~~)) must consist of a proof load of twenty-five percent in excess of the rated safe working load. Examinations ((~~shall~~)) must include all supporting structures and components. Certificates attesting to the required tests and examinations ((~~shall~~)) must be readily available for inspection.

(ii) House fall span beams or other house fall block supports ((~~shall~~)) must be marked with the safe working load, which ((~~shall~~)) must not be exceeded.

(e) You must meet the following requirements for special gear((~~.~~)):

(i) Special stevedoring gear provided by the employer, the strength of which depends upon components other than commonly used stock items such as shackles, ropes or chains, ((~~shall~~)) must be tested as a unit in accordance with the following table before initially being put into use (see Table A). In addition, any special stevedoring gear that suffers damage necessitating structural repair ((~~shall~~)) must be inspected and retested after repair and before being returned to service.

Table A

Safe Working Load	Proof Load
Up to 20 short tons	25 percent in excess
Over 20 to 50 short tons	5 short tons in excess
Over 50 short tons	10 percent in excess

(ii) Special stevedoring gear provided by the employer that has a SWL of five short tons (10,000 or 4.54 metric tons) or less ((~~shall~~)) must be inspected and tested as a unit before initial use according to (d) and (e) of this subsection or by a designated person (see Table A).

(iii) Every spreader not a part of ship's gear and used for hoisting intermodal containers ((~~shall~~)) must be tested to a proof load equal to twenty-five percent in excess of its rated capacity. Additionally, any spreader which suffers damage necessitating structural repair ((~~shall~~)) must be retested after repair and before being returned to service.

(iv) Certificates attesting to the required tests ((~~shall~~)) must be available for inspection.

(v) All cargo handling gear covered by this section with a SWL greater than five short tons (10,000 lbs. or 4.54 metric tons) ((~~shall~~)) must be proof load tested according to Table A every four years in accordance with subsection (7) of this section or by a designated person.

(f) Wire rope and loose gear used for material handling ((~~shall~~)) must be tested and certified before being placed into use in accordance with the provisions of WAC 296-56-60097. Certificates attesting to the required tests, inspections and examinations ((~~shall~~)) must be available.

(9) ((~~Disassembly and reassembly of equipment does not require recertification of the equipment~~)) You do not need to recertify equipment that has been disassembled and reassembled provided that the equipment is reassembled and used in a manner consistent with its certification.

(10) Equipment certified in Washington and transferred to a site in another state does not require recertification in this state upon its return, until the next inspection or examination becomes due as if it had not been moved.

(11) You must make sure certification procedures ((~~shall not be~~)) are not construed as a substitute for, or cause for elimination of, normal operational inspection and maintenance routine throughout the year.

(12)((~~(a)~~)) You must make sure every unit of equipment requiring annual certification ((~~shall have~~)) has had such annual certification within the previous twelve months.

(a) Equipment requiring annual certification ((~~shall~~)) must have had such annual certification within the previous twelve months, except that no annual certification is required within twelve months after any required certification. Annual examinations for certification may be accomplished up to one month early without effect on subsequent due dates.

(b) When certified equipment is out of service for six months or more beyond the due date of a certification inspection, an examination equivalent to an initial certification, including unit proof load test, ((~~shall~~)) must be performed before the equipment reenters service.

(13) You must make sure loose gear ((~~shall~~)) bears a legible mark indicating that it has been tested (see WAC 296-56-60097). Single sheave blocks ((~~shall~~)) must be marked with safe working loads and proof test loads. Marks relating to testing ((~~shall~~)) must be identifiable on the related certificates, which ((~~shall~~)) must be available.

(14) The certification requirements of this section do not apply to the following equipment:

(a) Industrial trucks and small industrial crane trucks; and

(b) Any straddle truck not capable of straddling two or more intermodal containers sixteen feet (4.88 m) in width.

(15) You must meet the following requirements for a safe working load((~~.~~)):

(a) The safe working load of gear as specified in this section ((~~shall~~)) must not be exceeded.

(b) All cargo handling gear provided by the employer with a safe working load greater than five short tons (10,000 lbs. or 4.54 metric tons) ((~~shall~~)) must have its safe working load plainly marked on it.

AMENDATORY SECTION (Amending WSR 85-10-004, filed 4/19/85)

WAC 296-56-60099 Hand tools. (1) You must maintain hand tools used by employees ((~~shall be maintained~~)) in safe operating condition.

(2)((~~(a)~~)) You must make sure hand-held portable electric tools ((~~shall be~~)) are equipped with switches that must be manually held in a closed position to operate the tool.

((~~(b)~~)) (a) Portable power-driven circular saws ((~~shall~~)) must be equipped with guards above and below the base plate or shoe.

(b) The upper guard ((~~shall~~)) must cover the saw to the depth of the teeth, except for the minimum arc needed to permit the base to be tilted for bevel cuts.

(c) The lower guard ((~~shall~~)) must cover the saw to the depth of the teeth, except for the minimum arc needed to allow proper retraction and contact with the work. When the tool is withdrawn from the work, the lower guard ((~~shall~~)) must automatically and instantly return to the covering position.

(3) You must make sure only cutting tools ((~~shall be~~)) are used to cut metal strapping or banding used to secure cargo.

((~~PART F—SPECIALIZED TERMINALS~~))

NEW SECTION

WAC 296-56-60100 Specialized terminals.

Summary

This section applies to all specialized terminals in your workplace.

Your responsibility: To protect employees from hazards in specialized terminals in your workplace.

You must meet the requirements…	**in this section:**
General	WAC 296-56-60101
Terminals handling intermodal containers or roll-on roll-off operations	WAC 296-56-60103
Grain elevator terminals	WAC 296-56-60105
Terminal facilities handling menhaden and similar species of fish	WAC 296-56-60107

AMENDATORY SECTION (Amending WSR 09-15-144, filed 7/21/09, effective 9/1/09)

WAC 296-56-60103 Terminals handling intermodal containers or roll-on roll-off operations. (1) You must make sure every intermodal container ((~~shall be~~)) is legibly and permanently marked with:

(a) The weight of the container when empty, in pounds;

(b) The maximum cargo weight the container is designed to carry, in pounds; and

(c) The sum of the maximum weight of the container with cargo, in pounds (gross container capacity).

(2) You must make sure no container ((~~shall be~~)) is hoisted by any crane or derrick unless the following conditions have been met:

(a) ((~~The employer shall~~)) You must ascertain from the carrier whether a container to be hoisted is loaded or empty. Empty containers ((~~shall~~)) must be identified before loading or discharge in such a manner as will inform every supervisor and foreman on the site and in charge of loading or discharging, and every crane or other hoisting equipment operator and signalman, if any, that the container is empty. Methods of identification may include cargo plans, manifests or markings on the container.

(b) In the case of a loaded container:

(i) The actual gross weight ((~~shall~~)) must be plainly marked so as to be visible to the crane operator, other hoisting equipment operator, signalman, and to every supervisor and foreman on the site and in charge of the operation; or

(ii) The cargo stowage plan or equivalent permanently recorded display serving the same purpose, containing the actual gross weight and the serial number or other positive identification of that specific container, ((~~shall~~)) must be provided to the crane or other hoisting equipment operator and signalman, if any, and to every supervisor and foreman on the site and in charge of the operation.

(c) Every outbound loaded container which is received at a marine terminal ready to load aboard a vessel without further consolidation or loading ((~~shall~~)) must be weighed to obtain the actual gross weight before being hoisted.

(d)((~~(i)~~)) When container weighing scales are located at a marine terminal, any outbound container with a load consolidated at that terminal ((~~shall~~)) must be weighed to obtain an actual weight before being hoisted.

((~~(ii)~~)) (i) If the terminal has no scales, the actual gross weight may be calculated on the basis of the container's contents and the container's empty weight. The weights used in the calculation ((~~shall~~)) must be posted conspicuously on the container, with the name of the person making the calculation and the date.

((~~(iii)~~)) (ii) Container weights ((~~shall~~)) must be subject to random sample weight checks at the nearest weighing facility. In cases where such weight checks or experience otherwise indicate consistently inaccurate weights, the weight of containers so calculated at the source from which the inaccurate weights originated ((~~shall~~)) must no longer be recognized as true gross weights. Such containers ((~~shall~~)) must not be hoisted unless actual gross weights have been obtained by weighing.

(e) The following containers are exempted from the requirements of (c) and (d) of this subsection:

(i) Open type vehicle containers.

(ii) The container is marked on the outside in such a manner that an employee can readily discern that the container is carrying vehicles.

(iii) Containers built specifically for the carriage of compressed gases.

(iv) The container carries only completely assembled vehicles and no other cargo.

(v) The vehicles were loaded into the container at the marine terminal.

(f) The weight of loaded inbound containers from foreign ports ((~~shall~~)) must be determined by weighing or by the method of calculation described in (d)(ii) of this subsection or by shipping documents.

(g) Any scale used within Washington state to weigh containers for the purpose of the requirements of this section ((~~shall~~)) must meet the accuracy standards of the state or local public authority in which the scale is located.

(3) You must make sure no container ((~~shall be~~)) is hoisted if its actual gross weight exceeds the weight marked as required in subsection (1)(c) of this section, or if it exceeds the capacity of the crane or other hoisting device intended to be used.

(4)((~~(a)~~)) You must make sure there are marked or designated areas ((~~shall be~~)) set aside within a container or roll-on roll-off terminal for passage of employees to and from active cargo transfer points, except where you provide transportation to and from those points ((~~is provided by the employer~~)).

((~~(b) The employer shall~~)) (a) You must direct employees to stay clear of the area beneath a suspended container.

(b) Employees ((~~shall~~)) must stay clear of the area beneath a suspended container.

(5) You must make sure each employee working in the immediate area of container handling equipment or in the terminal's traffic lanes ((~~shall~~)) wears a high visibility vest (or equivalent protection).

Note to subsection (5): High visibility vests or equivalent protection means high visibility/retroreflective materials which are intended to provide conspicuity of the user by day through the use of high visibility (fluorescent) material and in the dark by vehicle headlights through the use of retroreflective material. The minimum area of material for a vest or equivalent protection is .5m(2)(760 in.(2)) for fluorescent (background) material and .13m(2)(197 in.(2)) for retroreflective material. Vests or equivalent protection, such as high visibility/retro-reflective coveralls, that are available for industrial use, may also be acceptable.

(6) You must make sure containers ((~~shall be~~)) are handled using lifting fittings or other arrangements suitable and intended for the purposes as set forth in (a) and (c) of this subsection, unless when damage to an intermodal container makes special means of handling necessary.

(a) Loaded intermodal containers of twenty feet (6.1 m) or more in length ((~~shall~~)) must be hoisted as follows:

(i) When hoisting by the top fittings, the lifting forces ((~~shall~~)) must be applied vertically from at least four top fittings or by means which will safely lift the container without damage. The lifting fittings provided ((~~shall~~)) must be used.

(A) The container being lifted is an ISO closed box container;

(B) The condition of the box is sound;

(C) The speed of hoisting and lowering is moderated when heavily ladened containers are encountered;

(D) The lift angle is at eighty to ninety degrees;

(E) The distance between the lifting beam and the load is at least eight feet and 2.4 inches (2.5 m); and

(F) The length of the spreader beam is at least 16.3 feet (5 m) for a twenty-foot container, and at least 36.4 feet (11.1 m) for a forty-foot container.

(ii) If hoisted from bottom fittings, the hoisting connections ((~~shall~~)) must bear on the fittings only, making no other contact with the container. The angles of the four bridle legs ((~~shall~~)) must not be less than thirty degrees to the horizontal in the case of forty foot (12.2 m) containers, thirty-seven degrees in the case of thirty foot (9.1 m) containers, or forty-five degrees in the case of twenty foot (6.1 m) containers.

(iii) Lifting containers by fork lift trucks or by grappling arms from above or from one side may be done only if the container is designed for this type of handling.

(b) Other means of hoisting may be used only if the containers and hoisting means are designed for such use.

(c)((~~(i)~~)) When using intermodal container spreaders that employ lanyards for activation of load disengagement, all possible precautions ((~~shall~~)) must be taken to prevent accidental release of the load. ((~~(ii)~~)) Intermodal container spreader twistlock systems ((~~shall~~)) must be designed and used so that a suspended load cannot accidentally be released.

(d) Flat bed trucks or container chassis used to move intermodal containers ((~~shall~~)) must be equipped with pins, flanges, or other means to prevent the container from shifting.

(e) Flat bed, low boy trailers (mafis) and other similar equipment used to transport containers ((~~shall~~)) must be marked with their cargo capacities and ((~~shall~~)) must not be overloaded.

(f) Each tractor ((~~shall~~)) must have all brake air lines connected when pulling trailers equipped with air brakes and ((~~shall~~)) must have the brakes tested before commencing operations.

(7)((~~(a)~~)) You must inspect intermodal containers ((~~shall be inspected~~)) for defects in structural members or fittings before handling. ((~~(b)~~)) Any intermodal container found to be unsafe ((~~shall~~)) must be identified as such, promptly removed from service and repaired before being returned to service.

(8) You must make sure containers ((~~shall not be~~)) are not hoisted unless all engaged chassis twist locks are released.

(9) ((~~Vertical tandem lifts.~~)) You must meet the following requirements ((~~apply to~~)) for operations involving the lifting of two or more intermodal containers by the top container ((~~(vertical tandem lifts of VTLs)~~)), also known as vertical tandem lifts (VTLs).

(a) Each employee involved in VTL operations ((~~shall~~)) must be trained and competent in the safety-related work practices, safety procedures, and other requirements in this section that pertain to their respective job assignments.

(b) No more than two intermodal containers may be lifted in a VTL.

(c) Before the lift begins, ((~~the employer shall~~)) you must ensure that the two containers lifted as part of a VTL are empty.

Note: The lift begins immediately following the end of the prelift required by subsection (9)(c) of this section. Thus, the weight may be determined during the prelift using a load indicating device meeting WAC 296-56-60085 (1)(a) on the crane being used to the lift the VTL.

(d) The lift ((~~shall~~)) must be performed using either a shore-based container gantry crane or another type of crane that:

(i) Has the precision control necessary to restrain unintended rotation of the containers about any axis;

(ii) Is capable of handling the load volume and wind sail potential of VTLs; and

(iii) Is specifically designed to handle containers.

(e) ((~~The employer shall~~)) You must ensure that the crane operator pauses the lift when the vertically coupled containers have just been lifted above the supporting surface to assure that each interbox connector is properly engaged.

(f) Containers below deck may not be handled as a VTL.

(g) VTL operations may not be conducted when the wind speed exceeds the lesser of:

(i) Fifty-five km/h (thirty-four mph or thirty knots); or

(ii) The crane manufacturer's recommendation for maximum wind speed.

(h) ((~~The employer shall~~)) You must ensure that each interbox connector used in a VTL operation:

(i) Automatically locks into corner castings on containers but only unlocks manually (manual twistlocks or latchlocks are not permitted);

(ii) Is designed to indicate whether it is locked or unlocked when fitted into a corner casting;

(iii) Locks and releases in an identical direction and manner as all other interbox connectors in the VTL;

(iv) Has been tested and certificated by a competent authority of this chapter (for interbox connectors that are a part of a vessel's gear) or WAC 296-56-60093 (for other interbox connectors):

(A) As having a load-bearing surface area of eight hundred mm\two\ when connected to a corner casting with an opening that is sixty-five mm wide; and

(B) As having a safe working load of ninety-eight kN (ten thousand kg) with a safety factor of five when the load is applied by means of two corner castings with openings that are sixty-five mm wide or equivalent devices;

(v) Has a certificate that is available for inspection and that attests that the interbox connector meets the strength criteria given in subsection (9)(h)(iv) of this section; and

(vi) Is clearly and durably marked with its safe working load for lifting and an identifying number or mark that will enable it to be associated with its test certificate.

(i) Reserved.

(j) ((~~The employer shall~~)) You must ensure that each container and interbox connector used in a VTL and each corner casting to which a connector will be coupled is inspected immediately before use in the VTL.

(i) Each employee performing the inspection ((~~shall~~)) must be capable of detecting defects or weaknesses and be able to assess their importance in relation to the safety of VTL operations.

(ii) The inspection of each interbox connector ((~~shall~~)) must include: A visual examination for obvious structural defects, such as cracks, a check of its physical operation to determine that the lock is fully functional with adequate spring tension on each head; and a check for excessive corrosion and deterioration.

(iii) The inspection of each container and each of its corner castings ((~~shall~~)) must include: A visual examination for obvious

structural defects, such as cracks, a check for excessive corrosion and deterioration; and a visual examination to ensure that the opening to which an interbox connector will be connected has not been enlarged, that the welds are in good condition, and that it is free from ice, mud, or other debris.

(iv) ((~~The employer shall~~)) You must establish a system to ensure that each defective or damaged interbox connector is removed from service.

(v) An interbox connector that has been found to be defective or damaged ((~~shall~~)) must be removed from service and may not be used in VTL operations until repaired.

(vi) A container with a corner casting that exhibits any of the problems listed in subsection (9)(j)(iii) of this section may not be lifted in a VTL.

(k) No platform container may be lifted as part of a VTL unit.

(10) You must meet the following requirements for transporting vertically coupled containers((~~.~~)):

(a) Equipment other than cranes used to transport vertically connected containers ((~~shall~~)) must be either specifically designed for this application or evaluated by a qualified engineer and determined to be capable of operating safely in this mode of operation.

(b) ((~~The employer shall~~)) You must develop, implement, and maintain a written plan for transporting vertically connected containers. The written plan ((~~shall~~)) must establish procedures to ensure safe operating and turning speeds and ((~~shall~~)) must address all conditions in the terminal that could affect the safety of VTL-related operations, including communication and coordination among all employees involved in these operations.

(11) ((~~Safe work zone. The employer shall~~)) You must establish a safe work zone within which employees may not be present when vertically connected containers are in motion.

(a) The safe work zone ((~~shall~~)) must be sufficient to protect employees in the event that a container drops or overturns.

(b) The written transport plan required by subsection (10)(b) of this section ((~~shall~~)) must include the safe work zone and procedures to ensure that employees are not in this zone when a VTL is in motion.

AMENDATORY SECTION (Amending WSR 05-03-093, filed 1/18/05, effective 3/1/05)

WAC 296-56-60107 Terminal facilities handling menhaden and similar species of fish. (1)((~~(a)~~)) You must make sure tanks in terminal areas used for receiving or storing bailwater for recirculating into vessel holds in discharging operations ((~~shall be~~)) are opened or ventilated to minimize contamination of water circulated to the vessel.

(a) Bailwater tanks ((~~shall~~)) must be thoroughly drained upon completion of each day's operations and ((~~shall~~)) must be left open to the air. Drainage is unnecessary when bailwater has been treated to remove hydrogen sulfide-producing contaminants and the efficiency of such treatment has been established.

(b) Before employees enter a dock tank, it shall first be drained, rinsed and tested for hydrogen sulfide and oxygen deficiency. Employees ((~~shall~~)) must not enter the tank when the hydrogen sulfide

level exceeds twenty ppm or oxygen content is less than nineteen and one-half percent, except in emergencies.

(c) Tests ((~~shall~~)) must be conducted by designated personnel with suitable test equipment and respiratory protective equipment complying with the provisions of this chapter and chapter 296-842 WAC.

(2) You must make sure pipelines and hoses on the dock or terminal used for receiving and circulating used bailwater ((~~shall be~~)) are completely drained upon completion of each day's operation and left open to the air.

(3) You must make sure at least four units of respiratory protective equipment consisting of supplied-air respirators or self-contained breathing apparatus complying with the requirements of chapter 296-842 WAC ((~~shall be~~)) are available in a suitably labeled cabinet for immediate use in case of an emergency caused by oxygen deficiency or hydrogen sulfide. Any employee entering a tank in an emergency ((~~shall~~)) must, in addition to respiratory protective equipment, wear a lifeline and safety harness to facilitate rescue. At least two other employees, similarly equipped, ((~~shall~~)) must be continuously stationed outside the tank to observe and to provide rescue services.

(4) You must make sure the plant superintendent and foremen ((~~shall be~~)) are trained and knowledgeable about the hazards of hydrogen sulfide and oxygen deficiency. They ((~~shall~~)) must be trained in the use of appropriate respiratory and other protective equipment, and in rescue procedures. Other supervisory plant personnel ((~~shall~~)) must be informed of these hazards and instructed in the necessary safety measures, including use of respiratory and rescue equipment.

(5) You must make sure supervisory personnel ((~~shall be~~)) are on hand at dockside to supervise discharging of bailwater from vessels.

((~~PART G—PERSONAL PROTECTION~~))

NEW SECTION

WAC 296-56-60108 Personal protection.

Summary

This section applies to all personal protection equipment in your workplace.

Your responsibility: To protect employees from hazards in your workplace.

You must meet the requirements…	**in this section:**
Eye protection	WAC 296-56-60109
Respiratory protection	WAC 296-56-60110
Head protection	WAC 296-56-60111
Foot protection	WAC 296-56-60113
Other protective measures	WAC 296-56-60115

You must meet the requirements…	in this section:
Payment for protective equipment	WAC 296-56-60116
Maintenance and load limits	WAC 296-56-60117
Protection from falling	WAC 296-56-60119
Minimum safety requirements for docks and dock facilities	WAC 296-56-60121
Access to vessels	WAC 296-56-60122
Guarding of edges	WAC 296-56-60123
Clearance heights	WAC 296-56-60125
Cargo doors	WAC 296-56-60127
Platforms and skids	WAC 296-56-60129
Elevators and escalators	WAC 296-56-60131
Manlifts	WAC 296-56-60133

AMENDATORY SECTION (Amending WSR 10-09-088, filed 4/20/10, effective 6/1/10)

WAC 296-56-60109 Eye protection. (1)((~~(a) When employees perform work hazardous to the eyes, the employer shall~~)) You must provide eye protection equipment that complies with ANSI Z87.1, American National Standard Practice for Occupational and Educational Eye and Face Protection, edition 1989, revision 1998, or edition 2003 when employees perform work hazardous to the eyes.

((~~Employers~~)) (a) You may provide alternate eye and face protection if they can demonstrate such devices are at least as effective as those constructed in accordance with one of the above consensus standards.

(b) For employees wearing corrective spectacles, eye protection equipment required by (a) of this subsection ((~~shall~~)) must be of a type which can be worn over spectacles. Prescription ground safety lenses may be substituted if they provide equivalent protection.

(c) For additional requirements covering eye protection against radiant energy, see WAC 296-56-60235(8).

(2) You must maintain eye protection equipment ((~~shall be maintained~~)) in good condition.

(3) You must clean and disinfect used eye protection equipment ((~~shall be cleaned and disinfected~~)) before reissuance to another employee.

AMENDATORY SECTION (Amending WSR 14-03-013, filed 1/7/14, effective 2/10/14)

WAC 296-56-60111 Head protection. (1) You must make sure employees exposed to impact, falling or flying objects, or electric shocks or burns ((~~shall~~)) wear protective hats.

(2) ((~~The employer~~)) You must ensure that all protective helmets comply with any of the following consensus standards:

((~~•~~)) (a) ANSI Z89.1-2009, American National Standard for Industrial Head Protection.

((~~•~~)) (b) ANSI Z89.1-2003, American National Standard for Industrial Head Protection.

((~~•~~)) (c) ANSI Z89.1-1997, American National Standard for Industrial Head Protection.

((~~•~~)) (d) ANSI Z89.1-1986, American National Standard for Personnel Protection—Protective Headwear for Industrial Workers—Requirements.

((~~Employers~~)) (e) You may use alternate head protection if ((~~they~~)) you can demonstrate such devices are at least as effective as those constructed in accordance with one of the above consensus standards.

(3) You must clean and disinfect protective hats previously worn ((~~shall be cleaned and disinfected~~)) before issuance by the employer to another employee.

AMENDATORY SECTION (Amending WSR 10-09-088, filed 4/20/10, effective 6/1/10)

WAC 296-56-60113 Foot protection. (1) ((~~The employer shall~~)) You must ensure that each affected employee wears protective footwear when working in areas where there is a danger of foot injuries due to falling or rolling objects or objects piercing the sole.

(2) ((~~The employer~~)) You must ensure that all protective footwear complies with one of the following consensus standards:

((~~•~~)) (a) ASTM F-2412-2005, Standard Test Methods for Foot Protection, and ASTM F-2413-2005, Standard Specification for Performance Requirements for Protective Footwear.

((~~•~~)) (b) ANSI Z41-1999, American National Standard for Personal Protection—Protective Footwear.

((~~•~~)) (c) ANSI Z41-1991, American National Standard for Personal Protection—Protective Footwear.

((~~Employers~~)) (d) You may use alternate footwear if ((~~they~~)) you can demonstrate it is at least as effective as those constructed in accordance with one of the above consensus standards.

(3) ((~~The employer shall,~~)) You must make safety shoes readily available to all employees through means such as vendors or local stores((~~, make safety shoes readily available to all employees~~)).

AMENDATORY SECTION (Amending WSR 09-15-144, filed 7/21/09, effective 9/1/09)

WAC 296-56-60115 Other protective measures. (1) You must meet the following requirements for protective clothing((~~.~~)):

(a) Employees performing work that requires special protective clothing ((~~shall~~)) must be directed by the employer to wear the necessary special protective clothing.

(b) When necessary, protective clothing previously worn ((~~shall~~)) must be cleaned and disinfected before reissuance.

(2) You must meet the following requirements for personal flotation devices((~~.~~)):

(a) ((~~The employer shall~~)) You must provide((~~,~~)) and ((~~shall~~)) direct the wearing of personal flotation devices for those employees, such as line handlers, who are engaged in work in which they may be pulled into the water:

(i) When such employees are working in isolation: or

(ii) Where physical limitations of available working space creates a hazard of falling into the water; or

(iii) Where the work area is obstructed by cargo or other obstacles so as to prevent employees from obtaining safe footing for their work.

(b) Employees working on, over or along water, where the danger of drowning exists, ((~~shall~~)) must be provided with and ((~~shall~~)) must wear approved personal flotation devices.

(i) Employees are not considered exposed to the danger of drowning when:

(A) Working behind standard height and strength guardrails;

(B) Working inside operating cabs or stations which eliminate the possibility of accidental falling into the water;

(C) Wearing approved safety belts with lifeline attached so as to preclude the possibility of falling into the water.

(ii) Prior to and after each use, personal flotation devices ((~~shall~~)) must be inspected for defects which would reduce their designed effectiveness. Defective personal flotation devices ((~~shall~~)) must not be used.

(iii) To meet the requirement of (b) of this subsection, a personal flotation device ((~~shall~~)) must be approved by the United States Coast Guard as a Type I PFD, Type II PFD, Type III PFD, or Type V PFD, or equivalent, pursuant to 46 C.F.R. 160 (Coast Guard Lifesaving Equipment Specifications) and 33 C.F.R. 175.23 (Coast Guard Table of Devices Equivalent to Personal Flotation Devices).

(c) You must meet the following requirements for life rings((~~.~~)):

(i) Along docks, walkways or other fixed installations on or adjacent to open water more than five feet deep, approved life rings with line attached ((~~shall~~)) must be provided. The life rings ((~~shall~~)) must be spaced at intervals not to exceed two hundred feet and ((~~shall~~)) must be kept in easily visible and readily accessible locations.

(ii) When employees are assigned work at other casual locations where exposure to drowning exists, at least one approved life ring with line attached ((~~shall~~)) must be provided in the immediate vicinity of the work.

(iii) Work assigned over water where the vertical drop from an accidental fall exceeds fifty feet, is subject to specific procedures approved by the department.

(iv) Lines attached to life rings ((~~shall~~)) must be at least ninety feet (27.43 m) in length, at least one-quarter inch in diameter and have a minimum breaking strength of five hundred pounds.

(v) Life rings must be United States Coast Guard approved thirty inch size (76.2 cm).

(vi) Life rings and attached lines must be maintained to retain at least seventy-five percent of their designed buoyancy and strength.

(3) ((~~Emergency facilities.~~)) You must provide emergency facilities and maintain them in good working order when employees are ex-

posed to hazardous substances which may require emergency bathing, eye washing or other facilities((~~, the employer shall provide such facilities and maintain them in good working order~~)).

(4) ((~~Employers shall~~)) You must instruct employees to report every injury, regardless of severity, to ((~~the employer~~)) you.

(5) You must meet the following requirements for stretchers((~~.~~)):

(a) There ((~~shall~~)) must be available for each vessel being worked one Stokes basket stretcher, or its equivalent, permanently equipped with bridles for attaching to the hoisting gear.

(b) Stretchers ((~~shall~~)) must be kept close to vessels and ((~~shall~~)) must be positioned to avoid damage to the stretcher.

(c) A blanket or other suitable covering ((~~shall~~)) must be available.

(d) Stretchers ((~~shall~~)) must have at least four sets of effective patient restraints in operable condition.

(e) Lifting bridles ((~~shall~~)) must be of adequate strength, capable of lifting 1,000 pounds (454 kg) with a safety factor of five, and ((~~shall~~)) must be maintained in operable condition. Lifting bridles ((~~shall~~)) must be provided for making vertical patient lifts at container berths. Stretchers for vertical lifts ((~~shall~~)) must have foot plates.

(f) Stretchers ((~~shall~~)) must be maintained in operable condition. Struts and braces ((~~shall~~)) must be inspected for damage. Wire mesh ((~~shall~~)) must be secured and have no burrs. Damaged stretchers ((~~shall~~)) must not be used until repaired.

(g) Stretchers in permanent locations ((~~shall~~)) must be mounted to prevent damage and ((~~shall~~)) must be protected from the elements if located out-of-doors. If concealed from view, closures ((~~shall~~)) must be marked to indicate the location of the ((~~life saving~~)) lifesaving equipment.

(6) You must make sure telephone or equivalent means of communication ((~~shall be~~)) are readily available.

(7) You must make sure employees working on any bridge or structure leading to a detached vessel berthing installation ((~~shall~~)) must wear United States Coast Guard approved personal flotation devices except where protected by railings, nets, or safety belts and lifelines.

(8) ((~~Life ladders.~~)) You must make sure on all docks there ((~~shall be~~)) are substantial built-in-place ladders, spaced at intervals not to exceed four hundred feet, to reach the lowest water use. When portable ladders are to be used, ladders may be bolted to the bullrail or dock structure, or ladders can be secured to an embedded eye bolt in a concrete dock surface. The immediate area where such ladders or fastenings are located ((~~shall~~)) must be painted with a bright color or of a color which contrasts with the surrounding area. There ((~~shall~~)) must be a ladder at each end of the dock.

AMENDATORY SECTION (Amending WSR 09-05-071, filed 2/17/09, effective 4/1/09)

WAC 296-56-60116 Payment for protective equipment. (1) ((~~Except as provided by subsections (2) through (6) of this section,~~)) You must provide the protective equipment, including personal protective equipment (PPE), used to comply with this part, ((~~shall be provided by the~~

~~employer~~)) at no cost to your employees, except at provided by subsections (2) through (6) of this section.

(2) ((~~The employer is~~)) You are not required to pay for nonspecialty safety-toe protective footwear (including steel-toe shoes or steel-toe boots) and nonspecialty prescription safety eyewear, provided that ((~~the employer permits~~)) you permit such items to be worn off the job site.

(3) ((~~When the employer provides metatarsal guards and allows the employee, at his or her request, to use shoes or boots with built-in metatarsal protection, the employer is~~)) You are not required to reimburse the employee for ((~~the~~)) shoes or boots when you provide metatarsal guards and allow the employee, at their request, to use shoes or boots with built-in metatarsal protection.

(4) ((~~The employer is~~)) You are not required to pay for:

(a) Everyday clothing, such as long-sleeve shirts, long pants, street shoes, and normal work boots; or

(b) Ordinary clothing, skin creams, or other items, used solely for protection from the weather, such as winter coats, jackets, gloves, parkas, rubber boots, hats, raincoats, ordinary sunglasses, and sunscreen.

(5) ((~~The employer~~)) You must pay for replacement PPE, except when the employee has lost or intentionally damaged the PPE.

(6) ((~~Where an employee provides adequate protective equipment he or she owns, the employer may allow the employee to use it and is not required to reimburse the employee for that equipment. The employer shall~~)) You may allow the employee to use protective equipment that they own if it is adequate, and you are not required to reimburse the employee for that equipment. You must not require an employee to provide or pay for ((~~his or her~~)) their own PPE, unless the PPE is excepted by subsections (2) through (6) of this section.

AMENDATORY SECTION (Amending WSR 86-03-064, filed 1/17/86)

WAC 296-56-60117 Maintenance and load limits. (1) You must maintain the structural integrity of docks, piers, wharves, terminals and working surfaces ((~~shall be maintained~~)).

(2) You must conspicuously post maximum safe load limits, in pounds per square foot (kilograms per square meter), of floors elevated above ground level, and pier structures over the water ((~~shall be conspicuously posted~~)) in all cargo areas.

Exception: Pier structures used primarily for vehicle traffic may be posted in maximum pounds per axle weight.

(3) You must make sure maximum safe load limits ((~~shall not be~~)) are not exceeded.

(4) You must maintain all walking and working surfaces in the terminal area ((~~shall be maintained~~)) in good repair.

(5) You must secure all steel plates, boards, etc., used to temporarily cover small holes or weakened surfaces ((~~shall be secured~~)) in such a manner as to prevent movement.

(6) You must barricade all large openings or weakened surfaces ((~~shall be barricaded~~)) on all exposed sides with barricades equipped with blinkers, flashing lights, or reflectors.

(7) You must light areas around bitts or cleats where workers perform their duties ((~~shall be lighted~~)) as required in this section and have a nonslip surface around each bitt or cleat.

AMENDATORY SECTION (Amending WSR 86-03-064, filed 1/17/86)

WAC 296-56-60119 Protection from falling. You must make sure employees doing maintenance work on cranes, spouts or similar types of equipment, eight feet or more above the ground or surface and not in an area that is protected by any standard safeguards such as walkways with standard railings, or ladders with protective cages, ((~~shall~~)) wear a safety belt and lanyard which can be attached to the structure.

AMENDATORY SECTION (Amending WSR 86-03-064, filed 1/17/86)

WAC 296-56-60121 Minimum safety requirements for docks and dock facilities.

Important: No provision of this section shall be construed to imply that an employer or employees are responsible for repair, construction or otherwise bringing into compliance facilities over which they have no control.

(1) ((~~Working prohibited on unsafe docks or dock facilities. Employers shall~~)) You must not allow employees to perform work on docks or dock facilities which ((~~the employer~~)) you should know do not meet the minimum safety requirements of this section.

(2) ((~~Known unsafe conditions by employees.~~)) Employees ((~~shall~~)) must not work on docks or dock facilities which they should know do not meet the minimum safety requirements of this section.

(3) ((~~Bulletin boards.~~)) You must install a safety bulletin board at each dock, pier, warehouse or designated area at the job site((~~, there shall be installed a safety bulletin board~~)).

(4) ((~~Posting of notices. It shall be the responsibility of the employer to~~)) You must post at prominent places in or adjacent to the work area, legible notices stating:

(a) The location of stretchers, blankets, first-aid equipment and telephones. (Where possible, directional arrows should point to locations.)

(b) The phone numbers of doctors, ambulance services and hospitals within the area and the phone numbers of the police department or other law enforcement agency. (Where possible these numbers ((~~shall~~)) must also be posted on or inside the cover of first-aid cabinets and kits.)

(5) ((~~Ventilation.~~)) You must ventilate all areas where employees are required to work ((~~shall be ventilated~~)) as required by the "general occupational health standards," chapter 296-62 WAC.

(6) ((~~Power outlets.~~)) You must locate power outlets installed to supply power to vessels ((~~shall be located~~)) in such a manner that the workers will not come into contact with supply lines. Unprotected power lines ((~~shall~~)) must not be driven over by equipment. If located on the underside or waterside of the bull rail, a well lighted walkway with hand rails ((~~shall~~)) must be provided to the power outlets.

AMENDATORY SECTION (Amending WSR 86-03-064, filed 1/17/86)

WAC 296-56-60122 Access to vessels. (1) ((~~Access to vessels. The employer shall~~)) You must not permit employees to board or leave any vessel, except a barge or river towboat, until the following requirements have been met:

(a) Whenever practical a gangway of not less than twenty inches wide walking surface of adequate strength, maintained and secured ((~~shall~~)) must be used. If a gangway is not practical a substantial straight ladder, extending at least thirty-six inches above the upper landing surface and adequately secured against shifting or slipping ((~~shall~~)) must be provided. When conditions are such that neither a gangway nor a straight ladder can be used, a Jacob's ladder meeting the requirements of subsection (4) of this section may be used.

(b) Each side of such gangway, and the turn table if used, ((~~shall~~)) must have a railing with a minimum height of thirty-three inches measured perpendicularly from rail to walking surface at the stanchion((~~,~~)) and a mid rail. Rails ((~~shall~~)) must be of wood, pipe, chain, wire or rope and ((~~shall~~)) must be kept taut at all times.

(c) Gangways on vessels inspected and certified by the United States Coast Guard are deemed to meet the foregoing requirements, except in cases where the vessel's regular gangway is not being used.

(d) The gangway ((~~shall~~)) must be kept properly trimmed at all times.

(e) When a fixed tread accommodation ladder is used, and the angle is low enough to require employees to walk on the edge of the treads, cleated duckboards ((~~shall~~)) must be laid over and secured to the ladder.

(f) When the lower end of a gangway overhangs the water between the ship and the dock in such a manner that there is danger of employees falling between the ship and the dock, a net or other suitable protection ((~~shall~~)) must be rigged at the foot of the gangway in such a manner as to prevent employees from falling from the end of the gangway into the water or into the surface.

(g) If the foot of the gangway is more than one foot away from the edge of the apron, the space between them ((~~shall~~)) must be bridged by a firm walkway equipped with railings, with a minimum height of thirty-three inches with midrails on both sides.

(h) Supporting bridles ((~~shall~~)) must be kept clear so as to permit unobstructed passage for employees using the gangway.

(i) When the upper end of the means of access rests on or flush with the top of the bulwark, substantial steps properly secured and equipped with at least one substantial handrail approximately thirty-three inches in height ((~~shall~~)) must be provided between the top of the bulwark and the deck.

(j) Obstructions ((~~shall~~)) must not be laid on or across the gangway.

(k) The means of access ((~~shall~~)) must be illuminated for its full length.

(l) Unless construction of the vessel makes it impossible, the means of access ((~~shall~~)) must be so located that drafts of cargo do not pass over it. Loads ((~~shall~~)) must not be passed over the means of access while employees are on it.

(2) ((~~Access to vessels in drydock or between vessels.~~)) You must make sure gangways meeting the requirements of subsection (1)(a), (b), (i), (j) and (k) of this section ((~~shall be~~)) are provided for access

from wingwall to vessel or, when two or more vessels other than barges or river towboats are lying abreast, from one vessel to another.

(3) You must meet the following requirements for access to barges and river towboats((~~.~~)):

(a) Ramps for access of vehicles to or between barges ((~~shall~~)) must be of adequate strength, provided with side boards, well maintained and properly secured.

(b) Unless employees can step safely to or from the wharf, float, barge, or river towboat, a ramp meeting the requirements of subsection (1)(a) of this section ((~~shall~~)) must be provided. When a walkway is impractical, a substantial straight ladder, extending at least thirty-six inches above the upper landing surface and adequately secured against shifting or slipping, ((~~shall~~)) must be provided. When conditions are such that neither a walkway nor a straight ladder can be used, a Jacob's ladder meeting the requirements of subsection (4) of this section may be used.

(c) The means of access ((~~shall~~)) must meet the requirements of subsection (1)(i), (j), and (k) of this section.

(4) Jacob's ladders.

(a) Jacob's ladders ((~~shall~~)) must be of the double rung or flat tread type. They ((~~shall~~)) must be well maintained and properly secured.

(b) A Jacob's ladder ((~~shall~~)) must either hang without slack from its lashings or be pulled up entirely.

AMENDATORY SECTION (Amending WSR 00-21-103, filed 10/18/00, effective 2/1/01)

WAC 296-56-60123 Guarding of edges. (1) You must meet the following requirements for vehicle protection((~~.~~)):

(a) Vehicle curbs, bull rails, or other effective barriers at least six inches (15.24 cm) in height and six inches in width, ((~~shall~~)) must be provided at the waterside edges of aprons and bulkheads, except where vehicles are prohibited. Curbs or bull rails installed after January 1, 1985, ((~~shall~~)) must be at least ten inches (22.9 cm) in height.

(b) The provisions of (a) of this subsection also apply at the edge of any fixed level above the common floor area from which vehicles may fall, except at loading docks, platforms and skids where cargo is moved by vehicles.

(2) You must meet the following requirements for employee protection((~~.~~)):

(a) Guardrails ((~~shall~~)) must be provided at locations where employees are exposed to falls of more than four feet from floor or wall openings or waterside edges, including bridges or gangway-like structures leading to pilings, vessel mooring or berthing installations.

(b) Guardrails are not required:

(i) At loading platforms and docks;

(ii) At waterside edges used for cargo or mooring line handling;

(iii) On the working sides of work platforms, skids, or similar workplaces which abut the work area; or

(iv) On railroad rolling stock, highway vehicles, intermodal containers, or similar equipment.

(c) Where guardrails are impractical due to machinery requirements or work processes, an alternate means of fall protection, such as nets, ((~~shall~~)) must be used.

(3) ((~~Criteria for guardrails.~~)) You must make sure guardrails ((~~shall~~)) meet the following criteria:

(a) ((~~They shall~~)) Guardrails must be capable of withstanding a force of at least two hundred pounds (890 N) applied in any direction at mid-span of the top rail (when used), or at the uppermost point if there is no guard rail.

(b) If not of solid baluster, grillwork, slatted, or similar construction, guardrails ((~~shall~~)) must consist of top rails and midrails. Midrails, when used, ((~~shall~~)) must be positioned at approximately half the height of the top rail.

(c) The top surface of guardrails installed before October 3, 1983, ((~~shall~~)) must be at least thirty-six inches (.091 m) high. Those installed after October 3, 1983, ((~~shall~~)) must be forty-two inches (1.07 m) high, plus or minus two inches (5.1 cm), high.

(d) Any nonrigid railing such as chain or wire rope ((~~shall~~)) must have a maximum sag, at the mid-point between posts, of not more than six inches (15.24 cm).

(e) Top rails ((~~shall~~)) must be free of sharp edges and maintained in good repair.

(f) Rail ends ((~~shall~~)) must not overhang. This does not prohibit scrollwork, boxed ends or similar nonhazardous projections.

(4) ((~~Toeboards.~~)) You must provide toeboards ((~~shall be provided~~)) when employees below could be exposed to falling objects such as tools. Toeboards ((~~shall~~)) must be at least three and one-half inches (8.9 cm) in height from top edge to floor level, and be capable of withstanding a force of fifty pounds (222 N) applied in any direction. Drainage clearance not in excess of one-eighth inch under toeboards is permitted.

(5) ((~~Stair railings.~~)) Stair railings ((~~shall~~)) must be capable of withstanding a force of at least two hundred pounds (890 N) applied in any direction, and ((~~shall~~)) must not be more than thirty-six inches (0.91 m) nor less than thirty-two inches (0.81 m) in height from the upper top rail surface to the tread surface in line with the leading edge of the tread. Railings and midrails ((~~shall~~)) must be provided at any stairway having four or more risers, as follows:

(a) For stairways less than forty-four inches (1.12 m) wide, at least one railing; and

(b) For stairways more than forty-four inches (1.12 m) but less than eighty-eight inches (2.24 m) wide, a stair rail or handrail on each side, and if eighty-eight or more inches wide, an additional intermediate handrail.

(6) ((~~Condition. Railings shall be maintained free of sharp edges and in good repair.~~)) You must maintain railings in good repair and free of sharp edges.

AMENDATORY SECTION (Amending WSR 86-03-064, filed 1/17/86)

WAC 296-56-60125 Clearance heights. You must prominently post clearance heights ((~~shall be prominently posted~~)) where the height is insufficient for vehicles or equipment.

AMENDATORY SECTION (Amending WSR 86-03-064, filed 1/17/86)

WAC 296-56-60127 Cargo doors. (1) You must meet the following requirements for mechanically operated cargo doors((~~.~~)):

(a) You must guard cargo door counterweights ((~~shall be guarded~~)).

(b) Lift trucks and cranes ((~~shall~~)) must not be used to move mechanically operated doors except when necessary during repair to the doors. Ropes or other guarding ((~~shall~~)) must be provided to prevent entry into any area if the door may fall or slide.

(c) Vertically operated doors partially opened for work or ventilation ((~~shall~~)) must be secured to prevent accidental closing.

(2) You must meet the following requirements for tackle operated cargo doors((~~.~~)):

(a) ((~~Doors shall be connected~~)) You must connect doors to their lifting tackle with shackles or other secure means.

(b) Lifting bridles and tackles ((~~shall~~)) must have a safety factor of five, based upon maximum anticipated static loading conditions.

(c) Devices ((~~shall~~)) must be provided to hold overhead doors in the open position and to secure them when closed.

(d) Lifting gear and hardware ((~~shall~~)) must be maintained in safe condition.

(e) Lifting ropes ((~~shall~~)) must be placed out of the work area and off the floor.

(3) You must meet the following requirements for horizontal sliding((~~.~~)):

(a) Horizontal sliding door rollers ((~~shall~~)) must be constructed to prevent the door from disengaging from overhead tracks.

(b) Sliding doors ((~~shall~~)) must be secured to prevent them from swinging.

AMENDATORY SECTION (Amending WSR 86-03-064, filed 1/17/86)

WAC 296-56-60129 Platforms and skids. (1) You must provide guardrails meeting the requirements of WAC 296-56-60123(3) on all open sides of platforms and skids extending from piers, transit sheds or lofts and used for landing or hooking drafts ((~~shall be provided with guardrails meeting the requirements of WAC 296-56-60123(3) on all open sides~~)). Alternate means, such as nets or safety belts and lifelines, may be used if guardrails are impractical.

(2) You must protect any employee working below a second-story platform or skid ((~~shall be protected~~)) from falling objects.

(3) You must make sure platforms and skids ((~~shall be~~)) are strong enough to bear the loads handled and ((~~shall be~~)) are maintained in safe condition. Safe working loads, which ((~~shall~~)) must be posted or marked on or adjacent to platforms and skids, ((~~shall~~)) must have a minimum safety factor of five for all parts, based upon maximum anticipated static loading conditions and the ultimate strength of the construction material.

(4) ((~~The employer shall~~)) You must provide and maintain platform and skid attachments that will prevent accidental movement of the skid or platform.

AMENDATORY SECTION (Amending WSR 92-22-067, filed 10/30/92, effective 12/8/92)

WAC 296-56-60131 Elevators and escalators. (1) ((~~"Elevator" means a permanent hoisting and lowering mechanism with a car or platform moving vertically in guides and serving two or more floors of a structure. The term excludes such devices as conveyors, tiering or piling machines, material hoists, skip or furnace hoists, wharf ramps, lift bridges, car lifts, and dumpers.~~

~~(2) "Escalator" means a power-driven continuous moving stairway principally intended for the use of persons.~~

~~(3) No~~)) You must prohibit an elevator or escalator with a defect which affects safety ((~~shall be~~)) from being used.

((~~(4)~~)) (2) You must make sure elevator safety devices shall not be overridden or made inoperable.

((~~(5)~~)) (3) You must thoroughly inspect elevators and escalators ((~~shall be thoroughly inspected~~)) at intervals not exceeding one year. Additional monthly inspections for satisfactory operation ((~~shall~~)) must be conducted by designated persons. Records of the results of the latest annual elevator inspections ((~~shall~~)) must be posted in elevators. Records of annual escalator inspections ((~~shall~~)) must be posted in the vicinity of the escalator or be available at the terminal.

((~~(6)~~)) (4) You must make sure elevator landing openings ((~~shall be~~)) are provided with doors, gates, or equivalent protection, which ((~~shall~~)) must be in place when the elevator is not at that landing, to prevent employees from falling into the shaft.

((~~(7)~~)) (5) You must post and make sure the elevator or escalator maximum load limits ((~~shall be posted and shall not be~~)) are not exceeded. Elevator load limits ((~~shall~~)) must be posted conspicuously both inside and outside of the car.

((~~(8)~~)) (6) You must make sure elevators ((~~shall be~~)) are operated only by designated persons except for automatic or door interlocking elevators which provide full shaft door closing and automatic car leveling.

AMENDATORY SECTION (Amending WSR 00-21-103, filed 10/18/00, effective 2/1/01)

WAC 296-56-60133 Manlifts. (1) ((~~Inspection.~~)) You must inspect manlifts ((~~shall be inspected~~)) monthly by a designated person. Safety switches ((~~shall~~)) must be checked weekly. Manlifts found to be unsafe ((~~shall~~)) must not be operated until repaired. Inspections ((~~shall~~)) must include at least the following:

(a) Step fastenings;
(b) Rails;
(c) Rail supports and fastenings;
(d) Roller and slides;
(e) Belt and belt tension;
(f) Handholds and fastenings;
(g) Floor landings;
(h) Guardrails;
(i) Lubrication;
(j) Safety switches;

(k) Warning signs and lights;
(l) Illumination;
(m) Drive pulley;
(n) Bottom (boot) pulley and clearance;
(o) Pulley supports;
(p) Motor;
(q) Drive mechanism;
(r) Brake;
(s) Electrical switches;
(t) Vibration and misalignment;
(u) "Skip" on up or down run when mounting the step (indicating worn gears); and
(v) Emergency exit ladders.

(2) ((~~Inspection records.~~)) You must keep inspection records ((~~shall be kept~~)) for at least one year. The record of the most recent inspection ((~~shall~~)) must be posted in the vicinity of the manlift or in the terminal.

(3) ((~~Emergency stop.~~)) You must make sure an emergency stop device ((~~shall be~~)) is available within easy reach from any position on the belt.

(4) ((~~Instructions.~~)) You must conspicuously post manlift use instructions ((~~shall be conspicuously posted~~)).

(5) ((~~Top floor warning sign and light.~~)) You must provide an illuminated sign and red light that are visible to the user ((~~shall be provided~~)) under the top floor opening of the manlift to warn the user to get off at that floor.

(6) ((~~Bottom floor warning sign.~~)) You must provide a sign visible to descending passengers ((~~shall be provided~~)) to warn them to get off at the bottom floor.

(7) ((~~Upper limit stop.~~)) You must provide an automatic stop device ((~~shall be provided~~)) to stop the manlift when a loaded step passes the top landing, except that manlifts installed after October 3, 1983, ((~~shall~~)) must have two such devices.

(8) ((~~Handholds and steps.~~)) You must provide each step ((~~shall be provided~~)) with a corresponding handhold.

(9) ((~~Emergency ladder.~~)) You must provide a fixed emergency ladder accessible from any position on the lift and meeting the requirements of WAC 296-56-60209 ((~~shall be provided~~)) for the entire run of the manlift.

(10) You must meet the following requirements for landings((~~.~~)):

(a) Clear and unobstructed landing spaces ((~~shall~~)) must be provided at each level. Manlifts constructed after October 3, 1983, that have a distance of fifty feet (15.24 m) or more between floor landings ((~~shall~~)) must have an emergency landing every twenty-five feet (7.62 m) or less of manlift travel.

(b) Open sides of emergency landings ((~~shall~~)) must be protected by guardrails.

(c) Floor landing entrances and exits ((~~shall~~)) must be guarded by mazes, self-closing gates, or equivalent protection.

(d) Landings ((~~shall~~)) must be of sufficient size and strength to support two hundred fifty pounds (1112 N).

(11) ((~~Floor opening guards.~~)) You must provide the ascending sides of manlift floor openings ((~~shall be provided~~)) with cones or bevel guards to direct the user through the openings.

(12) ((~~Maintenance.~~)) You must equip, maintain, and use manlifts ((~~shall be equipped, maintained, and used~~)) in accordance with the

manufacturer's specifications, which ((~~shall~~)) must be available at the terminal.

(13) You must meet the following requirements for bottom pulleys((~~.~~)):

(a) The lower pulley ((~~shall~~)) must be supported by the lowest landing.

(b) Sides of the bottom pulley support ((~~shall~~)) must be guarded to prevent contact with the pulley or the steps.

(14) ((~~Top clearance.~~)) You must provide a clearance of at least eleven feet (3.35 m) ((~~shall be provided~~)) between the top landing and the ceiling.

(15) ((~~Brakes.~~)) You must equip manlifts ((~~shall be equipped~~)) with brakes that are:

(a) Self-engaging;

(b) Electrically released; and

(c) Capable of stopping and holding the manlift when the descending side is loaded with the maximum rated load.

((~~PART H—MANLIFTS—ELECTRIC~~))

AMENDATORY SECTION (Amending WSR 86-03-064, filed 1/17/86)

WAC 296-56-60135 Manlifts—Electric.

Summary

This section applies to all electric manlifts in your workplace.

You must meet the requirements…	**in this section:**
Manlifts—Electric	WAC 296-56-60135
Hoistway enclosures and landings	WAC 296-56-60139
Scope and application	WAC 296-56-60141
Hoistway gates	WAC 296-56-60143
Elevator car	WAC 296-56-60145
Elevator doors	WAC 296-56-60147
Counterweight, enclosures, and fastenings	WAC 296-56-60149
Guide rails	WAC 296-56-60151
Hoisting ropes	WAC 296-56-60153
Space under hoistway	WAC 296-56-60155
Car safeties	WAC 296-56-60157
Brakes	WAC 296-56-60159
Car controls and safety devices	WAC 296-56-60161
Hoisting machine mechanisms	WAC 296-56-60167

You must meet the requirements…	in this section:
Elevator car and counterweight buffers	WAC 296-56-60169
General requirements	WAC 296-56-60171

AMENDATORY SECTION (Amending WSR 86-03-064, filed 1/17/86)

WAC 296-56-60139 Hoistway enclosures and landings. You must fully enclose hoistways ((~~shall be fully enclosed,~~)) or make sure they are enclosed on all landings to a height of six feet above the landing floor or six feet above highest working level or stair level adjacent to the hoistway. Perforated hoistway enclosures can be used where fire resistance is not required, provided:

(1) Steel wire grill or expanded metal grill ((~~shall~~)) must be at least thirteen U.S. gauge steel wire.

(2) Openings in the enclosure ((~~shall~~)) must reject a one inch steel ball.

(3) All hoistway landings ((~~shall~~)) must be properly and adequately lighted.

AMENDATORY SECTION (Amending WSR 86-03-064, filed 1/17/86)

WAC 296-56-60143 Hoistway gates. (1) You may construct hoistway gates ((~~may be constructed~~)) of wood slat, steel wire grill, expanded metal or solid material, providing all openings reject a two inch ball and resist a two hundred fifty pound horizontal thrust.

(a) Steel wire and expanded metal gates ((~~shall~~)) must be of at least thirteen gauge steel.

(b) Wood slats must be not less than two inches wide and one-half inch thick, nominal size.

(c) Solid material ((~~shall~~)) must be not less than one-eighth inch reinforced sheet steel or one-half inch plywood.

(2) You may have hoistway gates ((~~may~~)) be horizontal swinging, vertical or horizontal sliding or biparting gates.

(a) Hoistway gates ((~~shall~~)) must extend the full width of the elevator car and from one inch above the landing floor to six feet or more above the floor.

(b) Horizontal swinging gates ((~~shall~~)) must be prevented from swinging into hoistway.

(3) You must equip gates ((~~shall be equipped~~)) with interlocks or mechanical locks and electric contacts designed so that hoistway gates cannot be opened when the car is away from the landing.

AMENDATORY SECTION (Amending WSR 86-03-064, filed 1/17/86)

WAC 296-56-60145 Elevator car. (1) You must fully enclose elevator cars ((~~shall be fully enclosed~~)) to car height or to a height of not less than six feet six inches whichever is greater. Elevator cars may be of perforated or solid material provided the material will withstand a horizontal thrust of seventy-five pounds without deflecting one-quarter inch and all openings will reject a one inch ball.

(a) Car frames ((~~shall~~)) must be of substantial metal or wood construction with a safety factor of four for metal frames and six for wood frames.

(b) Wood frames ((~~shall~~)) must be gusseted and bolted or otherwise secured with large washers and lock washers.

(c) The car platform ((~~shall~~)) must not exceed thirty inches inside dimension on each side (6.25 square foot area).

(2) Every car ((~~shall~~)) must have a substantial protective top. The front half may be hinged. The protective top may be made from number nine U.S. wire gauge screen, eleven gauge expanded metal, fourteen gauge sheet steel, or three-quarter inch or heavier plywood. If made of wire screen or metal, the openings shall reject a one-half inch diameter ball.

AMENDATORY SECTION (Amending WSR 86-03-064, filed 1/17/86)

WAC 296-56-60147 Elevator doors. You must provide elevator car doors ((~~shall be provided~~)) on all elevators, except on fully enclosed hoistways equipped with hoistway gates and enclosed from the top of the hoistway opening to the ceiling on the landing side.

(1) Car doors may be of solid or perforated construction and ((~~shall~~)) must be capable of resisting a seventy-five pound thrust without deflecting one-quarter inch.

(2) Car doors may be biparting or otherwise horizontally swung provided the door swings within the elevator car.

(3) A positive locking latch device which resists a two hundred fifty pound thrust ((~~shall~~)) must be provided.

(4) Interlocks or mechanical locks and electric contacts must be provided on cars operating in open hoistways.

AMENDATORY SECTION (Amending WSR 85-01-022, filed 12/11/84)

WAC 296-56-60149 Counterweight, enclosures, and fastenings. You must fully enclose all counterweights ((~~shall be fully enclosed~~)) for their full length of travel except in closed hoistways where counterweight guide rails have been provided.

(1) Counterweight enclosures ((~~shall~~)) must provide an inspection opening in the bottom of the enclosure large enough to provide for the inspection of cable fastenings, counterweight and buffer. Counterweights of rectangular shape ((~~shall~~)) must be secured by not less than two one-half inch mild steel bolts with locknuts. Round counter-

weights ((~~shall~~)) must be fastened with a center bolt not less than three-quarter inch diameter and secured with a locknut.

(2) Bolt eyes ((~~shall~~)) must be welded closed.

(3) Cable fastenings ((~~shall~~)) must be not less than three U-shaped clamps with U's on the dead side of the rope or babbitted tapered elevator sockets.

AMENDATORY SECTION (Amending WSR 86-03-064, filed 1/17/86)

WAC 296-56-60151 Guide rails. You must provide a minimum of two car guide rails ((~~shall be provided~~)). They ((~~shall~~)) must:

(1) Extend at least six inches beyond the maximum travel of the car with buffers compressed.

(2) Be securely fastened to a vertical supporting member for the full length of elevator travel.

(3) Be not less than one and one-half inch by one and one-half inch vertical grain fir or equivalent, one-quarter inch by two inch by two inch angle iron or equivalent.

(4) Not vary more than three-sixteenths inch thickness on brake surfaces for wood guide rails.

(5) Be secured to resist more than one-half inch total deflection on car safety application and resist a two hundred fifty pound horizontal thrust.

AMENDATORY SECTION (Amending WSR 86-03-064, filed 1/17/86)

WAC 296-56-60153 Hoisting ropes. You must make sure hoisting ropes ((~~shall be~~)) are of good grade elevator traction wire rope and ((~~shall~~)) must:

(1) Be at least two ropes of not less than three-eighths inch diameter providing a safety factor of five.

(2) Be fastened by at least three U-type cable clamps with the U on the dead return end of the rope or by approved elevator sockets of the babbitted type.

(3) Be of such length that the car platform will not be more than six inches above the top landing when the counterweight buffer is fully compressed. The counterweight ((~~shall~~)) must be six inches or more away from the counterbalance sheave when the car buffer is fully compressed.

AMENDATORY SECTION (Amending WSR 86-03-064, filed 1/17/86)

WAC 296-56-60155 Space under hoistway. You must make sure there ((~~shall be~~)) is no habitable space below the elevator hoistway and counterweight shaft unless the floor is designed to withstand an impact one hundred twenty-five percent greater than the impact generated by a free fall of either the car or counterweight from the full height of the hoistway.

AMENDATORY SECTION (Amending WSR 86-03-064, filed 1/17/86)

WAC 296-56-60157 Car safeties. You must equip all cars suspended or operated from overhead machinery ((~~shall be equipped~~)) with an approved car safety capable of stopping and holding the car with rated load.

(1) Car safeties ((~~shall~~)) must operate mechanically and be independent of interruption of any electrical circuit.

(2) Car safeties and governor controlled safeties ((~~shall~~)) must automatically operate and the control circuit ((~~shall~~)) must be broken in the event of cable breakage.

AMENDATORY SECTION (Amending WSR 86-03-064, filed 1/17/86)

WAC 296-56-60159 Brakes. You must equip all elevators ((~~shall be equipped~~)) with brakes designed to engage mechanically and release electrically.

(1) Brakes ((~~shall~~)) must be located on the final drive of all elevator machines.

(2) The brake actuating circuit ((~~shall~~)) must be so designed that interruption of power by slack cable switch, control switch, and limit switches actuate the brake.

(3) The brakes ((~~shall~~)) must actuate under short circuit, phase failure, or reverse phase conditions.

AMENDATORY SECTION (Amending WSR 86-03-064, filed 1/17/86)

WAC 296-56-60161 Car controls and safety devices. (1) You must make sure car controls ((~~may be~~)) are of automatic pushbutton, constant pressure pushbutton or momentary pushbutton types. Hand rope and car switch controls ((~~shall~~)) must not be used.

(2) You must install manually operated emergency stop switches ((~~shall be installed~~)) in all cars not equipped with constant pressure pushbutton controls. The switch ((~~shall~~)) must be clearly marked "emergency stop."

(3) You must make sure terminal limiting devices ((~~shall~~)) operate independently of the car controls and automatically stop the car at the top and bottom terminal landings.

(4) You must equip all winding drum machine type elevators ((~~shall be equipped~~)) with top and bottom final limit switches.

(5) You must require a slack rope device of manual reset design ((~~shall be required~~)) on all winding drum type machines. The device ((~~shall~~)) must be designed to deenergize the circuit to the drive motor and brake.

(6) You must equip all installations ((~~shall be equipped~~)) with an overspeed governor. This governor ((~~shall~~)) must be set not to exceed one hundred seventy-five feet per minute and ((~~shall~~)) must be designed to ((~~de-energize~~)) deenergize the brake control and motor drive circuits simultaneously with the activation of the car safety

mechanism. Car speeds for these types of installations ((~~shall~~)) must not exceed a speed of one hundred twenty-five feet per minute.

AMENDATORY SECTION (Amending WSR 86-03-064, filed 1/17/86)

WAC 296-56-60167 Hoisting machine mechanisms. (1) You must make sure elevator machines ((~~shall be~~)) are driven by approved type units.

(a) On direct drive or approved worm gear driven type, a mechanically actuated, electrically released brake ((~~shall~~)) must be installed on the driving unit.

(b) On V belt driven types, a minimum of four belts, one-half inch minimum size, ((~~shall~~)) must be used to transmit power from the motor to the drive shaft and a mechanically actuated, electrically released brake ((~~shall~~)) must be installed on the final drive shaft.

(2) You must install elevator machines on the top side of their supporting structure, wherever practical((~~, elevator machines shall be installed on the top side of their supporting structure~~)).

(3) You must make sure all components of the driving mechanism and parts subject to stress involved in suspending the load or related equipment ((~~shall be~~)) are designed to withstand eight times the total weight to be suspended, including load, counterweight, car and cables.

(4) You must make sure gears ((~~shall be~~)) are made of steel or equivalent material. Cast iron gears are prohibited.

AMENDATORY SECTION (Amending WSR 86-03-064, filed 1/17/86)

WAC 296-56-60169 Elevator car and counterweight buffers. (1) You must provide elevator cars ((~~shall be provided~~)) with adequate car buffers.

(2) You must provide all elevators using a counterweight ((~~shall be provided~~)) with adequate counterweight buffers.

AMENDATORY SECTION (Amending WSR 01-17-033, filed 8/8/01, effective 9/1/01)

WAC 296-56-60171 General requirements. (1) You must provide adequate lighting ((~~shall be provided~~)) at each landing and in the shaftway.

(2) You must conspicuously post a sign within the car bearing the following information ((~~shall be conspicuously posted within the car~~)):

(a) Maximum capacity one person;

(b) Total load limit in pounds;

(c) For authorized personnel use only.

(3) You must make a fire extinguisher in proper working condition ((~~shall be~~)) available in the car.

Note: For additional requirements relating to portable fire extinguishers see WAC 296-800-300.

((~~PART I—MANLIFTS—HAND POWER~~))

NEW SECTION

WAC 296-56-60179 Manlifts—Hand power.

Summary

This section applies to the installation, design, and use of all one-man capacity, hand power counterweighted elevators subject to inspection under RCW 49.17.120.

Your responsibility: To protect workers from hazards associated with hand power manlifts in your workplace.

You must meet the requirements…	**in this section:**
Scope and application	WAC 296-56-60180
Hoistway landings	WAC 296-56-60183
Hoistway clearances	WAC 296-56-60185
Habitable space under hoistways	WAC 296-56-60187
Hoistway guide rails	WAC 296-56-60189
Buffer springs and overtravel of car	WAC 296-56-60191
Car specifications	WAC 296-56-60193
Counterweights	WAC 296-56-60195
Sheaves	WAC 296-56-60197
Hoisting ropes	WAC 296-56-60199
Operating rope	WAC 296-56-60201
Lighting	WAC 296-56-60203
Overhead supports	WAC 296-56-60205
General requirements	WAC 296-56-60207

AMENDATORY SECTION (Amending WSR 86-03-064, filed 1/17/86)

WAC 296-56-60183 Hoistway landings. (1) You must protect every hoistway landing ((~~shall be protected~~)) on all sides other than the landing opening side with a standard guard rail and intermediate guard rail. All landings except the bottom landing ((~~shall~~)) must have a toe board installed on all sides except the landing opening side.

(2) You must make sure all hoistway entrances ((~~shall be~~)) are not less than six feet six inches in height and in no case shall the width exceed the corresponding car dimensions.

(3) You must provide all hoistway entrances ((~~must be provided~~)) with an approved maze or with a hoistway gate which ((~~shall~~)) must:

(a) Be at least thirty-six inches in height.

(b) Extend downward to within one inch of the landing sill.

(c) Be of the self-closing type, designed to swing horizontally out from the hoistway and closing against a full jam stop.

(d) Be located within four inches of the hoistway edge of the landing sill.

(e) Have a "DANGER" sign conspicuously posted on the landing side of the hoistway gate.

(f) Withstand a two hundred fifty pound horizontal thrust.

(4) You must make sure all projections extending inwardly from the hoistway enclosure at the entrance side of the car platform ((~~shall be~~)) are bevelled and substantially guarded on the underside by smooth solid material set at an angle of not less than sixty degrees, nor more than seventy-five degrees from the horizontal when cars are not equipped with gates.

AMENDATORY SECTION (Amending WSR 85-01-022, filed 12/11/84)

WAC 296-56-60185 Hoistway clearances. (1) You must make sure the minimum clearance between the side of the car and a hoistway enclosure ((~~shall be~~)) is one inch.

(2) You must make sure the clearance between the car platform and the landing sill ((~~shall~~)) is not ((~~be~~)) less than one-half inch and not more than one and one-half inches.

AMENDATORY SECTION (Amending WSR 85-01-022, filed 12/11/84)

WAC 296-56-60187 Habitable space under hoistways. You must make sure there ((~~shall be~~)) is no habitable space below the elevator hoistway or counterweight shaft unless the floor is supported to withstand any impact caused by the car or counterweight dropping freely onto the floor.

AMENDATORY SECTION (Amending WSR 86-03-064, filed 1/17/86)

WAC 296-56-60189 Hoistway guide rails. (1) You must make sure there ((~~shall be~~)) are a minimum of two opposing guide rails extending to a point six inches beyond the full height of travel of the car when the counterweight buffer is fully compressed.

(2) You must make sure all rails ((~~shall be~~)) are attached by bolts, lag screws or other approved methods to a vertical supporting member which ((~~shall~~)) does not exceed one-half inch deflection with the application of a two hundred fifty pound horizontal thrust at any point.

(3) You must make sure wood guide rails ((~~shall be~~)) are at least one and one-half inch by one and one-half inch vertical grain fir or equivalent and ((~~shall~~)) must not vary more than three-sixteenth inch in thickness on the sides which the brakes contact. All joints ((~~shall~~)) must be kept smooth and even.

AMENDATORY SECTION (Amending WSR 86-03-064, filed 1/17/86)

WAC 296-56-60191 Buffer springs and overtravel of car. You must install substantial spring buffers ((~~shall be installed~~)) below the car and also below the counterweight. The hoisting rope ((~~shall~~)) must be of such length that the car platform will not be more than eight inches above the top landing when the counterweight buffer spring is fully compressed.

AMENDATORY SECTION (Amending WSR 86-03-064, filed 1/17/86)

WAC 296-56-60193 Car specifications. (1) You must make sure the car shall be built to the following specifications:

(a) The car platform ((~~shall be~~)) is not greater than thirty inches on either side (6.25 square feet area).

(b) The car frame and platform ((~~shall~~)) must be of steel or sound seasoned wood construction and be designed with a safety factor of not less than four for metal and six for wood, based on a maximum capacity of two hundred fifty pounds.

(c) All frame members ((~~shall~~)) must be securely bolted, riveted or welded and braced. If bolted, lock washers or lock nuts ((~~shall~~)) must be used.

(d) Where wooden frame members are bolted, large washers or metal plates ((~~shall~~)) must be used to minimize the possibility of splitting or cracking the wood.

(2) You must enclose the sides of the car ((~~shall be enclosed~~)) by a minimum of two safety guard rails with the top rail not less than thirty-six inches nor more than forty-two inches from the car floor. Rails ((~~shall~~)) must sustain a horizontal thrust of two hundred fifty pounds. If solid material is used it ((~~shall~~)) must be smooth surfaced and not less than one-half inch thickness, if wood; not less than sixteen gauge thickness, if steel; and ((~~shall~~)) must be constructed from the car floor to a height of not less than three feet.

(a) Where the hoistway is not enclosed on the entrance side of the car, a self-locking or drop bar gate must be provided. The car gate may be of the folding type, horizontally swung, provided it swings into the car enclosure. Drop bar gates must be of two bar construction, parallelogram type, and conform to requirements specified for car guard rails.

(b) The car gate ((~~shall~~)) must drop into locking slots or be provided with a positive locking type latch capable of withstanding two hundred fifty pounds horizontal thrust.

(3) You must make sure every car ((~~shall have~~)) has a substantial protective top. The front half may be hinged. The protective top may be made from number nine U.S. wire gauge screen, eleven gauge expanded metal, fourteen gauge sheet steel, three-quarter inch or heavier plywood. If made of wire screen or metal, the openings ((~~shall~~)) must reject a one-half inch diameter ball.

(4) You must make sure every car ((~~shall have~~)) has a proper rack to hold the balance weights.

(5) You must conspicuously post a sign within the car bearing the following information ((~~shall be conspicuously posted within the car~~)):

(a) Maximum capacity one person;
(b) Total load limit in pounds;
(c) For authorized personnel use only.
(6) You must equip every car ((~~shall be equipped~~)) with a spring loaded foot brake which:
(a) Operates independently of the car safeties;
(b) Operates in both directions and will stop and hold the car and its load;
(c) Locks the car in its position automatically whenever the operator releases the pressure on the foot pedal.
(7) You must equip every car ((~~shall be equipped~~)) with a car safety device which:
(a) Applies to the sides of the main guide rails;
(b) Stops and holds the car and its load immediately when the hoisting rope breaks.
(8) You must make sure every car ((~~shall have~~)) has a minimum clearance of six feet six inches from the top of the car platform to the bottom edge of the crosshead or any other obstruction.
(9) You must provide and firmly attach a tool box with minimum dimensions of four inches wide by sixteen inches long by three inches in depth ((~~shall be provided and firmly attached~~)) to the car structure.

AMENDATORY SECTION (Amending WSR 86-03-064, filed 1/17/86)

WAC 296-56-60195 Counterweights. (1) You must make sure the assembly of sectional counterweights ((~~shall~~)) conforms to the following requirements:
(a) Rectangular counterweights ((~~shall~~)) must be held together by at least two tie rods one-half inch in diameter fastened with lock washers and double nuts or other approved means.
(b) One three-quarter inch rod may be used to hold the sections of a round counterweight together. Any additional sections or weights ((~~shall~~)) must be secured by an approved means.
(2) You must make sure the eye bolt for the rope hitch ((~~shall be~~)) is attached to the counterweight in a manner that will prevent the eye bolt from coming loose. The eye of eye bolts ((~~shall~~)) must be welded to prevent it from opening.
(3) You must enclose every counterweight runway ((~~shall be enclosed~~)) with substantial unperforated material for its full distance of travel. Inspection openings ((~~shall~~)) must be provided at either the top or bottom of the counterweight runway. These openings ((~~shall~~)) must be substantially covered at all times except when actually being used for inspection of counterweight fastenings.
(4) You must make sure workmen ((~~shall~~)) load the counterweight for the proper balance of the heaviest person using the elevator and others ((~~shall~~)) must use compensating weights, which ((~~shall~~)) must be available, to maintain a balance.
(5) You must install a compensating chain or cable on elevators with travel of seventy-five feet or more((~~, a compensating chain or cable shall be installed~~)) to maintain the proper balance of the counterweight to the car and load in all positions.

AMENDATORY SECTION (Amending WSR 85-01-022, filed 12/11/84)

WAC 296-56-60197 Sheaves. You must make sure the minimum sheave diameter ((~~shall be~~)) is forty times the diameter of the ropes used, i.e., fifteen inch for three-eighths inch rope.

AMENDATORY SECTION (Amending WSR 86-03-064, filed 1/17/86)

WAC 296-56-60199 Hoisting ropes. (1) You must make sure hoisting rope ((~~shall be~~)) is of good grade traction elevator wire rope, and ((~~shall~~)) must:

(a) Be not less than three-eighths inches in diameter.

(b) Provide a safety factor of five based on the maximum weight supported.

(c) Be of sufficient length to prevent the counterweight from striking the overhead structure when car is at bottom, and prevent the car from striking the overhead before the counterweight is at its lower limit of travel.

(d) Be fastened at each end by at least three or more clamps, with the "U" of the clamp bearing on the dead end of the rope.

(e) Where passed around a metal or other object less than three times the diameter of the cable, have a thimble of the correct size inserted in the eye.

(2) You may use approved sockets or fittings with the wire properly turned back and babbitted ((~~may be used~~)) in place of clamps noted in subsection (1)(d) of this section.

AMENDATORY SECTION (Amending WSR 86-03-064, filed 1/17/86)

WAC 296-56-60201 Operating rope. You must make sure the operating rope ((~~shall be~~)) is of soft hemp or cotton at least three-quarter inch in diameter. It ((~~shall~~)) must be securely fastened at each end and ((~~shall~~)) must be in proper vertical alignment to prevent bending or cutting where it passes through the openings in the platform or the protective top of the car.

AMENDATORY SECTION (Amending WSR 85-01-022, filed 12/11/84)

WAC 296-56-60203 Lighting. You must provide adequate lighting ((~~shall be provided~~)) at each landing and in the shaftway.

AMENDATORY SECTION (Amending WSR 86-03-064, filed 1/17/86)

WAC 296-56-60205 Overhead supports. You must make sure the overhead supporting members ((~~shall be~~)) are designed, based upon impact loads, with a safety factor of:

(1) Nine if wood;

(2) Five if steel.

AMENDATORY SECTION (Amending WSR 01-17-033, filed 8/8/01, effective 9/1/01)

WAC 296-56-60207 General requirements. (1) ((~~No person~~)) You must prohibit any person other than an employee or duly authorized person ((~~shall ride or be permitted to ride~~)) from riding in the car.

(2) You must install escape ladders ((~~shall be installed~~)) extending the full length of the hoistway and ((~~shall~~)) must be located in a position so that, in an emergency, a person can safely transfer from the car platform to the ladder. An "IMPAIRED CLEARANCE" sign ((~~shall~~)) must be posted at the bottom of a ladder when the face of the ladder is less than thirty inches from any structure.

(3) You must install an automatic safety dog or device which will prevent the car from leaving the landing until manually released by the operator ((~~shall be installed at the bottom landing~~)).

(4) You must make available a fire extinguisher in proper working condition ((~~shall be available~~)) in the car.

Note: For additional requirements relating to portable fire extinguishers see WAC 296-800-300.

((~~PART J—LADDERS, STAIRWAYS OPENINGS, SANITATION, SIGNS, ETC.~~))

NEW SECTION

WAC 296-56-60208 Ladders, stairway openings, sanitation, signs, etc.

Summary

This section applies to all ladders, stairway openings, sanitation, and signs in your workplace.

Your responsibility: To protect employees from hazards in your workplace.

You must meet the requirements…	**in this section:**
Fixed ladders	WAC 296-56-60209
Portable ladders	WAC 296-56-60211

You must meet the requirements…	in this section:
Jacob's ladders	WAC 296-56-60213
Fixed stairways	WAC 296-56-60215
Spiral stairways	WAC 296-56-60217
Employee exits	WAC 296-56-60219
Illumination	WAC 296-56-60221
Passage between levels and across openings	WAC 296-56-60223
Guarding temporary hazards	WAC 296-56-60225
River banks	WAC 296-56-60227
Sanitation	WAC 296-56-60229
Signs and marking	WAC 296-56-60231

AMENDATORY SECTION (Amending WSR 00-21-103, filed 10/18/00, effective 2/1/01)

WAC 296-56-60209 Fixed ladders. (1) ((~~Scope.~~)) This section applies to all fixed ladders except:

(a) Ladders forming an integral part of railway cars, highway carriers, cargo containers, or other transportation carrier equipment;

(b) Climbing devices such as step bolts or structural members of tanks and towers;

(c) Ladders built into or vertically attached to tubular scaffold framing; and

(d) Ladders used only for firefighting or emergency purposes are exempt from the provisions of subsection (5) of this section. All other requirements of this section apply.

(2) ((~~Definitions.~~

~~(a) "Cage" (basket guard) means a barrier enclosing or nearly enclosing a ladder's climbing space and fastened to one or both of the ladder's side rails or to another structure.~~

~~(b) "Fixed ladder" means a ladder, including individual rung ladders, permanently attached to a structure, building, or piece of equipment.~~

~~(c) "Ladder safety device" means a support system limiting an employee's drop or fall from the ladder, and which may incorporate friction brakes, lifelines and lanyards, or sliding attachments.~~

~~(d) "Well" means a permanent complete enclosure around a fixed ladder, which is attached to the walls of the well.~~

~~(3)~~)) You must meet the following requirements for ladders with defects.

(a) Ladders with broken, split, or missing rungs, steps or rails, broken welds or connections, corrosion or wastage, or other defect which may affect safe use ((~~shall~~)) must be removed from service.

(b) Ladder repairs ((~~shall~~)) must provide strength at least equivalent to that of the original ladder.

((~~(4)~~)) (3) You must meet the following requirements for ladder specifications((~~.~~)):

(a)((~~(i)~~)) Ladders installed before October 3, 1983, ((~~shall~~)) must be capable of withstanding without damage a minimum concentrated

load, applied uniformly over a three and one-half inch (8.9 cm) width at the rung center, of two hundred pounds (890 N).

((~~(ii)~~)) (b) Ladders installed after October 3, 1983, ((~~shall~~)) must be capable of withstanding two hundred fifty pounds (1112 N) applied as described in (a)((~~(i)~~)) of this subsection. If used by more than one employee simultaneously, the ladder as a unit ((~~shall~~)) must be capable of simultaneous additional loading in two hundred fifty pound (1112 N) increments for each additional employee, applied to a corresponding number of rungs. The unit ((~~shall~~)) must have a safety factor of four based on ultimate strength, in the designed service.

((~~(b)(i)~~)) (c) Ladders installed before October 3, 1983, ((~~shall~~)) must have rungs evenly spaced from nine to sixteen and one-half inches (22.9 to 41.9 cm) apart, center to center.

((~~(ii)~~)) (d) Ladders installed after October 3, 1983, ((~~shall~~)) must have rungs evenly spaced twelve inches apart, plus or minus two inches (30.5 cm, plus or minus 5.08 cm), center to center.

((~~(c)(i)~~)) (e) Ladders installed before October 3, 1983, ((~~shall~~)) must have a width between side rails of at least ten inches (25.4 cm).

((~~(ii)~~)) (f) Ladders installed after October 3, 1983, ((~~shall~~)) must have a width between side rails of at least twelve inches (30.48 cm).

((~~(d)~~)) (g) The minimum distance between the rung center line and the nearest permanent object behind the rung ((~~shall~~)) must be four inches (10.16 cm), except that in ladders installed after October 3, 1983, the minimum distance ((~~shall~~)) must be seven inches (17.78 cm) unless physical limitations make a lesser distance, not less than four and one-half inches (11.43 cm), necessary.

((~~(e)~~)) (h) When a ladder passes through an opening or past overhead obstructions, a minimum twenty-four inch (.61 m) clearance ((~~shall~~)) must exist between the climbing side and any obstruction. Where this distance is less than thirty inches (0.76 m), a deflection device ((~~shall~~)) must be installed for guidance through the opening.

((~~(f)~~)) (i) The side rails of ladders ((~~shall~~)) must extend at least thirty-six inches (0.91 m) above the top landing surface, unless grab bars or equivalent holds are provided.

((~~(g)~~)) (j) Ladders whose pitch exceeds ninety degrees to the horizontal (slanting backward on the climbing side) ((~~shall~~)) must not be used.

((~~(5) Protection~~)) (4) You must meet the following requirements to protect against falls((~~.~~)):

(a) Fixed ladders more than twenty feet (6.1 m) in height ((~~shall~~)) must be provided with a cage, well, or ladder safety device.

(b) When a well or cage is used, ladders with length of climb exceeding thirty feet (9.14 m) ((~~shall~~)) must comply with the following provisions:

(i) The ladder ((~~shall~~)) must consist of multiple sections not exceeding thirty feet (9.14 m) each;

(ii) Each section ((~~shall~~)) must be horizontally offset from adjacent sections, except as specified in (b)(iv) of this subsection; ((~~and~~))

(iii) A landing platform capable of supporting a load of one hundred pounds per square foot (4.79 kPa) and fitted with guardrails complying with WAC 296-56-60123(3) ((~~shall~~)) must be provided at least every thirty feet (9.14 m), except as specified in (b)(iv) of this subsection; and

(iv) For ladders installed after October 3, 1983, offset sections and landing platforms are not required if hinged platforms capable of supporting one hundred pounds per square foot (4.79 kPa), and which are kept closed except when opened for passage, are within the cage or well at intervals not exceeding thirty feet (9.14 m).

(c) Ladders equipped with ladder safety devices ((~~shall~~)) must have rest platforms:

(i) Capable of supporting a load of one hundred pounds per square foot (4.79 kPa);

(ii) Located at intervals of one hundred fifty feet (45.7 m) or less; and

(iii) Protected by guardrails complying with WAC 296-56-60123(3) on three sides.

(d) Where used, ladder safety devices ((~~shall~~)) must:

(i) Be installed and maintained in accordance with the manufacturer's instructions, which ((~~shall~~)) must be available for inspection upon request;

(ii) Be repaired only with replacement parts having performance capability at least equal to that of the original parts;

(iii) Have a connection length between carrier centerlines and safety belts of 10 ± 2 inches (25.4 ± 5.08 cm); and

(iv) Be installed in a manner that does not reduce the ladder's structural capacity.

(e) Ladder cages or wells ((~~shall~~)) must:

(i) Be of rigid construction that allows unobstructed use but prevents an employee from falling through or dislodging the cage or well by falling against it;

(ii) Have smooth inner surfaces;

(iii) Extend at least thirty-six inches (0.91 m) above landings; and

(iv) Extend to within eight feet (2.44 m) above the ground or base, except that a maximum of twenty feet (6.1 m) is permitted where the cage or well would extend into traffic lanes.

(f) Ladders installed after January 1, 1985, on radio, microwave communications, electrical power and similar towers, poles and structures, including stacks and chimneys, ((~~shall~~)) must meet the requirements of this subsection.

((~~(6) Individual rung ladders.~~)) (5) You must make sure ladders consisting of individual rungs that are attached to walls, conical manhole sections or river cells ((~~shall~~)) are:

(a) ((~~Be~~)) Capable of supporting a load of three hundred fifty pounds (1557 N) without deformation;

(b) Form a continuous ladder, uniformly spaced vertically from twelve inches to sixteen inches (30.5 to 40.6 cm) apart, with a minimum width of ten inches (25.4 cm), and projecting at least four and one-half inches (11.43 cm) from the wall;

(c) ((~~Be so~~)) Constructed that an employee's foot cannot slide off the ends; and

(d) Be firmly attached and without sharp edges.

AMENDATORY SECTION (Amending WSR 00-21-103, filed 10/18/00, effective 2/1/01)

WAC 296-56-60211 Portable ladders. (1) ((~~Scope and applicability.~~)) You must meet the requirements of this section as it applies to all portable ladders, including job-made ladders for temporary use, unless otherwise specified.

(2) You must meet the standards for existing manufactured portable ladders((~~.~~)) as follows:

(a) Rungs of manufactured portable ladders obtained before October 3, 1983, ((~~shall~~)) must be capable of supporting a two hundred pound (890 N) load without deformation.

(b) Rungs ((~~shall~~)) must be evenly spaced from nine to sixteen and one-half inches (22.9 to 41.9 cm), center to center.

(c) Rungs ((~~shall~~)) must be continuous members between rails. Each rung of a double-rung ladder (two side rails and a center rail) ((~~shall~~)) must extend the full width of the ladder.

(d) Width between side rails at the base of the ladder ((~~shall~~)) must be at least twelve inches (30.48 cm) for ladders ten feet (3.05 m) or less in overall length, and ((~~shall~~)) must increase at least one-fourth inch (0.64 cm) for each additional two feet (0.61 m) of ladder length.

(3) ((~~Standards for manufactured portable ladders.~~)) You must make sure manufactured portable ladders obtained after October 3, 1983, ((~~shall~~)) bear identification indicating that they meet the appropriate ladder construction requirements of the following standards:

(a) ANSI A14.1-1990 Safety Requirements for Portable Wood Ladders

(b) ANSI A14.2-1990 Safety Requirements for Portable Metal Ladders

(c) ANSI A14.5-1992 Safety Requirements for Portable Reinforced Plastic Ladders

(4) ((~~Standards for job-made portable ladders.~~)) You must meet these standards for job-made portable ladders ((~~shall~~)):

(a) Have a minimum and uniform distance between rungs of twelve inches (30.48 cm), center to center;

(b) Be capable of supporting a two hundred fifty pound (1112 N) load without deformation; and

(c) Have a minimum width between side rails of twelve inches (30.48 cm) for ladders ten feet (3.05 m) in height. Width between rails ((~~shall~~)) must increase at least one-fourth inch (0.64 cm) for each additional two feet (0.61 m) of ladder length.

(5) You must meet the following requirements for maintenance and inspection((~~.~~)):

(a) ((~~The employer shall~~)) You must maintain portable ladders in safe condition. Ladders with the following defects ((~~shall~~)) must not be used and either ((~~shall~~)) must be tagged as unusable if kept on the premises or ((~~shall~~)) must be removed from the worksite:

(i) Broken, split or missing rungs, cleats, or steps;

(ii) Broken or split side rails;

(iii) Missing or loose bolts, rivets, or fastenings;

(iv) Defective ropes; or

(v) Any other structural defect.

(b) Ladders ((~~shall~~)) must be inspected for defects prior to each day's use, and after any occurrence, such as a fall, which could damage the ladder.

(6) You must meet the following requirements for ladder usage((~~.~~)):

(a) Ladders made by fastening rungs or devices across a single rail are prohibited.

(b) Ladders ((~~shall~~)) must not be used:

(i) As guys, braces, or skids; or

(ii) As platforms, runways, or scaffolds.

(c) Metal and wire-reinforced ladders with wooden side rails ((~~shall~~)) must not be used when employees on the ladder might come into contact with energized electrical conductors.

(d) Individual sections from different multisectional ladders or two or more single straight ladders ((~~shall~~)) must not be tied or fastened together to achieve additional length.

(e) Except for combination ladders, self-supporting ladders ((~~shall~~)) must not be used as single straight ladders.

(f) Unless intended for cantilever operation, nonself-supporting ladders ((~~shall~~)) must not be used to climb above the top support point.

(g) Ladders ((~~shall~~)) must extend at least thirty-six inches (0.91 m) above the upper support level if employees are to leave or mount the ladder at that level, except that where such extension is impractical other equivalent means such as grab bars may be used to provide a hand grip.

(h) Ladders ((~~shall~~)) must be securely positioned on a level and firm base.

(i) Ladders ((~~shall~~)) must be fitted with slip-resistant bases and secured at top or bottom to prevent the ladder from slipping.

(j) Ladders ((~~shall~~)) must be placed so that employees climbing are not exposed to injury from projecting objects or doors that open toward the ladder.

AMENDATORY SECTION (Amending WSR 85-01-022, filed 12/11/84)

WAC 296-56-60213 Jacob's ladders. (1) You must make sure Jacob's ladders ((~~shall be~~)) are of the double rung or flat tread type. They ((~~shall~~)) must be well maintained and properly secured to the dock.

(2) You must either hang a Jacob's ladder ((~~shall either hang~~)) without slack from its lashings or be pulled up entirely.

AMENDATORY SECTION (Amending WSR 00-21-103, filed 10/18/00, effective 2/1/01)

WAC 296-56-60215 Fixed stairways. ((~~(1) Definition. "Fixed stairway" means interior or exterior stairs serving machinery, tanks, or equipment, and stairs to or from floors, platforms, or pits. The term does not apply to stairs intended only for fire exit purposes, to articulated stairs (the angle of which changes with the rise and fall of the base support) or to stairs forming an integral part of machinery.~~

~~(2)~~)) You must meet these requirements for new installations((~~.~~)):

((~~(a)~~)) (1) Fixed stairs installed after October 3, 1983, ((~~shall~~)) must be positioned within the range of thirty degrees to fifty degrees to the horizontal with uniform riser height and tread width throughout each run and be capable of a minimum loading of one hundred pounds per square foot (445 N) and a minimum concentrated load of three hundred pounds (1334 N) at the center of any treadspan. Riser height ((~~shall~~)) must be from six to seven and one-half inches (15.24 to 19.05 cm), stair width a minimum of twenty-two inches (55.88 cm) between vertical barriers, and tread depth a minimum of 12 ± 2 inches (30.48 ± 5.08 cm), and tread nosing ((~~shall~~)) be straight leading edges.

((~~(b)~~)) (2) Stair landings ((~~shall~~)) must be at least twenty inches (50.8 cm) in depth. Where doors or gates open on a stairway, a landing platform ((~~shall~~)) must be provided. Door swing ((~~shall~~)) must not reduce the effective standing area on the landing to less than eighteen inches (45.72 cm) in depth.

((~~(c)~~)) (3) Fixed stairs having four or more risers ((~~shall~~)) must have stair railings or handrails complying with WAC 296-56-60123(3).

((~~(d)~~)) (4) The railing height from tread surface at the riser face ((~~shall~~)) must be 33 plus or minus 3 inches (83.82 cm plus or minus 7.62 cm).

((~~(e)~~)) (5) For restricted areas((~~.~~)), when physical features require stairs steeper than those provided for by ((~~(a)~~)) (1) of this subsection, stairs at angles of fifty degrees to seventy-five degrees from the horizontal may be used if they:

((~~(i)~~)) (a) Are capable of supporting a single concentrated load of two hundred pounds (890 N) at the tread centers;

((~~(ii)~~)) (b) Have open treads at least four inches (10.16 cm) in depth and eighteen inches (45.72 cm) in width with a uniformly spaced vertical rise between treads of six to nine and one-half inches (15.24 to 24.13 cm); and

((~~(iii)~~)) (c) Have handrails that meet the requirements of WAC 296-56-60123(3) on both sides that are not less than thirty inches (76.2 cm) in height from the tread surface at the riser face.

((~~(f) Maintenance.~~)) (6) You must maintain fixed stairways ((~~shall be maintained~~)) in safe condition and ((~~shall~~)) must not be obstructed.

AMENDATORY SECTION (Amending WSR 00-21-103, filed 10/18/00, effective 2/1/01)

WAC 296-56-60217 Spiral stairways. (1) ((~~Definition. "Spiral stairway" means one with closed circular form, uniform sector-shaped treads and a supporting column.~~

~~(2) Requirements.~~)) You must meet the following requirements for spiral stairways ((~~shall meet the following requirements~~)):

(a) Stairways ((~~shall~~)) must conform to the minimum dimensions of Figure F-1;

Figure F-1

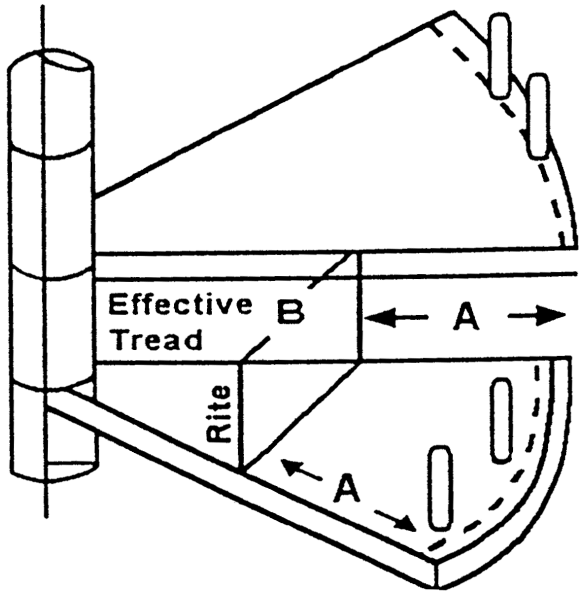

Spiral Stairway—Minimum Dimensions		
	A (Half-tread width)	B
Normal use by employees	11 inches (27.9 cm)	6 inches (15.2 cm)
Limited access . . .	9 inches (22.9 cm)	5 inches (12.7 cm)

(b) Stairway risers ((~~shall~~)) must be uniform and shall range from six and one-half to ten and one-half inches (16.5 to 26.67 cm) in height;

(c) Minimum loading capability ((~~shall~~)) be one hundred pounds per square foot (445 N), and minimum tread center concentrated loading shall be three hundred pounds (1334 N);

(d) Railing ((~~shall~~)) must conform to the requirements of WAC 296-56-60123(3). If balusters are used, there ((~~shall~~)) must be a minimum of one per tread. Handrails ((~~shall~~)) must be a minimum of one and one-fourth inches (3.18 cm) in outside diameter; and

(e) Vertical clearance ((~~shall~~)) must be at least six feet, six inches (1.98 m) above the top step.

((~~(3) Maintenance.~~)) (2) You must maintain spiral stairways ((~~shall be maintained~~)) in safe condition.

AMENDATORY SECTION (Amending WSR 00-21-103, filed 10/18/00, effective 2/1/01)

WAC 296-56-60219 Employee exits. (1) You must clearly mark employee exits ((~~shall be clearly marked~~)).

(2) You must post directional signs indicating routes to the exit if an employee exit is not visible from employees' work stations((~~, directional signs indicating routes to the exit shall be posted~~)).

(3) ((~~Exits shall be~~)) You must make sure exits are readily accessible and sufficient in number to provide employees with a convenient means of escape in emergencies. A clear passage to the exit shall be maintained.

(4) You must make sure the minimum width of any employee exit ((~~shall be~~)) is twenty-eight inches (71.12 cm).

(5) You must clearly mark and keep clear all fire exits and aisleways of all docks and warehouses ((~~shall be clearly marked and kept clear~~)). All main aisleways ((~~shall~~)) must be wide enough to permit passage of a fire truck.

(6) ((~~There shall be~~)) You must maintain a twenty-eight inch clearance ((~~maintained~~)) where employees use a passageway to an exit.

(7) You must provide every building, structure or crane, new or old, ((~~shall be provided~~)) with an emergency means of egress to permit the prompt escape of occupants in case of fire or other emergency, at all locations with a vertical height of thirty feet or more. Cranes, buildings, or structures erected prior to January 1, 1985, ((~~shall~~)) must comply with the provisions of this standard by July 1, 1986.

AMENDATORY SECTION (Amending WSR 09-15-144, filed 7/21/09, effective 9/1/09)

WAC 296-56-60221 Illumination. ((~~Lighting.~~)) You must light all areas ((~~shall be lighted~~)) to meet the requirements of this code.

(1) You must light active work areas ((~~shall be lighted~~)) in such a manner that the general area being worked will be illuminated at a minimum intensity of approximately five foot candles measured thirty inches above the dock floor. Supplemental lighting ((~~shall~~)) must be utilized where more than the minimum intensity is necessary for safe operation.

(a) The lighting intensity ((~~shall~~)) must be measured at the task/working surface in the plane in which the task/working surface is present.

(b) Lights ((~~shall~~)) must, so far as possible, be placed so that they will not shine in the eyes of employees.

(2) You must maintain a minimum of three foot candles illumination measured in the manner described above ((~~shall be maintained~~)) at all points along the bull rail.

(3) You must make sure the quality of light ((~~shall be~~)) is such that it is reasonably free from glare, and has correct direction, diffusion, and distribution.

(4) You must make sure that lighting shall not be obstructed by any placement of cargo, structures or other objects which might create a shadow in the work area. Portable lighting ((~~shall~~)) must be provided in those areas that do not meet the minimum requirements of this subsection.

(5) You must meet the following requirements for portable illumination((~~.~~)):

(a) All walking and working areas ((~~shall~~)) must be illuminated.

(b) Portable lights ((~~shall~~)) must meet the following requirements:

(i) Portable lights ((~~shall~~)) must be equipped with reflectors and guards to prevent flammable and other material from coming in con-

tact with the bulb, except that guards are not required where the construction of the reflector is such that the bulb is recessed.

(ii) Portable lights ((~~shall~~)) must be equipped with heavy duty electric cords. They may be suspended by such cords only when the means of attachment of the cord to the light is such as to prevent the light from being suspended by the electrical connections.

(iii) All connections and insulation ((~~shall~~)) must be maintained.

(iv) Lighting wires and fixtures for portable lights ((~~shall~~)) must be so arranged as to be free from contact with drafts, running gear, or other moving equipment.

AMENDATORY SECTION (Amending WSR 00-21-103, filed 10/18/00, effective 2/1/01)

WAC 296-56-60223 Passage between levels and across openings. (1) ((~~General. The employer shall~~)) You must provide safe means of passage between different surface levels and across openings.

(2) You must meet the following requirements for dockboards (car and bridge plates)((~~.~~)):

(a) Dockboards ((~~shall~~)) must be strong enough to support the loads imposed on them.

(b) Portable dockboards ((~~shall~~)) must be anchored in position or be equipped with devices to prevent their movement.

(c) Hand holds or other effective means ((~~shall~~)) must be provided on portable dockboards to permit safe handling.

(d) Positive means ((~~shall~~)) must be used to prevent railcars or highway vehicles from being moved while dockboards or bridge plates are in position.

(3) You must meet the following requirements for ramps((~~.~~)):

(a) Ramps ((~~shall~~)) must be strong enough to support the loads imposed on them, provided with sideboards, properly secured and well maintained.

(b) Ramps ((~~shall~~)) must be equipped with guardrails meeting the requirements of WAC 296-56-60123(3) if the slope is more than twenty degrees to the horizontal or if employees could fall more than four feet (1.22 m).

(c) Ramps ((~~shall~~)) must have slip-resistant surfaces.

(d) When necessary to prevent displacement by vehicle wheels, steel plates or similar devices, used to temporarily bridge or cover uneven surfaces or tracks, ((~~shall~~)) must be anchored.

AMENDATORY SECTION (Amending WSR 85-01-022, filed 12/11/84)

WAC 296-56-60225 Guarding temporary hazards. You must guard ditches, pits, excavations, and surfaces in poor repair ((~~shall be guarded~~)) by readily visible barricades, rails or other equally effective means.

AMENDATORY SECTION (Amending WSR 85-10-004, filed 4/19/85)

WAC 296-56-60227 River banks. (1) This section applies to temporary installations or temporary operations near a river bank.

(2) You must ensure that the outer perimeter of the working surface is protected by posting or other portable protection such as roping off, and that employees wear a personal flotation device meeting the requirements of WAC 296-56-60115(2), where working surfaces at river banks slope so steeply that an employee could slip or fall into the water((~~, the employer shall ensure that the outer perimeter of the working surface is protected by posting or other portable protection such as roping off, and that employees wear a personal flotation device meeting the requirements of WAC 296-56-60115(2)~~)).

AMENDATORY SECTION (Amending WSR 12-24-071, filed 12/4/12, effective 1/4/13)

WAC 296-56-60229 Sanitation. (1) You must meet the following requirements for washing and toilet facilities((~~.~~)):

(a) ((~~The employer shall~~)) You must provide accessible washing and toilet facilities sufficient for the sanitary requirements of employees. The facilities ((~~shall~~)) must have:

(i) Running water, including hot and cold or tepid water (when cargo handling is conducted at locations without permanent facilities, containers of potable water may be provided in lieu of running water);

(ii) Soap;

(iii) Individual hand towels, clean individual sections of continuous toweling or air blowers; and

(iv) Fixed or portable toilets in separate compartments with latch-equipped doors.

(b) Separate toilet facilities ((~~shall~~)) must be provided for male and female employees except when toilet rooms are occupied by only one person at a time. A means of locking ((~~shall~~)) must be provided.

(c) Washing and toilet facilities ((~~shall~~)) must be regularly cleaned and maintained in good order.

(2) You must meet the following requirements for drinking water.

(a) Potable drinking water shall be accessible to employees at all times.

(b) Potable drinking water containers ((~~shall~~)) must be clean, containing only water and ice, and ((~~shall~~)) must be fitted with covers.

(c) Common drinking cups are prohibited.

(3) ((~~Prohibited eating areas.~~)) You must prohibit consumption of food or beverages in areas where hazardous materials are being stored or handled ((~~shall be prohibited~~)).

(4) ((~~Garbage and overboard discharges. Work shall not be~~)) You must prohibit work from being conducted in the immediate vicinity of uncovered garbage or in the area of overboard discharges from the vessel's sanitary lines unless employees are protected from the garbage or discharge by a baffle or splash boards.

AMENDATORY SECTION (Amending WSR 86-03-064, filed 1/17/86)

WAC 296-56-60231 Signs and marking. (1) ((~~General.~~)) You must makes sure signs required by this chapter ((~~shall be~~)) are clearly worded and legible. They ((~~shall~~)) must contain a key word or legend indicating the reason for the sign.

(a) Key words are such words as danger, warning, caution.

(b) Legends are more specific explanations such as high voltage, close clearance, pedestrian crossing.

(2) ((~~Specific.~~)) You must make sure every marine terminal ((~~shall have~~)) has conspicuously posted signs as follows:

(a) Locations of first-aid facilities;

(b) Locations of telephones;

(c) Telephone numbers of the closest ambulance service, hospital or other source of medical attention, police, fire department, and emergency squad (if any); and

(d) Locations of firefighting and emergency equipment and fire exits.

((~~PART K—RELATED TERMINAL OPERATIONS AND EQUIPMENT~~))

NEW SECTION

WAC 296-56-60232 Related terminal operations and equipment.

Summary

This section applies to all related terminal operations and equipment in your workplace.

Your responsibility: To protect employees from terminal operations related to hazards in your workplace.

You must meet the requirements…	**in this section:**
Related terminal operations and equipment —Machine guarding	WAC 296-56-60233
Welding, cutting and heating (hot work) (see also definition of "hazardous cargo, material, substance or atmosphere")	WAC 296-56-60235
Spray painting	WAC 296-56-60237
Compressed air	WAC 296-56-60239
Air receivers	WAC 296-56-60241
Fuel handling and storage	WAC 296-56-60243

You must meet the requirements…	in this section:
Battery charging and changing	WAC 296-56-60245
Prohibited operations	WAC 296-56-60247
Petroleum docks	WAC 296-56-60249
Boat marinas	WAC 296-56-60251
Canneries and cold storage docks	WAC 296-56-60253
Excerpts from Revised Code of Washington	WAC 296-56-60255
Form—Appendix A—Standard signals for longshore crane signals	WAC 296-56-99002
Form—Appendix B—Standard signals for longshore crane signals	WAC 296-56-99003

AMENDATORY SECTION (Amending WSR 00-21-103, filed 10/18/00, effective 2/1/01)

WAC 296-56-60233 Related terminal operations and equipment—Machine guarding. (1) ((~~Definition. "Guarded" means shielded, fenced, or enclosed by covers, casings, shields, troughs, spillways or railings, or guarded by position or location. Examples of guarding methods are guarding by location (positioning hazards so they are inaccessible to employees) and point of operation guarding (using barrier guards, two-hand tripping devices, electronic safety devices, or other such devices).~~

~~(2) General.~~)) You must meet the following general requirements for machine guarding:

(a) Danger zones on machines and equipment used by employees ((~~shall~~)) must be guarded.

(b) Where chips and dust produced by machine operation may result in a hazard to the operator, the machinery ((~~shall~~)) must be equipped with an effective exhaust system at the point of origin, or other equally effective means ((~~shall~~)) must be provided to protect the operator.

(c) Fixed machinery ((~~shall~~)) must be secured to preventing.

(d) A power cut-off device for machinery and equipment ((~~shall~~)) must be provided at the operator's working position.

(e) Machines driven by belts and shafting ((~~shall~~)) must be fitted with a belt-locking or equivalent protective device if the belt can be shifted.

(f) In operations where injury to the operator might result if motors were to restart after power failures, provisions ((~~shall~~)) must be made to prevent machines from automatically restarting upon restoration of power.

(g) The power supply to machines ((~~shall~~)) must be turned off, locked out, and tagged out during repair, adjustment, or servicing.

(h) Machines ((~~shall~~)) must be maintained in a safe working condition.

(i) Only designated employees ((~~shall~~)) must maintain or repair machinery and equipment.

(j) Machines with defects that affect the safety of operation ((~~shall~~)) must not be used.

((~~(3)~~)) (2) You must guard hand-fed circular ripsaws and hand-fed circular crosscut table saws((~~.~~)) as follows unless fixed or manually adjustable enclosures or guarding provides equivalent protection((~~, hand-fed circular ripsaws and hand-fed circular crosscut table saws shall be guarded as follows~~)):

(a) ((~~They shall be~~)) Equipped with hoods completely enclosing those portions of the saw above the table and the material being cut;

(b) ((~~They shall~~)) Have spreaders to prevent material from squeezing the saw. Spreaders ((~~shall~~)) must be in true alignment with the saw. Spreaders may be removed only during grooving, dadoing, or rabbeting operations, and ((~~shall~~)) must be replaced at the completion of such operations; and

(c) ((~~They shall~~)) Have nonkickback fingers or dogs to oppose the tendency of the saw to pick up material or throw material toward the operator.

((~~(4)~~)) (3) You must guard swing cutoff saws((~~.~~)) as follows:

(a) Swing cutoff saws ((~~shall~~)) must have hoods completely enclosing the upper half of the saw, the arbor end and the point of operation at all saw positions to protect the operator from material thrown up by the saw. The hood ((~~shall~~)) must automatically cover the lower portion of the blade so that when the saw returns to the back of the table the hood rises on top of the fence, and when the saw is moved forward the hood drops on top, remaining in contact with the table or the material.

(b) Swing cutoff saws ((~~shall~~)) must have a device to return the saw automatically to the back of the table without rebound. The device ((~~shall~~)) must not be dependent upon rope, cord or springs.

(c) Devices ((~~shall~~)) must be provided to prevent saws from swinging beyond the front or back edges of the table.

(d) Inverted swing cutoff saws ((~~shall~~)) must have hoods covering the part of the saw protruding above the table top or the material being cut. Hoods ((~~shall~~)) must automatically adjust to the thickness of, and remain in contact with, material being cut.

((~~(5)~~)) (4) You must guard radial saws((~~.~~)) as follows, unless fixed or manually adjustable enclosures or guards provide equivalent protection((~~, radial saws shall be guarded as follows~~)):

(a) The upper hood of radial saws ((~~shall~~)) must enclose the upper portion of the blade up to and including the end of the saw arbor and ((~~shall~~)) must protect the operator from being struck by debris. The sides of the lower exposed portion of the blade ((~~shall~~)) must be guarded to the blade diameter by a device automatically adjusting to the thickness of the stock and remaining in contact with the stock. The lower guard may be removed only when the saw is used for bevel cuts;

(b) Radial saws used for ripping ((~~shall~~)) must have nonkickback fingers or dogs on both sides to oppose the thrust or tendency of the saw to pick up material or throw material toward the operator;

(c) An adjustable stop ((~~shall~~)) must be provided to prevent travel of radial saw blades beyond the table's edge;

(d) Radial saws ((~~shall~~)) must be installed so that the cutting head returns to the starting position without rebound when released; and

(e) ((~~The employer shall~~)) You must direct that employees perform ripping and ploughing against the saw turning direction. Rotation direction and an indication of the end of the saw to be used ((~~shall~~)) must be conspicuously marked on the hood.

((~~(6)~~)) (5) You must guard band saws and band resaws((~~.~~)) as follows:

(a) Saw blades and band saw wheels ((~~shall~~)) must be enclosed or guarded, except for the working portion of the blade between the bottom of the guide rolls and the table, to protect employees from point-of-operation hazards and flying debris.

(b) Band saws ((~~shall~~)) must be equipped with brakes to stop the band saw wheel if the blade breaks.

(c) Band saws ((~~shall~~)) must be equipped with a tension control device to keep the blade taut.

((~~(7)~~)) (6) You must guard abrasive wheels and machinery((~~.~~)) as follows:

(a) Abrasive wheels ((~~shall~~)) must be used only on machines having enclosure guards to restrain pieces of grinding wheels and to protect employees if the wheel breaks, except as provided in (b) and (c) of this subsection. Where the operator stands in front of the safety guard opening, the safety guard ((~~shall~~)) must be adjustable or have an adjustable tongue or piece at the top of the opening. The safety guard or the tongue ((~~shall~~)) must be adjusted so that it is always within one-fourth inch of the periphery of the wheel. Guards ((~~shall~~)) must be aligned with the wheel and the strength of fastenings ((~~shall~~)) must be greater than the strength of the guard.

(b) When the work provides equivalent protection, or when the machine is designed as a portable saw, guards may be constructed with the spindle end, nut and outer flange exposed. When the work entirely covers the side of the wheel, the side covers of the guard may be removed.

(c) Guarding is not required:

(i) For wheels used for internal work while the wheel is contained within the work being ground; or

(ii) For mounted wheels two inches (5 cm) and smaller in diameter used in portable operations.

(d) Work rests ((~~shall~~)) must be used on fixed grinding machines. Work rests ((~~shall~~)) must be rigidly constructed and adjustable for wheel wear. They ((~~shall~~)) must be adjusted closely to the wheel with a maximum opening of one-eighth inch (3.18 mm) and ((~~shall~~)) must be securely clamped. Adjustment ((~~shall~~)) must not be made while the wheel is in motion.

(e) Grinding wheels ((~~shall~~)) must fit freely on the spindle. The spindle nut ((~~shall~~)) must be tightened only enough to hold the wheel in place.

(f) Grinding machine wheels ((~~shall~~)) must turn at a speed that is compatible with the rated speed of the wheel.

(g) Flanges and blotters ((~~shall~~)) must be used only with wheels designed for their use. Flanges ((~~shall~~)) must be of a type ensuring retention of pieces of the wheel in case of breakage.

(h) Abrasive wheels with operational defects ((~~shall~~)) must not be used.

((~~(8)~~)) (7) You must guard rotating parts, drives and connections((~~.~~)) as follows:

(a) Rotating parts, such as gears and pulleys, that are located seven feet (2.13 m) or less above working surfaces ((~~shall~~)) must be guarded to prevent employee contact with moving parts.

(b) Belt, rope and chain drives ((~~shall~~)) must be guarded to prevent employees from coming into contact with moving parts.

(c) Gears, sprockets and chains ((~~shall~~)) must be guarded to prevent employees coming into contact with moving parts. This requirement does not apply to manually operated sprockets.

AMENDATORY SECTION (Amending WSR 14-07-086, filed 3/18/14, effective 5/1/14)

WAC 296-56-60235 Welding, cutting and heating (hot work) (see also definition of "hazardous cargo, material, substance or atmosphere"). (1) ((~~Definition. "Hot work" means riveting, welding, flame cutting or other fire or spark-producing operation.~~

~~(2)~~)) You must make sure hot work is not performed in confined space((~~s. Hot work shall not be performed in a confined space~~)) until all requirements of chapter 296-809 WAC, are met.

((~~(3)~~)) (2) You must provide fire protection((~~.~~)) for employees performing hot work as follows:

(a) To the extent possible, hot work ((~~shall~~)) must be performed in designated locations that are free of fire hazards.

(b) When hot work must be performed in a location that is not free of fire hazards, all necessary precautions ((~~shall~~)) must be taken to confine heat, sparks, and slag so that they cannot contact flammable or combustible material.

(c) Fire extinguishing equipment suitable for the location ((~~shall~~)) must be immediately available and ((~~shall~~)) must be maintained in readiness for use at all times.

(d) When the hot work operation is such that normal fire prevention precautions are not sufficient, additional personnel ((~~shall~~)) must be assigned to guard against fire during hot work and for a sufficient time after completion of the work to ensure that no fire hazard remains. The employer ((~~shall~~)) must instruct all employees involved in hot work operations as to potential fire hazards and the use of firefighting equipment.

(e) Drums and containers which contain or have contained flammable liquids ((~~shall~~)) must be kept closed. Empty containers ((~~shall~~)) must be removed from the hot work area.

(f) When openings or cracks in flooring cannot be closed, precautions ((~~shall~~)) must be taken to ensure that no employees or flammable or combustible materials are exposed to sparks dropping through the floor. Similar precautions ((~~shall~~)) must be taken regarding cracks or holes in walls, open doorways and open or broken windows.

(g) Hot work shall not be performed:

(i) In flammable or potentially flammable atmospheres;

(ii) On or in equipment or tanks that have contained flammable gas or liquid or combustible liquid or dust-producing material, until a designated person has tested the atmosphere inside the equipment or tanks and determined that it is not hazardous; or

(iii) Near any area in which exposed readily ignitable materials such as bulk sulphur, baled paper or cotton are stored. Bulk sulphur is excluded from this prohibition if suitable precautions are followed, the person in charge is knowledgeable and the person performing the work has been instructed in preventing and extinguishing sulphur fires.

(h)((~~(i)~~)) Drums, containers or hollow structures that have contained flammable or combustible substances ((~~shall~~)) must either be filled with water or cleaned, and ((~~shall~~)) must then be ventilated.

(i) A designated person ((~~shall~~)) must test the atmosphere and determine that it is not hazardous before hot work is performed on or in such structures.

(ii) Before heat is applied to a drum, container or hollow structure, an opening to release built-up pressure during heat application ((~~shall~~)) must be provided.

((~~(4)~~)) (3) You must follow these requirements for gas welding and cutting((~~.~~)):

(a) Compressed gas cylinders must be used only as follows:

(i) ((~~Shall~~)) Must have valve protection caps in place except when in use, hooked up or secured for movement. Oil ((~~shall~~)) must not be used to lubricate caps;

(ii) ((~~Shall~~)) Must be hoisted only while secured, as on a cradle or pallet, and ((~~shall~~)) must not be hoisted by magnet, choker sling or cylinder caps;

(iii) ((~~Shall~~)) Must be moved only by tilting or rolling on their bottom edges;

(iv) ((~~Shall~~)) Must be secured when moved by vehicle;

(v) ((~~Shall~~)) Must be secured while in use;

(vi) ((~~Shall~~)) Must have valves closed when cylinders are empty, being moved or stored;

(vii) ((~~Shall~~)) Must be secured upright except when hoisted or carried;

(viii) ((~~Shall~~)) Must not be freed when frozen by prying the valves or caps with bars or by hitting the valve with a tool;

(ix) ((~~Shall~~)) Must not be thawed by boiling water;

(x) ((~~Shall~~)) Must not be exposed to sparks, hot slag, or flame;

(xi) ((~~Shall~~)) Must not be permitted to become part of electrical circuits or have electrodes struck against them to strike arcs;

(xii) ((~~Shall~~)) Must not be used as rollers or supports;

(xiii) ((~~Shall~~)) Must not have contents used for purposes not authorized by the supplier;

(xiv) ((~~Shall~~)) Must not be used if damaged or defective;

(xv) ((~~Shall~~)) Must not have gases mixed within, except by gas suppliers;

(xvi) ((~~Shall~~)) Must be stored so that oxygen cylinders are separated from fuel gas cylinders and combustible materials by either a minimum distance of twenty feet (6.1 m) or a barrier having a fire-resistance rating of thirty minutes; and

(xvii) ((~~Shall~~)) Must not have objects that might either damage the safety device or obstruct the valve placed on top of the cylinder when in use.

(b) ((~~Use of fuel gas.~~)) Fuel gas ((~~shall~~)) must be used only as follows:

(i) Before regulators are connected to cylinder valves, the valves ((~~shall~~)) must be opened slightly (cracked) and closed immediately to clear away dust or dirt. Valves ((~~shall~~)) must not be cracked if gas could reach possible sources of ignition;

(ii) Cylinder valves ((~~shall~~)) must be opened slowly to prevent regulator damage and ((~~shall~~)) must not be opened more than one and one-half turns. Any special wrench required for emergency closing ((~~shall~~)) must be positioned on the valve stem during cylinder use. For manifolded or coupled cylinders, at least one wrench ((~~shall~~))

must be immediately available. Nothing ((~~shall~~)) must be placed on top of a cylinder or associated parts when the cylinder is in use;

(iii) Pressure-reducing regulators ((~~shall~~)) must be attached to cylinder valves when cylinders are supplying torches or devices equipped with shut-off valves;

(iv) Cylinder valves ((~~shall~~)) must be closed and gas released from the regulator or manifold before regulators are removed;

(v) Leaking fuel gas cylinder valves ((~~shall~~)) must be closed and the gland nut tightened. If the leak continues, the cylinder ((~~shall~~)) must be tagged, removed from service, and moved to a location where the leak will not be hazardous. If a regulator attached to a valve stops a leak, the cylinder need not be removed from the workplace but ((~~shall~~)) must be tagged and may not be used again before it is repaired; and

(vi) If a plug or safety device leaks, the cylinder ((~~shall~~)) must be tagged, removed from service, and moved to a location where the leak will not be hazardous.

(c) Hose((~~.~~)) must be used only as follows:

(i) Fuel gas and oxygen hoses ((~~shall~~)) must be easily distinguishable from each other by color or sense of touch. Oxygen and fuel hoses ((~~shall~~)) must not be interchangeable. Hoses having more than one gas passage ((~~shall~~)) must not be used.

(ii) When oxygen and fuel gas hoses are taped together, not more than four of each twelve inches (10.16 cm of each 30.48 cm) ((~~shall~~)) must be taped.

(iii) Hose ((~~shall~~)) must be inspected before use. Hose subjected to flashback or showing evidence of severe wear or damage ((~~shall~~)) must be tested to twice the normal working pressure but not less than two hundred p.s.i. (1378.96 kPa) before reuse. Defective hose ((~~shall~~)) must not be used.

(iv) Hose couplings ((~~shall~~)) must not unlock or disconnect without rotary motion.

(v) Hose connections ((~~shall~~)) must be clamped or securely fastened to withstand twice the normal working pressure but not less than three hundred p.s.i. (2068.44 kPa) without leaking.

(vi) Gas hose storage boxes ((~~shall~~)) must be ventilated.

(d) Torches((~~.~~)) must be used only as follows:

(i) Torch tip openings ((~~shall~~)) must only be cleaned with devices designed for that purpose.

(ii) Torches ((~~shall~~)) must be inspected before each use for leaking shut-off valves, hose couplings and tip connections. Torches ((~~shall~~)) must be inspected before each use for leaking shut-off valves, hose couplings and tip connections. Torches with such defects ((~~shall~~)) must not be used.

(iii) Torches ((~~shall~~)) must not be lighted from matches, cigarette lighters, other flames or hot work.

(e) ((~~Pressure regulators.~~)) Pressure regulators, including associated gauges, ((~~shall~~)) must be maintained in safe working order.

(f) ((~~Operational precaution.~~)) Gas welding equipment ((~~shall~~)) must be maintained free of oil and grease.

((~~(5)~~)) (4) You must meet these requirements for arc welding and cutting((~~.~~)):

(a) Manual electrode holders((~~.~~)) must be used as follows:

(i) ((~~The employer shall~~)) You must ensure that only manual electrode holders intended for arc welding and cutting and capable of handling the maximum current required for such welding or cutting ((~~shall~~)) must be used.

(ii) Current-carrying parts passing through those portions of the holder gripped by the user and through the outer surfaces of the jaws of the holder ((~~shall~~)) must be insulated against the maximum voltage to ground.

(b) Welding cables and connectors((~~.~~)) must be used as follows:

(i) Arc welding and cutting cables ((~~shall~~)) must be insulated, flexible and capable of handling the maximum current required by the operation, taking into account the duty cycles.

(ii) Only cable free from repair or splice for ten feet (3 m) from the electrode holder ((~~shall~~)) must be used unless insulated connectors or splices with insulating quality equal to that of the cable are provided.

(iii) When a cable other than the lead mentioned in (b)(ii) of this subsection wears and exposes bare conductors, the portion exposed ((~~shall~~)) must not be used until it is protected by insulation equivalent in performance capacity to the original.

(iv) Insulated connectors of equivalent capacity ((~~shall~~)) must be used for connecting or splicing cable. Cable lugs, where used as connectors, ((~~shall~~)) must provide electrical contact. Exposed metal parts ((~~shall~~)) must be insulated.

(c) Ground returns and machine grounding((~~.~~)) must be used as follows:

(i) Ground return cables ((~~shall~~)) must have current-carrying capacity equal to or exceeding the total maximum output capacities of the welding or cutting units served.

(ii) Structures or pipelines, other than those containing gases or flammable liquids or conduits containing electrical circuits, may be used in the ground return circuit if their current-carrying capacity equals or exceeds the total maximum output capacities of the welding or cutting units served.

(iii) Structures or pipelines forming a temporary ground return circuit ((~~shall~~)) must have electrical contact at all joints. Arcs, sparks or heat at any point in the circuit ((~~shall~~)) must cause rejection as a ground circuit.

(iv) Structures or pipelines acting continuously as ground return circuits ((~~shall~~)) must have joints bonded and maintained to ensure that no electrolysis or fire hazard exists.

(v) Arc welding and cutting machine frames ((~~shall~~)) must be grounded, either through a third wire in the cable containing the circuit conductor or through a separate wire at the source of the current. Grounding circuits ((~~shall~~)) must have resistance low enough to permit sufficient current to flow to cause the fuse or circuit breaker to interrupt the current.

(vi) Ground connections ((~~shall~~)) must be mechanically and electrically adequate to carry the current.

(d) When electrode holders are left unattended, electrodes ((~~shall~~)) must be removed and holders placed to prevent employee injury.

(e) Hot electrode holders ((~~shall~~)) must not be dipped in water.

(f) ((~~The employer shall~~)) You must ensure that when arc welders or cutters leave or stop work or when machines are moved, the power supply switch is kept in the off position.

(g) Arc welding or cutting equipment having a functional defect ((~~shall~~)) must not be used.

(h)((~~(i)~~)) Arc welding and cutting operations ((~~shall~~)) must be separated from other operations by shields, screens, or curtains to

protect employees in the vicinity from the direct rays and sparks of the arc.

((~~(ii)~~)) (i) Employees in areas not protected from the arc by screening ((~~shall~~)) must be protected by appropriate filter lenses in accordance with subsection (8) of this section.

(ii) When welders are exposed to their own arc or to each other's arc, they ((~~shall~~)) must wear filter lenses complying with the requirements of subsection (8) of this section.

(i) The control apparatus of arc welding machines ((~~shall~~)) must be enclosed, except for operating wheels, levers, and handles.

(j) Input power terminals, top change devices and live metal parts connected to input circuits ((~~shall~~)) must be enclosed and accessible only by means of insulated tools.

(k) When arc welding is performed in wet or high-humidity conditions, employees ((~~shall~~)) must use additional protection, such as rubber pads or boots, against electric shock.

((~~(6)~~)) (5) You must meet the following requirements in ventilation and employee protection in welding, cutting and heating((~~.~~)):

(a) ((~~Mechanical ventilation requirements. The employer shall~~)) You must ensure that general mechanical ventilation or local exhaust systems ((~~shall~~)) must meet the following requirements:

(i) General mechanical ventilation ((~~shall~~)) must maintain vapors, fumes and smoke below a hazardous level;

(ii) Local exhaust ventilation ((~~shall~~)) must consist of movable hoods positioned close to the work and ((~~shall~~)) must be of such capacity and arrangement as to keep breathing zone concentrations below hazardous levels;

(iii) Exhausts from working spaces ((~~shall~~)) must be discharged into the open air, clear of intake air sources;

(iv) Replacement air ((~~shall~~)) must be clean and respirable; and

(v) Oxygen ((~~shall~~)) must not be used for ventilation, cooling or cleaning clothing or work areas.

(b) ((~~Hot work in confined spaces.~~)) You must ensure that when hot work is performed in a confined space, in addition to the requirements of chapter 296-809 WAC and except as specified in (c)(ii) and (iii) of this subsection, ((~~when hot work is performed in a confined space the employer shall, in addition to the requirements of chapter 296-809 WAC, ensure that~~)) the following requirements for ventilation are met:

(i) General mechanical or local exhaust ventilations ((~~shall~~)) must be provided; or

(ii) Employees in the space ((~~shall~~)) must wear respirators in accordance with chapter 296-842 WAC.

(c) Requirements for welding, cutting or heating of toxic metals((~~.~~)) are as follows:

(i) In confined or enclosed spaces, hot work involving the following metals ((~~shall~~)) must only be performed with general mechanical or local exhaust ventilation that ensures that employees are not exposed to hazardous levels of fumes:

(A) Lead base metals;

(B) Cadmium-bearing filler materials; and

(C) Chromium-bearing metals or metals coated with chromium-bearing materials.

(ii) In confined or enclosed spaces, hot work involving the following metals ((~~shall~~)) must only be performed with local exhaust ventilation meeting the requirements of this subsection or by employees

wearing supplied air respirators in accordance with chapter 296-842 WAC;

(A) Zinc-bearing base or filler metals or metals coated with zinc-bearing materials;

(B) Metals containing lead other than as an impurity, or coated with lead-bearing materials;

(C) Cadmium-bearing or cadmium-coated base metals; and

(D) Metals coated with mercury-bearing materials.

(iii) Employees performing hot work in confined or enclosed spaces involving beryllium-containing base or filler metals ((~~shall~~)) must be protected by local exhaust ventilation and wear supplied air respirators or self-contained breathing apparatus, in accordance with the requirements of chapter 296-842 WAC.

(iv) ((~~The employer shall~~)) You must ensure that employees performing hot work in the open air that involves any of the metals listed in (c)(i) and (ii) of this subsection ((~~shall~~)) must be protected by respirators in accordance with the requirements of chapter 296-842 WAC and those working on beryllium-containing base or filler metals ((~~shall~~)) must be protected by supplied air respirators, in accordance with the requirements of chapter 296-842 WAC.

(v) Any employee exposed to the same atmosphere as the welder or burner ((~~shall~~)) must be protected by the same type of respiratory and other protective equipment as that worn by the welder or burner.

(d) ((~~Inert-gas metal-arc welding.~~)) You must make sure employees ((~~shall~~)) will not engage in and ((~~shall~~)) not be exposed to the inert-gas metal-arc welding process unless the following precautions are taken:

(i) Chlorinated solvents ((~~shall~~)) must not be used within two hundred feet (61 m) of the exposed arc. Surfaces prepared with chlorinated solvents ((~~shall~~)) must be thoroughly dry before welding is performed on them.

(ii) Employees in areas not protected from the arc by screening ((~~shall~~)) must be protected by appropriate filter lenses in accordance with the requirements of subsection ((~~(8)~~)) (7) of this section. When welders are exposed to their own arc or to each other's arc, filter lenses complying with the requirements of subsection ((~~(8)~~)) (7) of this section ((~~shall~~)) must be worn to protect against flashes and radiant energy.

(iii) Employees exposed to radiation ((~~shall~~)) must have their skin covered completely to prevent ultraviolet burns and damage. Helmets and hand shields ((~~shall~~)) must not have leaks, openings or highly reflective surfaces.

(iv) Inert-gas metal-arc welding on stainless steel ((~~shall~~)) must not be performed unless exposed employees are protected either by local exhaust ventilation or by wearing supplied air respirators in accordance with the requirements of chapter 296-842 WAC.

((~~(7)~~)) (6) You must meet these requirements for welding, cutting and heating on preservative coatings((~~.~~)):

(a) Before hot work is commenced on surfaces covered by a preservative coating of unknown flammability, a test ((~~shall~~)) must be made by a designated person to determine the coating's flammability. Preservative coatings ((~~shall~~)) must be considered highly flammable when scrapings burn with extreme rapidity.

(b) Appropriate precaution ((~~shall~~)) must be taken to prevent ignition of highly flammable hardened preservative coatings. Highly flammable coatings ((~~shall~~)) must be stripped from the area to be

heated. An uncoiled fire hose with fog nozzle, under pressure, ((~~shall~~)) must be immediately available in the hot work area.

(c) Surfaces covered with preservative coatings ((~~shall~~)) must be stripped for at least four inches (10.16 cm) from the area of heat application or employees ((~~shall~~)) must be protected by supplied air respirators in accordance with the requirements of chapter 296-842 WAC.

((~~(8) Protection~~)) (7) You must protect employees against radiant energy((~~.~~)) as follows:

(a) Employees ((~~shall~~)) must be protected from radiant energy eye hazards by spectacles, cup goggles, helmets, hand shields or face shields with filter lenses complying with the requirements of this subsection.

(b) Filter lenses ((~~shall~~)) must have an appropriate shade number, as indicated in Table G-1, for the work performed. Variations of one or two shade numbers are permissible to suit individual preferences.

(c) If filter lenses are used in goggles worn under the helmet, the shade numbers of both lenses equals the value shown in Table G-1 for the operation.

Table G-1((~~.~~))
Filter Lenses for Protection Against Radiant Energy

Operation	Shade No.
Soldering((~~.....~~))	2
Torch Brazing((~~.....~~))	3 or 4
Light Cutting, up to 1 inch((~~.....~~))	3 or 4
Medium Cutting, 1-6 inches((~~.....~~))	4 or 5
Heavy Cutting, over 6 inches((~~.....~~))	5 or 6
Light Gas Welding, up to 1/8 inch((~~.....~~))	4 or 5
Medium Gas Welding, 1/8-1/2 inch((~~.....~~))	5 or 6
Heavy Gas Welding, over 1/2 inch((~~.....~~))	6 or 8
Shielded Metal-Arc Welding 1/16 to 5/32-inch electrodes((~~.....~~))	10
Inert Gas Metal-Arc Welding (nonferrous) 1/16 to 5/32-inch electrodes((~~.....~~))	11
Shielded Metal-Arc Welding:	
3/16 to 1/4-inch electrodes((~~.....~~))	12
5/16 and 3/8-inch electrodes((~~.....~~))	14

AMENDATORY SECTION (Amending WSR 00-21-103, filed 10/18/00, effective 2/1/01)

WAC 296-56-60237 Spray painting. (1) ((~~Scope.~~)) This section covers painting operations connected with maintenance of structures, equipment and gear at the marine terminal and of transient equipment serviced at the terminal. It does not apply to overall painting of terminal structures under construction, major repair or rebuilding of terminal structures, or portable spraying apparatus not used regularly in the same location.

(2) ((~~Definitions.~~

~~(a) "Spraying area" means any area where flammable vapors, mists or combustible residues, dusts or deposits may be present due to paint spraying operations.~~

~~(b) "Spray booth" means an enclosure containing a flammable or combustible spraying operation and confining and limiting the escape of paint, vapor and residue by means of a powered exhaust system.~~

~~(c) "Approved" means, for the purpose of this section, that the equipment has been approved for the specified use by a nationally recognized testing laboratory.~~)) For the purpose of this section, approved means that the equipment has been approved for the specified use by a nationally recognized testing laboratory.

(3) You must meet the following spray painting requirements for indoor and outdoor spraying areas and booths((~~.~~)):

(a) Shut-off valves, containers or piping with attached hoses or flexible connections ((~~shall~~)) must have shut-off valves closed at the connection when not in use.

(b) Pumps used to transfer paint supplies ((~~shall~~)) must have automatic pressure-relieving devices.

(c) Hoses and couplings ((~~shall~~)) must be inspected before use. Hoses showing deterioration, leakage or weakness in the carcass or at the couplings ((~~shall~~)) must be removed from service.

(d)((~~(i)~~)) No open flame or spark-producing equipment ((~~shall~~)) must be within twenty feet (6.1 m) of a spraying area unless it is separated from the spraying area by a fire-retardant partition.

((~~(ii)~~)) (i) Hot surfaces ((~~shall~~)) must not be located in spraying areas.

((~~(iii)~~)) (ii) Whenever combustible residues may accumulate on electrical installations, wiring ((~~shall~~)) must be in rigid conduit or in boxes containing no taps, splices or connections.

((~~(iv)~~)) (iii) Portable electric lights ((~~shall~~)) must not be used during spraying operations. Lights used during cleaning or repairing operations ((~~shall~~)) must be approved for the location in which they are used.

(e) When flammable or combustible liquids are being transferred between containers, both containers ((~~shall~~)) must be bonded and grounded.

(f)((~~(i)~~)) Spraying ((~~shall~~)) must be performed only in designated spray booths or spraying areas.

((~~(ii)~~)) (i) Spraying areas ((~~shall~~)) must be kept as free from combustible residue accumulations as practical.

((~~(iii)~~)) (ii) Residue scrapings, debris, rags, and waste ((~~shall~~)) must be removed from the spraying area as they accumulate.

(g) Spraying with organic peroxides and other dual-component coatings ((~~shall~~)) must only be conducted in sprinkler-equipped spray booths.

(h) Only the quantity of flammable or combustible liquids required for the operation ((~~shall~~)) must be allowed in the spraying area, and in no case ((~~shall~~)) must the amount exceed a one-day supply.

(i) Smoking ((~~shall~~)) must be prohibited and "No Smoking" signs ((~~shall~~)) must be posted in spraying and paint storage areas.

(4) You must meet these additional requirements for spraying areas and spray booths((~~.~~)):

(a) Distribution or baffle plates ((~~shall~~)) must be of noncombustible material and ((~~shall~~)) must be removable or accessible for cleaning. They ((~~shall~~)) must not be located in exhaust ducts.

(b) Any discarded filter ((~~shall~~)) must be removed from the work area or placed in water.

(c) Filters ((~~shall~~)) must not be used when the material being sprayed is highly susceptible to spontaneous heating and ignition.

(d) Filters ((~~shall~~)) must be noncombustible or of an approved type. The same filter ((~~shall~~)) must not be used when spraying with different coating materials if the combination of materials may spontaneously ignite.

(e) Spraying areas ((~~shall~~)) must be mechanically ventilated for removal of flammable and combustible vapor and mist.

(f) Mechanical ventilation ((~~shall~~)) must be in operation during spraying operations and long enough thereafter to exhaust hazardous vapor concentrations.

(g) Rotating fan elements ((~~shall~~)) must be nonsparking or the casing ((~~shall~~)) must consist of or be lined with nonsparking material.

(h) Piping systems conveying flammable or combustible liquids to the spraying booth or area ((~~shall~~)) must be made of metal and be both electrically bonded and grounded.

(i) Air exhausted from spray operations ((~~shall~~)) must not contaminate makeup air or other ventilation intakes. Exhausted air ((~~shall~~)) must not be recirculated unless it is first cleaned of any hazardous contaminants.

(j) Original closed containers, approved portable tanks, approved safety cans or a piping system ((~~shall~~)) must be used to bring flammable or combustible liquids into spraying areas.

(k) If flammable or combustible liquids are supplied to spray nozzles by positive displacement pumps, the pump discharge line ((~~shall~~)) must have a relief valve discharging either to a pump section or detached location, or the line ((~~shall~~)) must be equipped with a device to stop the prime mover when discharge pressure exceeds the system's safe operating pressure.

(l) Wiring, motors and equipment in a spray booth ((~~shall~~)) must be of approved explosion-proof type for Class I, Group D locations and conform with the requirements of chapter 296-24 WAC Part L for Class I, Division 1, Hazardous Locations. Wiring, motors and equipment within twenty feet (6.1 m) of any interior spraying area and not separated by vapor-tight partitions ((~~shall~~)) must not produce sparks during operation and ((~~shall~~)) must conform to the requirements of chapter 296-24 WAC Part L for Class I, Division 2, Hazardous Locations.

(m) Outside electrical lights within ten feet (3.05 m) of spraying areas and not separated from the areas by partitions ((~~shall~~)) must be enclosed and protected from damage.

(5) You must meet these additional requirements for spray booths((~~.~~)):

(a) Spray booths ((~~shall~~)) must be substantially constructed of noncombustible material and have smooth interior surfaces. Spray booth floors ((~~shall~~)) must be covered with noncombustible material. As an aid to cleaning, paper may be used to cover the floor during painting operations if it is removed after the painting is completed.

(b) Spray booths ((~~shall~~)) must be separated from other operations by at least 3 feet (0.91 m) or by fire-retardant partitions or walls.

(c) A space of at least 3 feet (0.91 m) on all sides of the spray booth ((~~shall~~)) must be maintained free of storage or combustible materials.

(d) Metal parts of spray booths, exhaust ducts, pipings, airless high-pressure spray guns and conductive objects being sprayed ((~~shall~~)) must be grounded.

(e) Electric motors driving exhaust fans ((~~shall~~)) must not be located inside booths or ducts.

(f) Belts ((~~shall~~)) must not enter ducts or booths unless the belts are completely enclosed.

(g) Exhaust ducts ((~~shall~~)) must be made of steel, ((~~shall~~)) must have sufficient access doors to permit cleaning, and ((~~shall~~)) must have a minimum clearance of 18 inches (0.46 m) from combustible materials. Any installed dampers ((~~shall~~)) must be fully opened when the ventilating system is operating.

(h) Spray booths ((~~shall~~)) must not be alternately used to spray different types of coating materials if the combination of the materials may spontaneously ignite unless deposits of the first material are removed from the booth and from exhaust ducts before spraying of the second material begins.

AMENDATORY SECTION (Amending WSR 92-22-067, filed 10/30/92, effective 12/8/92)

WAC 296-56-60239 Compressed air. You must make sure employees ((~~shall be~~)) are protected by appropriate eye protection and personal protective equipment complying with the requirements of WAC 296-56-60109 through 296-56-60115 during cleaning with compressed air. Compressed air used for cleaning ((~~shall~~)) must not exceed a pressure of thirty p.s.i. Compressed air ((~~shall~~)) must not be used to clean employees.

AMENDATORY SECTION (Amending WSR 86-03-064, filed 1/17/86)

WAC 296-56-60241 Air receivers. (1) ((~~Application.~~)) This section applies to compressed air receivers and equipment used for operations such as cleaning, drilling, hoisting and chipping. It does not apply to equipment used to convey materials or in transportation applications such as railways, vehicles or cranes.

(2) You must meet the following requirements for gauges and valves((~~.~~)):

(a) Air receivers ((~~shall~~)) must be equipped with indicating pressure gauges and spring-loaded safety valves. Safety valves ((~~shall~~)) must prevent receiver pressure from exceeding one hundred ten percent of the maximum allowable working pressure.

(b) No other valves ((~~shall~~)) must be placed between air receivers and their safety valves.

AMENDATORY SECTION (Amending WSR 04-11-066, filed 5/18/04, effective 7/1/04)

WAC 296-56-60243 Fuel handling and storage. (1) You must meet the following requirements for liquid fuel((~~.~~)):

(a) Only designated persons ((~~shall~~)) must conduct fueling operations.

(b) In case of spillage, filler caps ((~~shall~~)) must be replaced and spillage disposed of before engines are started.

(c) Engines ((~~shall~~)) must be stopped and operators ((~~shall~~)) must not be on the equipment during refueling operations.

(d) Smoking and open flames ((~~shall~~)) must be prohibited in areas used for fueling, fuel storage or enclosed storage of equipment containing fuel.

(e) Equipment ((~~shall~~)) must be refueled only at designated locations.

(f) Liquid fuels not handled by pump ((~~shall~~)) must be handled and transported only in portable containers designed for that purpose. Portable containers ((~~shall~~)) must be metal, have tight closures with screw or spring covers and ((~~shall~~)) must be equipped with spouts or other means to allow pouring without spilling. Leaking containers ((~~shall~~)) must not be used.

(g) Flammable liquids ((~~shall~~)) must only be dispensed in the open from a tank or from other vehicles equipped for delivering fuel to another vehicle if:

(i) Dispensing hoses do not exceed fifty feet (15.24 m) in length; and

(ii) Any powered dispensing nozzles are of the automatic-closing type.

(h) Liquid fuel dispensing devices ((~~shall~~)) must be provided with an easily accessible and clearly identified shutoff device, such as a switch or circuit breaker, to shut off the power in an emergency.

(i) Liquid fuel dispensing devices, such as pumps, ((~~shall~~)) must be mounted either on a concrete island or be otherwise protected against collision damage.

(2) You must meet these requirements for liquefied gas fuels((~~.~~)): See WAC 296-24-475 through 296-24-47517.

(a) Fueling locations.

(i) Liquefied gas powered equipment ((~~shall~~)) must be fueled only at designated locations.

(ii) Equipment with permanently mounted fuel containers ((~~shall~~)) must be charged outdoors.

(iii) Equipment ((~~shall~~)) must not be fueled or stored near underground entrances, elevator shafts or other places where gas or fumes might accumulate.

(b) Fuel containers.

(i) When removable fuel containers are used, the escape of fuel when containers are exchanged ((~~shall~~)) must be minimized by:

(A) Automatic quick-closing couplings (closing in both directions when uncoupled) in fuel lines; or

(B) Closing fuel container valves and allowing engines to run until residual fuel is exhausted.

(ii) Pressure-relief valve openings ((~~shall~~)) must be in continuous contact with the vapor space (top) of the cylinder.

(iii) Fuel containers ((~~shall~~)) must be secured to prevent their being jarred loose, slipping or rotating.

(iv) Containers ((~~shall~~)) must be located to prevent damage to the container. If located within a compartment, that compartment ((~~shall~~)) must be vented. Containers near the engine or exhaust system ((~~shall~~)) must be shielded against direct heat radiation.

(v) Container installation ((~~shall~~)) must provide the container with at least the vehicle's road clearance under maximum spring deflection, measured from the bottom of the container or to the lowest fitting on the container or housing, whichever is lower.

(vi) Valves and connections ((~~shall~~)) must be protected from contact damage. Permanent protection ((~~shall~~)) must be provided for fittings on removable containers.

(vii) Defective containers ((~~shall~~)) must be removed from service.

(c) Fueling operations((~~.~~)): See WAC 296-24-47517.

(i) Fueling operations for liquefied gas fuels ((~~shall~~)) must also comply with the requirements of subsection (1) of this section.

(ii) Using matches or flames to check for leaks is prohibited.

(iii) Containers ((~~shall~~)) must be examined before recharging and again before reuse for the following:

(A) Dents, scrapes and gouges of pressure vessels;

(B) Damage to valves and liquid level gauges;

(C) Debris in relief valves;

(D) Leakage at valves or connections; and

(E) Deterioration or loss of flexible seals in filling or servicing connections.

(d) Fuel storage. See WAC 296-24-47517(6).

(i) Stored fuel containers ((~~shall~~)) must be located to minimize exposure to excessive temperatures and physical damage.

(ii) Containers ((~~shall~~)) must not be stored near exits, stairways or areas normally used or intended for egress.

(iii) Outlet valves of containers in storage or transport ((~~shall~~)) must be closed. Relief valves ((~~shall~~)) must connect with vapor spaces.

(e) Vehicle storage and servicing.

(i) Liquefied gas fueled vehicles may be stored or serviced inside garages or shops only if there are no fuel system leaks.

(ii) Liquefied gas fueled vehicles under repair ((~~shall~~)) must have container shut-off valves closed unless engine operation is necessary for repairs.

(iii) Liquefied gas fueled vehicles ((~~shall~~)) must not be parked near open flames, sources of ignition or unventilated open pits.

AMENDATORY SECTION (Amending WSR 86-03-064, filed 1/17/86)

WAC 296-56-60245 Battery charging and changing. (1) You must make sure only designated persons ((~~shall~~)) change or charge batteries.

(2) You must make sure battery charging and changing ((~~shall be~~)) is only performed ((~~only~~)) in areas you have designated ((~~by the employer~~)) for battery charging and changing.

(3) You must prohibit smoking and other ignition sources ((~~are prohibited~~)) in charging areas.

(4) You must make sure filler caps ((~~shall be~~)) are in place when batteries are being moved.

(5) You must apply parking brakes ((~~shall be applied~~)) before batteries are charged or changed.

(6) You must make sure when a jumper battery is connected to a battery in a vehicle, the ground lead ((~~shall~~)) must connect to ground away from the vehicle's battery. Ignition, lights and accessories on the vehicle ((~~shall~~)) must be turned off before connections are made.

(7) You must make sure batteries ((~~shall be~~)) are free of corrosion buildup and cap vent holes ((~~shall be~~)) are open.

(8) You must provide adequate ventilation ((~~shall be provided~~)) during charging.

(9) You must provide facilities for flushing the eyes, body and work area with water ((~~shall be provided~~)) wherever electrolyte is handled, except when employees are only checking battery electrolyte levels or adding water.

(10) You must use carboy tilters or siphons ((~~shall be used~~)) to handle electrolyte in large containers.

(11) You must insulate or otherwise protect battery handling equipment which could contact battery terminals or cell connectors ((~~shall be insulated or otherwise protected~~)).

(12) You must make sure metallic objects ((~~shall not be~~)) are not placed on uncovered batteries.

(13) You must make sure vent caps are in place when batteries are being charged((~~, the vent caps shall be in place~~)).

(14) You must turn off chargers ((~~shall be turned off~~)) when leads are being connected or disconnected.

(15) You must secure installed batteries ((~~shall be secured~~)) to avoid physical or electrical contact with compartment walls or components.

AMENDATORY SECTION (Amending WSR 85-01-022, filed 12/11/84)

WAC 296-56-60247 Prohibited operations. (1) You must make sure spray painting and abrasive blasting operations ((~~shall not be~~)) are not conducted in the vicinity of cargo handling operations.

(2) You must make sure welding and burning operations ((~~shall not be~~)) are not conducted in the vicinity of cargo handling operations unless such hot work is part of the cargo operation.

AMENDATORY SECTION (Amending WSR 88-14-108, filed 7/6/88)

WAC 296-56-60249 Petroleum docks. (1) You must equip pipe lines which transport petroleum liquids from or to a wharf ((~~shall be equipped~~)) with valves on shore, so located as to be readily accessible and not endangered by fire on the wharf.

(2) You must provide drip pans, buckets, or other means ((~~shall be provided and shall~~)) that must be used to prevent oil spillage upon wharves during loading, disconnecting and draining hoses. After transfer is completed the contents of drip pans and buckets ((~~shall~~)) must be removed and taken to a place of disposal.

(3) You must make sure package goods, freight or ship stores ((~~shall not be~~)) are not swing-loaded or unloaded during the bulk han-

dling of oils or other flammable liquids in such a manner that the swing-loads will endanger the hose.

(4) You must make sure water lights for use at petroleum wharves ((~~shall be~~)) are a type which does not create a source of ignition.

AMENDATORY SECTION (Amending WSR 86-03-064, filed 1/17/86)

WAC 296-56-60251 Boat marinas. (1) You must inspect all hoisting equipment including derricks, cranes, or other devices used for boat launching, handling cargo, or supplies ((~~shall be inspected~~)) once a month. Records of this inspection ((~~shall~~)) must be made available upon request.

(2) Floating docks are not required to have bull rails unless lift trucks or other power driven equipment is used on the dock.

(3) You must post "No smoking" signs ((~~shall be posted~~)) in areas where fueling or flammable material is present.

(4) You must store flammable material or petroleum products ((~~shall be stored~~)) in a fireproof storage room or shed.

(5) You must clean slippery surfaces ((~~shall be cleaned~~)) and nonslip material ((~~shall~~)) must be used if necessary.

AMENDATORY SECTION (Amending WSR 86-03-064, filed 1/17/86)

WAC 296-56-60253 Canneries and cold storage docks. (1) You must inspect hoisting equipment used to load or unload cargo or supplies of fishing vessels ((~~shall be inspected~~)) once a month certified in accordance with the requirements of WAC 296-56-60093. The record of inspection ((~~shall~~)) must be made available upon request.

(2) Slippery surfaces ((~~shall~~)) must be cleaned and nonslip material shall be used if necessary.

REPEALER

The following section of the Washington Administrative Code is repealed:

WAC 296-56-60005 Definitions.

Chapter 296-806 WAC
MACHINE SAFETY

NEW SECTION

WAC 296-806-099 Definitions. Abrasive wheel. A grinding tool consisting of bonded abrasive grains. This includes diamond and reinforced wheels.

Adjustable barrier guard. A barrier guard with provisions for adjustment to accommodate various jobs or tooling set-ups.

Air-lift hammer. A type of gravity drop hammer in which the ram is raised for each stroke by an air cylinder. Because the length of stroke can be controlled, ram velocity, and therefore the energy delivered to the work piece, can be varied.

Antirepeat. A device that limits the machine to a single stroke if the activating means is held in the operative position.

Arbor. A rotating shaft used for mounting and transmitting torque to a cutting tool.

Authorized person. Someone the employer has given the authority and responsibility to perform a specific assignment.

Awareness barrier. A barrier device that allows more access to the hazard area, but still restricts access enough to warn of an approaching hazard.

Barricade. A barrier such as a guardrail, fence, or other framework designed to prevent employee access and exposure to a hazard.

Barrier guard. A barrier that provides a physical restriction from a hazard.

Belt conveyors. An endless belt of any material, operating over suitable pulleys to move materials placed on the belt.

Belt pole. A device used in shifting belts on and off fixed pulleys on line or countershaft where there are no loose pulleys. Belt poles are sometimes called "belt shippers" or "shipper poles."

Belt shifter. A device for mechanically shifting belts from tight to loose idler pulleys or vice versa, or for shifting belts on cones of speed pulleys.

Bench grinder. A bench mounted off-hand grinding machine with either one or two wheels mounted on a horizontal spindle.

Bending. The application of stress concentrated at specific points to permanently turn, press or force from a straight, level or flat condition to a curved or angular configuration.

Blade. A replaceable tool having one or more cutting edges for shearing, notching or coping.

Blanking. To bypass a portion of the sensing field of a presence-sensing device. The purpose is to allow objects such as tooling, feed stock, and work pieces to pass through the sensing field without sending a stop signal to the controlled machine. There are two blanking modes: Fixed and floating.

Blind hole. A hole drilled in an object, such as an abrasive wheel, that does not go all the way through the object.

Blotter. A compressible disc or washer, usually of blotting paper, plastic, cardboard, or gasket material, that is used between the wheel and the flanges to evenly distribute flange pressure on the wheel.

Board hammer. A type of gravity drop hammer where wood boards attached to the ram are raised vertically by action of contrarotating rolls, and then released. Energy for forging is obtained by the mass and velocity of the freely falling ram and the attached upper die.

Bolster plate. Plate attached to the press bed having holes, T-slots, or other means for attaching the lower die or die shoe.

Brake. Mechanism for stopping or preventing motion.

Chain conveyor. A conveyor in which one or more chains (including those with paddles or bars attached to them) move the conveyor. Specific examples of chain conveyors include drag, rolling, pusher bar, pusher chain and sliding chain conveyors.

Channel blanking. A feature that allows a safety light curtain system to be programmed to ignore objects. Also called "fixed blanking."

Chipper. A machine that cuts material into chips.

Chuck. A revolving clamp-like device used for holding and driving the work piece.

Clutch. A mechanism to couple the flywheel to the crankshaft. When engaged, it allows the driving force to be transmitted to the press slide.

Comb. See feather board.

Concurrent. Occurring at the same time.

Cone pulley. A pulley having two or more steps in a conical shape for driving machinery.

Cone and plug wheels (Types 16, 17, 18, 18R, and 19). Abrasive wheels manufactured with blind hole threaded bushings. They may be used on all surfaces except the flat mounting surface. Specific characteristics of the different cone and plug wheels are:

(a) Type 16 cones have a curved side with a nose radius.

(b) Type 17 cones have straight sides with or without a nose radius.

(c) Type 18 and 18R plug wheels are cylindrical in shape with either a square or curved grinding end.

(d) Type 19 cone wheels are a combination of cone and plug shapes.

Control system. Sensors, manual input and mode selection elements, interlocking and decision-making circuitry, and output elements of the press-operating devices and mechanisms.

Coping-notching. Where the edge or periphery of the work piece is sheared.

Counterbalance. Mechanism used to balance or support the weight of the connecting rods, slide, and slide attachments.

Cutting-off wheels. Abrasive wheels used to cut material such as masonry, pipe, etc.

Cutting tool or **saw blade.** A tool used on a metal sawing machine.

Cycle. The complete movement of the ram from its starting position and return to that same starting position.

Dado. A straight-sided groove, perpendicular to the face of the work piece, having a width greater than the thickness of a single saw blade.

Device. A control or attachment that is any of the following:

(a) Restrains the operator from inadvertently reaching into the hazardous area.

(b) Prevents normal or hazardous operation if any part of an individual's body is inadvertently within the hazardous area.

(c) Automatically withdraws the operator's hands, if the operator's hands are inadvertently within the hazardous area during the hazardous portion of the machine cycle.

(d) Maintains the operator or the operator's hands during the hazardous portion of the machine cycle at a safe distance from the hazardous area.

Die or **dies.** Tooling used in a press for shearing, punching, forming, drawing, or assembling metal or other material.

Die enclosure guard. Guard attached to the die shoe or stripper in a fixed position.

Die setter. A person who installs or removes dies from the press, and makes the necessary adjustments so the tooling functions properly and safely.

Die setting. Process of installing or removing dies, and adjusting the dies, other tooling and the safeguarding guards or devices.

Die shoe. Plate or block that a die holder is mounted on. It functions primarily as a base for the complete die assembly and, if used, is bolted or clamped to the bolster plate or the face of the slide.

Die shut height. Actual or design dimension between the mounting surfaces of a die.

Divider. A machine that mechanically divides the dough into pieces of predetermined volume or weight.

Dough sheeter. See **sheeter.**

Dressed. When material is removed from the cutting surfaces of an abrasive wheel to expose new sharp cutting surfaces.

Drilling/boring machine. A single or multiple spindle machine that uses a rotating cylindrical tool such as a drill, a counterboring tool, and similar tools to produce a hole, blind hole, counterbore, countersink, and similar cavities in work pieces. A work support means is provided to feed the tool into the work piece or the work piece into the tool.

Dross. Waste product or impurities formed on the surface of molten metal.

Dump bin and blender. That part of the flour handling system where the containers of flour are emptied.

Face of the slide. Surface of the slide to which the punch or upper die is generally attached.

Feather board/comb. A work-guiding and hold-down device consisting of stock with a series of spring-like fingers along the edge, set and positioned at an angle to the work piece.

Feeding. Placing material in or removing it from the point of operation.

Fence. A device used to locate and guide a work piece relative to the cutting tool.

Fixed barricade. A guard attached to a fixed surface used to enclose a hazardous area and prevent employees from placing any part of their body into the point of operation.

Fixed barrier guard. A guard attached to the frame, bolster, or other surface to enclose all or part of the point of operation or other hazard area.

Fixed blade. A stationary blade having one or more cutting edges.

Fixed blanking. A feature that allows a safety light curtain system to be programmed to ignore objects. Also called "channel blanking."

Fixture/jig. A device used to locate, hold, or clamp one or more work pieces in a desired position.

Flanges. Collars, discs, or plates between or against which wheels are mounted. There are four types of flanges:

(a) Adaptor.

(b) Sleeve.

(c) Straight relieved.

(d) Straight unrelieved.

Floating blanking (floating window). A feature that allows a safety light curtain system to be programmed to ignore the interruption of one or two beams within the light curtain. This allows the feeding of an object through the defined area at any point along the length of the curtain without causing it to produce a stop signal.

Floorstand grinder. A floor mounted, off-hand grinding machine with one or two wheels mounted on a horizontal spindle. The wheels are normally twenty-four inches or thirty inches in diameter and used for snagging operations.

Forging. Metal formed to a desired shape by impact or pressure in hammers, forging machines (upsetters), presses, rolls, and related forming equipment.

(a) Forging hammers, counterblow equipment, and high-energy-rate forging machines impart impact to the work piece, while most other types of forging equipment impart squeeze pressure in shaping the stock.

(b) Some metals can be forged at room temperature, but the majority of metals are made more plastic for forging with heat.

(c) Forged or drop forged parts are much stronger than poured or cast parts from foundries.

Forging presses. A class of forging equipment where the shaping of metal between dies is performed by mechanical or hydraulic pressure and usually is accomplished with a single workstroke of the press for each die station.

Full revolution clutch. Type of clutch that, when engaged, cannot be disengaged until the press has completed a single cycle (stroke).

Gage. See **miter gage.**

Gap (throat). An opening or recess in the frame of the machine to permit positioning of material or work pieces.

Gate or movable barrier device. Safeguarding device that encloses the point of operation before press motion can be initiated.

Guard. A barrier that does at least one of the following:

(a) Prevents the hands or other body part from reaching through, over, under, or around the guard into the hazard area.

(b) Prevents objects or debris from falling onto or being ejected towards an employee.

Guard (abrasive wheels). An enclosure designed to restrain the pieces of an abrasive wheel and furnish protection to the operator if the wheel is broken during operation.

Guidepost. The pin attached to the upper or lower die shoe. It operates within the bushing on the opposing die shoe to maintain the alignment of the upper and lower dies.

Hazard. A condition that could cause physical harm to a person.

Hazard area. An area or space that poses an immediate or impending physical hazard.

Hog. A machine used for cutting or grinding slabs and other coarse residue from the mill.

Horizontal lathe. A turning machine in which the work piece revolves about a horizontal axis. While the work is revolving, it is being shaped by cutting tools working either parallel to the axis of the work or at an angle to the axis of the work.

Idler (pulley). A pulley or roller on a shaft that presses against or rests on a drive belt to guide it or take up slack.

Inch. Die setting mode that engages the driving clutch so a small portion of one cycle (stroke) occurs, depending upon the length of time the operator control is held actuated.

Indirect recirculating ovens. Ovens that are equipped with a gas-tight duct system, a furnace, and a circulating fan.

(a) Combustion gases are circulated through this enclosed system and mixed with fresh combustion gases generated by the burner in the combustion chamber.

(b) A vent or overflow removes a portion of the gases to make room for the fresh gases added by the burner.

(c) No unburned gases or products of combustion enter the baking chamber.

Interlocked barrier guard. Barrier attached to the press frame and interlocked with the press control system so the press stroke cannot be started normally unless the guard, or its hinged or movable sections, enclose the point of operation.

Inverted swing and jump saws. Saws with a saw blade starting position below the table, where the blade must travel through the horizontal plane of the tabletop to make the cut on the stock.

Ironworker. A machine with multiple workstations at which various operations may be performed singly or simultaneously, including but not limited to:

(a) Punching;
(b) Shearing;
(c) Notching;
(d) Coping; and
(e) Forming.

Jig. See fixture.

Jog. Die setting mode where intermittent motion is imparted to the slide by momentary operation of the drive motor after the flywheel is at rest and the clutch is engaged.

Jointer. A machine that has a cylindrical cutter head with more than one knife or cutting edge. It has an adjustable in-feed means of work support, or an adjustable cutter head or knives, as well as a fence or other work piece guide.

Jump saw. A machine that utilizes a means of work support and hold down, and has a powered arbor on an arm that pivots about a point located behind the saw arbor at approximately the same height. At rest position the saw blade is below the work piece. See **inverted swing and jump saws.**

Kerf. The slot made by a saw blade as it saws through a work piece.

Kickback. The uncontrolled propulsion or self-feed type action of a work piece in the direction of the rotation or travel of the working portion of the saw, cutting tool, sanding belt, or sanding head.

Live roller conveyor. A series of rollers with objects moving over them through power to all or some of the rollers. The power is usually transmitted by a belt or chain.

Mandrel. Tooling or a machine component used to provide internal support. It can be a spindle or shaft on which a tool is mounted, such as a drill bit.

Manlift. A device consisting of a power-driven endless belt moving in one direction only, and provided with steps or platforms and handholds attached to it for the transportation of personnel from floor to floor.

Manual feeding. The operator puts material or the part being processed into the press for each cycle (stroke).

Maximum exposure angle. The largest part of a wheel that does not need to be covered by a safety guard.

Miter gage. A device used as a work piece pusher, guided by a table groove.

Miter saw. A cutoff saw with a means of work support. It utilizes a powered arbor on an arm that pivots about a point located behind the saw arbor at approximately the same height. The saw arbor may also slide vertically. In the at-rest position, the saw blade is above the maximum capacity work piece.

Mode. The state or condition of the control system that allows specific operations of the machine.

Modified Types 6 and 11 wheels (terrazzo). Similar to Type 6 "straight cup" wheels and Type 11 "flaring cup" wheels except for the bottom of the cup. The bottom of the cup is flat in Type 6 and 11 wheels. The modified wheels have bottoms that are sloped downwards towards the mounting hole. These modified wheels need to be mounted using a special tapered flange furnished by the tool manufacturer. These wheels are used in the terrazzo trade.

Molding machine. A machine that uses more than one arbor-mounted cylindrical, rotating cutting tool. It also uses power feeding, where once a work piece is engaged, it carries the work piece linearly through the balance of the intended operations, without further operator action. Operations can be performed on all surfaces of a work piece. Work pieces can be hopper- or hand-loaded and are fed ribbon-style into the machine.

Mortiser. A machine designed to produce a square or rectangular cavity through use of a moving, forming, or reciprocating tool. Means are provided to clamp and support the stock, and either move the stock into the tool or the tool into the stock.

Moulder. A machine in which the dough pieces are shaped and formed prior to final proofing.

Mounted wheels. Bonded abrasive wheels of various shapes, usually two inches diameter or smaller, that are secured to plain or threaded steel shafts or mandrels.

Movable barrier device. See **gate or movable barrier device.**

Nip-point belt and pulley guard. A guard that encloses the pulley and has rounded or rolled edge slots for the belt to pass through.

Off-hand grinding. Grinding of a work piece that is held in the operator's hand.

Overland conveyor. A single or series of belt conveyors designed to carry bulk material long distances, usually following the general contour of the land.

Part revolution clutch. Type of clutch that can be disengaged before the press slide completes a full stroke.

Pedestal grinder. An off-hand grinding machine similar to a bench grinder mounted on or otherwise attached to a floor-mounted pedestal.

Pinch point. Any point, other than the point of operation, where it is possible for a part of the body to be caught between moving parts or between a moving part and stationary one.

Planer. A machine with at least one cylindrical cutter head, that includes one or more inserted knife or cutting edge. A planer has a cutter head mounted over a means of work support. It also uses either an adjustable work support or cutter head to size the stock. The work piece is usually power-fed.

Point of operation. The area on a machine where work is actually performed upon the material being processed.

Power-driven hammers. Types of drop hammers in which the ram is raised for each stroke by a double-action steam, air, or hydraulic cylinder, and the energy delivered to the work piece is supplied by the velocity and weight of the ram and attached upper die driven downward by steam, air, or hydraulic pressure. Energy delivered during each stroke may be varied.

Power transmission parts. The mechanical components of a piece of equipment that, together with a source of power (sometimes referred to as a prime mover), provide the motion to a part of a machine or piece of equipment.

Presence-sensing device. A device that creates a sensing field, area, or plane to detect the presence of an individual or object.

Presence-sensing device initiation (PSDI). Operating mode of a mechanical power press where a single cycle (stroke) is initiated by a presence-sensing device when it senses that the operator has finished feeding or removing parts and all parts of the operator's body are withdrawn from the sensing field of the device.

Pull-back device. A device attached to the operator's hands and connected to the upper die or slide of the press that will pull the operator's hands out of the point of operation as the dies close.

Push block. A nonmetallic device with one or more handles. A push block also has a flat bottom surface with either a heel or friction material on it, used as a hold-down and feed device. The purpose of this is to provide a safe distance between the hands and the cutting tool.

Pusher-bar conveyor. Two endless chains cross-connected at intervals by bars or pushers that propel the load along the bed or trough.

Push stick. A nonmetallic stick shaped device designed to provide a safe distance between the hands and the cutting tool. It has, as part of its design, a notched end with a heel and toe to hold down and feed the work piece past the cutting tool.

Racks. Carriers of pans, panned dough and bakery products. They are usually constructed of metal and mounted on casters or provided with trolleys for use on a monorail system.

Reinforced wheels. Organic bonded abrasive wheels which have webbing, fabric or filament to provide resistance to complete breaking of the wheel should it become cracked or damaged.

Repeat. An unintended or unexpected successive stroke of the press resulting from a malfunction.

Restraint device. A device with attachments for the operator's hands and wrists that prevent the operator from reaching into the hazardous area.

Return-belt idlers. A roller that supports the return run of the conveyor belt.

Ripping. A sawing operation made through the thickness of the work piece with the grain of natural wood, along the long dimension of a rectangular work piece, and usually parallel to that edge on reconstituted wood products. Two or more pieces result from the operation.

Rivet-making machines. The same as upsetters and bolt-headers when producing rivets with stock diameter of one inch or more.

Riving knife. See **spreader.**

Safeguarding by distance. Employees are kept far enough from a hazard that they will not contact or be injured by the hazard.

Safeguarding by location. Because of its location, no employee can inadvertently come in contact with a hazard during operation, maintenance, or servicing.

Safeguarding device. See **device.**

Safety block. A prop inserted between the upper and lower dies or between the bolster plate and the face of the slide to prevent the slide from falling of its own weight.

Safety cylinder. This safety device may be of the direct cushion type integral with the main cylinder or it may be of the separate cushion type whereby a constant supply of live steam or air is applied behind a separate piston adjacent to the main cylinder. A spring, suitably constrained, may also be employed.

Safety cylinder head. An air cushion at the top of the hammer, just below the head, to protect the head from damage by the piston.

Scale. Any layer or leaf of metal resembling the scale of a fish in size and thinness; such as a scale of iron.

Screw conveyor. A screw or auger that revolves in a suitably shaped trough or casing, used to move material in one specific direction.

SFPM. See **surface feet per minute.**

Shaper. A machine that uses one or more vertical spindles that are either fixed or able to be tilted, usually with an arbor mounted rotating cylindrical cutter, to form decorative or functional forms on a manually or power-fed work piece. The work piece is supported on a stationary or moving table. A guide, fixture, or template is used to control the operation. The spindle can be mounted above or below the work support means.

Sheeter. A machine that forms dough into a sheet by compression through one or more sets of driven rolls.

Sifter. A device that sifts flour. Sifter types are brush, oscillating, or vibrating.

Single stroke mechanism. Used on a full revolution clutch to limit the travel of the slide to one complete stroke at each engagement of the clutch.

Slat and roller slat conveyor. A conveyor employing one or more endless chains to which nonoverlapping, noninterlocking, spaced slats are attached.

Slide. Part of the press that moves back and forth in a straight line. Also called a ram, plunger, or platen.

Snagging. Grinding which removes relatively large amounts of material without regard to close tolerances or surface finish.

Spreader. A flat metal device slightly narrower than the saw kerf. It is designed to prevent the saw blade kerf in the work piece from closing on the sides of the blade during a sawing operation.

Steam hammers. A type of drop hammer where the ram is raised for each stroke by a double-action steam cylinder and the energy delivered to the work piece is supplied by the velocity and weight of the ram and attached upper die driven downward by steam pressure. Energy delivered during each stroke may be varied.

Stripper. A mechanism or die part for removing parts or material from the punch.

Surface feet per minute (SFPM). A measure of the speed of a point on the periphery (outer edge) of an abrasive wheel. It is calculated using the formula:

SFPM = .262 x diameter of the wheel (in inches) x RPM (revolutions per minute)

Example:

Wheel diameter = 24 inches

Spindle speed = 1000 RPM
SFPM = .262 x 24 x 1000 = 3,144 SFPM

Sweep device. A single or double arm (rod) attached to the upper die or slide of the press that is designed to move the operator's hands to a safe position as the dies close. Sweep devices are not allowed for point-of-operation safeguarding.

Swing saw/overhead swing cutoff saw. A machine with a means of work support using a powered arbor and circular saw blade that pivots about a point located above the saw arbor.

Tenoning machine. A machine designed to use two or more cylindrical cutters, or one or two circular saws, to size or prepare (or both) the ends of a work piece. The work piece is supported on a table or conveying means. A means for clamping the work piece is provided.

Terrazzo. A material of stone chips, such as marble, set in mortar and polished.

Threaded hole wheels. Abrasive wheels that have one central threaded bushing, securely anchored in place. They are mounted by being screwed onto a threaded machine spindle so that the wheel back seats firmly against an unrelieved flat back flange.

Tongs. Metal holder used to handle hot or cold forgings.

Tongue guard. An integral part of a safety guard that is located where the upper exposed part of the abrasive wheel meets the safety guard. It can be adjusted as necessary to maintain a set distance from the constantly decreasing diameter of the wheel.

Tooling. Elements for guiding or imparting a desired configuration to the material.

Top grinding. Grinding done above the horizontal centerline of the wheel.

Towed conveyor. An endless chain supported by trolleys from an overhead track or running in a track on the floor with means for towing floor-supported trucks, dollies, or carts.

Trimming presses. A class of auxiliary forging equipment that removes flash (metal splash) or excess metal from a forging. This trimming operation can also be done cold, as in can coining, a product-sizing operation.

Trip (or tripping). Momentary actuation of the activating control to initiate the cycle (stroke).

Trued. When the cutting surfaces of an abrasive wheel have been reshaped to expose new sharp cutting surfaces.

Turnover bar. A bar used in die setting to manually turn the crankshaft of the press.

Two-hand device. A device that requires the concurrent use of both of the operator's hands to both initiate and continue the machine cycle during the hazardous portion of the machine cycle.

Two-hand trip device. A device that requires concurrent operation of the trip controls or levers by the operator's hands to initiate the machine cycle.

Type A movable gate. A device that encloses the hazardous area when the machine cycles and does not open until the end of the cycle.

Type B movable gate. A device that encloses the hazardous area when the machine cycles and opens when hazardous motion of the cycle is over. Type B devices are not allowed on full revolution type machinery.

Type 1 wheel. An abrasive wheel shaped like a disc with a mounting hole in the middle. Sometimes called a "straight wheel." It has diameter (D), thickness (T), and hole size (H) dimensions. Grinding is

normally done on the periphery (outside curve) of the wheel (T dimension). Can be used for grinding, cutting-off, and tuck pointing.

Type 2 wheel. An abrasive wheel shaped like an open-ended, hollow cylinder. Sometimes called a cylinder wheel. It has diameter (measured from the outer wall of the cylinder), wheel thickness (height of the cylinder), and rim thickness (thickness of the cylinder wall). Grinding is done on the end of the cylinder (rim thickness dimension).

Type 6 wheel. An abrasive wheel shaped like a straight-sided cup or bowl with a mounting hole in the bottom of the cup. Sometimes called a "cup wheel." It has diameter (D), thickness (T), hole size (H), rim thickness (W), and back thickness (E) dimensions. Grinding is normally done on the cup rim (W dimension).

Type 11 wheel. An abrasive wheel shaped like a cup or bowl with a mounting hole in the bottom of the cup. The sides of the cup are not straight-sided but are angled outward. Sometimes called a "flaring cup wheel" since the sides are "flared" out. It has double diameter dimensions (top D and bottom J). It also has thickness (T), hole size (H), rim thickness (W) and back thickness (E) dimensions. Grinding is normally done on the cup rim (W dimension).

Type 16, 17, 18, 18R, and 19 wheels. See cone and plug wheels.

Type 27 wheel. An abrasive wheel similar to a Type 1 wheel, but the center of the wheel around the mounting hole is pushed back (depressed). Sometimes called a "depressed center" wheel. It has diameter (D), thickness (U) and hole size (H) dimensions. The depressed center allows grinding on the flat surface of the wheel without interference from the flange or mounting hardware.

Type 27A cutting-off wheel. Similar to a Type 27 wheel. Specifically designed for use on cutting-off machines.

Type 28 wheel. An abrasive wheel similar to a Type 27 wheel, but the face of the wheel is angled upward and away from the mounting hole. The face of a Type 27 wheel is flat and perpendicular to the mounting hole. A Type 28 wheel is also called a "depressed center" wheel. It has diameter (D), thickness (U) and hole size (H) dimensions. The depressed center allows grinding without interference from the mounting. A Type 28 wheel has a saucer-shaped grinding rim and is designed for corner grinding and side grinding.

Type 29 wheel. An abrasive wheel that has reversed, saucer-shaped grinding rims (similar to a partially opened umbrella).

Unitized tooling. A die that has the upper and lower members incorporated into a self-contained unit that holds the die members in alignment.

Upsetters (or forging machines, or headers). A type of forging equipment, related to the mechanical press, in which the main forming energy is applied horizontally to the work piece that is gripped and held by prior action of the dies.

Wood products. Wood products include wood and reconstituted wood products that generate chips or dust in the processing of a wood piece.

((~~REQUIREMENTS FOR ALL MACHINES~~))

AMENDATORY SECTION (Amending WSR 04-14-028, filed 6/29/04, effective 1/1/05)

WAC 296-806-200 ((~~Summary.~~)) Requirements for all machines. Summary

This section applies to all machines in your workplace. It is organized into the following four categories:

((~~•~~)) (1) General requirements.
((~~•~~)) (2) Safeguarding requirements.
((~~•~~)) (3) Safeguarding methods.
((~~•~~)) (4) Requirements for specific machine hazards.

Reference: ((~~•~~)) In addition to the requirements in this section, you need to refer to the following sections of this chapter in order to determine if additional requirements are listed for machines or operations in your workplace:
((–)) 1. Additional requirements for some machines and machine operations, WAC 296-806-400.
((~~•~~)) 2. For requirements that apply to hand-held tools, see Portable power tools, chapter 296-807 WAC.

Your responsibility:

To protect employees from machine hazards in your workplace.

((~~**You must:**~~))

GENERAL REQUIREMENTS

WORKPLACE

((~~Secure machines designed to stay in one place~~
~~WAC 296-806-20002.~~
~~Protect employees from slipping hazards around machinery~~
~~WAC 296-806-20004.~~
~~Arrange work areas to avoid creating hazards~~
~~WAC 296-806-20006.~~

~~**MACHINE CONTROLS AND OPERATION**~~

~~Make sure operating controls meet these requirements~~
~~WAC 296-806-20008.~~
~~Protect employees from unintentional machine operation~~
~~WAC 296-806-20010.~~
~~Make sure emergency stop controls meet these requirements~~
~~WAC 296-806-20012.~~
~~Control machine vibration~~
~~WAC 296-806-20014.~~
~~Prevent overspeed conditions~~
~~WAC 296-806-20016.~~
~~Make sure hand feeding and retrieval tools meet these requirements~~
~~WAC 296-806-20018.~~
~~Protect employees who are adjusting or repairing machinery~~
~~WAC 296-806-20020.~~

~~**POWER TRANSMISSION PARTS**~~

~~Keep power transmission parts in good working condition~~
~~WAC 296-806-20022.~~
~~Inspect power transmission parts~~
~~WAC 296-806-20024.~~
~~Protect employees lubricating moving machinery~~

~~WAC 296-806-20026.~~

~~SAFEGUARDING REQUIREMENTS~~

~~SAFEGUARD MACHINERY~~

~~Safeguard employees from the point of operation~~

~~WAC 296-806-20028.~~

~~Safeguard employees from nip or shear point hazards~~

~~WAC 296-806-20030.~~

~~Safeguard employees from rotating or revolving parts~~

~~WAC 296-806-20032.~~

~~Safeguard employees from reciprocating or other moving parts~~

~~WAC 296-806-20034.~~

~~Safeguard employees from flying objects~~

~~WAC 296-806-20036.~~

~~Safeguard employees from falling objects~~

~~WAC 296-806-20038.~~

~~Safeguard employees from hazards created by moving surfaces with hazards such as sharp edges, burrs, and protruding nails and bolts~~

~~WAC 296-806-20040.~~

~~SAFEGUARDING METHODS~~

~~**Guards**~~

~~Make sure guards meet these requirements~~

~~WAC 296-806-20042.~~

~~**Devices**~~

~~Make sure devices meet these requirements~~

~~WAC 296-806-20044.~~

~~Make sure light curtains meet these requirements~~

~~WAC 296-806-20046.~~

~~Make sure pressure-sensitive mats meet these requirements~~

~~WAC 296-806-20048.~~

~~Make sure restraint or pullback devices meet these requirements~~

~~WAC 296-806-20050.~~

~~Make sure two-hand devices meet these requirements~~

~~WAC 296-806-20052.~~

~~Make sure devices used with barrier guards meet these requirements~~

~~WAC 296-806-20054.~~

~~**Distance**~~

~~Make sure safeguarding by distance meets these requirements~~

~~WAC 296-806-20056.~~

~~Make sure guardrails used for safeguarding meet these requirements~~

~~WAC 296-806-20058.~~

~~REQUIREMENTS FOR SPECIFIC MACHINE HAZARDS~~

~~Fit arbors and mandrels to the machine~~

~~WAC 296-806-30002.~~

~~Safeguard belt and rope drives~~

~~WAC 296-806-30004.~~

~~Make sure belt or rope drives meet these requirements~~

~~WAC 296-806-30006.~~

~~Protect employees while shifting belts on belt and pulley drives~~

~~WAC 296-806-30008.~~

~~Make sure belt tighteners meet these requirements~~

~~WAC 296-806-30010.~~

~~Safeguard cams, connecting rods, tail rods, and extension piston rods~~

~~WAC 296-806-30012.~~

~~Safeguard chain and sprocket drives~~

~~WAC 296-806-30014.~~
~~Safeguard fan blades~~
~~WAC 296-806-30016.~~
~~Safeguard flywheels~~
~~WAC 296-806-30018.~~
~~Safeguard gears~~
~~WAC 296-806-30020.~~
~~Safeguard projections on moving parts~~
~~WAC 296-806-30022.~~
~~Safeguard pulleys~~
~~WAC 296-806-30024.~~
~~Make sure pulleys meet these requirements~~
~~WAC 296-806-30026.~~
~~Safeguard revolving drums, barrels, and containers~~
~~WAC 296-806-30028.~~
~~Safeguard shafting~~
~~WAC 296-806-30030.~~
~~Make sure shafting meets these requirements~~
~~WAC 296-806-30032.~~
~~Safeguard unused keyways~~
~~WAC 296-806-30034.~~
~~Make sure revolving collars meet these requirements~~
~~WAC 296-806-30036.~~
~~Safeguard counterweights~~
~~WAC 296-806-30038.~~))

You must meet the requirements...	**in this section:**
Secure machines designed to stay in one place	WAC 296-806-20002
Protect employees from slipping hazards around machinery	WAC 296-806-20004
Arrange work areas to avoid creating hazards	WAC 296-806-20006

((~~WORKPLACE~~))

AMENDATORY SECTION (Amending WSR 04-14-028, filed 6/29/04, effective 1/1/05)

WAC 296-806-20002 Secure machines designed to stay in one place. ((~~**You must:**~~

~~•~~)) You must make sure machines designed to stay in one place are secured so they will not move or change position during use.

((~~Exemption:~~)) **EXEMPTION:** Machines that have either rubber feet or foot pads made of nonskid (high coefficient of friction) or similar vibration dampening materials do not have to be secured as long as the machine will not tip, fall over, or walk (move).

AMENDATORY SECTION (Amending WSR 04-14-028, filed 6/29/04, effective 1/1/05)

WAC 296-806-20004 Protect employees from slipping hazards around machinery. ((~~You must:~~

~~•~~)) You must make sure employees working around dangerous machines are protected from slipping on smooth, oily, or otherwise slippery floors by providing one of the following types of floor covering:

((–)) (1) Nonslip matting.

((–)) (2) Grating.

((–)) (3) Nonslip composition flooring.

((–)) (4) Some other effective floor treatment.

Reference: For additional requirements about housekeeping, personal protective equipment (PPE), and work practices, see the Safety and health core rules, chapter 296-800 WAC.

AMENDATORY SECTION (Amending WSR 04-14-028, filed 6/29/04, effective 1/1/05)

WAC 296-806-20006 Arrange work areas to avoid creating hazards. ((~~You must:~~

~~•~~)) (1) You must make sure work areas around machinery are designed with enough space so each operator:

((–)) (a) Can clean and handle material without interference from other workers or machines.

((–)) (b) Does **not** have to stand in the way of passing traffic.

((~~•~~)) (2) You must provide enough space so employees can bring in and remove materials safely.

Reference: For requirements that apply to Aisles and passageways, see WAC 296-24-73505.

((~~MACHINE CONTROLS AND OPERATIONS~~))

NEW SECTION

WAC 296-806-20007 Machine controls and operations.

You must meet the requirements…	in this section:
Make sure operating controls meet these requirements	WAC 296-806-20008
Protect employees from unintentional machine operation	WAC 296-806-20010

You must meet the requirements…	in this section:
Make sure emergency stop controls meet these requirements	WAC 296-806-20012
Control machine vibration	WAC 296-806-20014
Prevent overspeed conditions	WAC 296-806-20016
Make sure hand feeding and retrieval tools meet these requirements	WAC 296-806-20018
Protect employees who are adjusting or repairing machinery	WAC 296-806-20020

AMENDATORY SECTION (Amending WSR 04-14-028, filed 6/29/04, effective 1/1/05)

WAC 296-806-20008 Make sure operating controls meet these requirements.

((~~**Exemption:**~~)) **EXEMPTION:** This rule does not apply to constant pressure controls used only for setup.

((~~**You must:**~~))

(1) You must make sure each machine has a control that both:

((~~•~~)) (a) Stops the machine; ((~~**AND**~~

~~•~~)) and

(b) Can be reached by the operator without leaving the operator's position.

(2) You must make sure the operator can easily reach all machine controls without reaching into a hazard area of the machine.

AMENDATORY SECTION (Amending WSR 04-14-028, filed 6/29/04, effective 1/1/05)

WAC 296-806-20010 Protect employees from unintentional machine operation. ((~~**You must:**~~))

(1) You must make sure foot-operated controls are located or guarded so that unintentional movement to the "ON" position is unlikely.

(2) You must make sure machines will **not** automatically restart when power is restored after a power failure, if restarting would create a hazard for employees.

Note: Operating controls can be protected from unintentional movement by methods such as covers on foot treadles and collars around machinery start buttons.

AMENDATORY SECTION (Amending WSR 04-14-028, filed 6/29/04, effective 1/1/05)

WAC 296-806-20012 Make sure emergency stop controls meet these requirements. ((~~You must:~~

~~•~~)) You must make sure emergency stop controls, if required, meet **all** the following:

((~~–~~)) (1) Are red in color.

((~~–~~)) (2) Are easily reached from the operator's normal work position.

((~~–~~)) (3) Are kept in a good working condition.

((~~–~~)) (4) Have to be manually reset before a machine can be restarted.

AMENDATORY SECTION (Amending WSR 04-14-028, filed 6/29/04, effective 1/1/05)

WAC 296-806-20014 Control machine vibration. ((~~You must:~~

~~•~~)) You must prevent excessive machine vibration that could create a hazard to employees.

AMENDATORY SECTION (Amending WSR 04-14-028, filed 6/29/04, effective 1/1/05)

WAC 296-806-20016 Prevent overspeed conditions. ((~~You must:~~

~~•~~)) You must operate tools and equipment within their rated speed.

Note: Actions that could cause an overspeed condition include:
((~~•~~)) 1. Installing a more powerful motor.
((~~•~~)) 2. Changing or increasing the power source.
((~~•~~)) 3. Changing attachment size or type, such as a blade or wheel.
((~~–~~)) The attachment speed (rpm) and motor speed (rpm) should match.

AMENDATORY SECTION (Amending WSR 04-14-028, filed 6/29/04, effective 1/1/05)

WAC 296-806-20018 Make sure hand feeding and retrieval tools meet these requirements. ((~~You must:~~

~~•~~)) You must make sure hand feeding and retrieval tools:

((~~–~~)) (1) Are suitable for the work to be done.

((~~–~~)) (2) Do not create a hazard when used.

((~~–~~)) (3) Are of a size and shape that will keep the operator's hands outside the hazardous area.

((~~–~~)) (4) Are constructed so they will not shatter if they come in contact with the machine tool or tooling.

Note: Hand feeding and retrieval tools, such as push sticks or push blocks, can **not** be used instead of required safeguarding, unless a specific machine requirement allows it.

AMENDATORY SECTION (Amending WSR 04-14-028, filed 6/29/04, effective 1/1/05)

WAC 296-806-20020 Protect employees who are adjusting or repairing machinery.

((~~Exemption:~~)) This rule does not apply if the machine has to be in motion to properly adjust it.
EXEMPTION:

((~~You must:~~

~~•~~)) You must make sure power-driven machinery is completely stopped before **either:**

((~~–~~)) (1) Making adjustments or repairs; ((~~OR~~

~~–~~)) or

(2) Removing material or refuse from the machine.

Reference: For requirements about maintaining and servicing machinery where the unexpected start-up, energization, or release of stored energy could injure an employee are in Lockout/tagout (control of hazardous energy), chapter 296-803 WAC.

((~~POWER TRANSMISSION PARTS~~))

NEW SECTION

WAC 296-806-20021 Power transmission parts.

You must meet the requirements…	in this section:
Keep power transmission equipment in good working condition	WAC 296-806-20022
Inspect power transmission parts	WAC 296-806-20024
Protect employees lubricating moving machinery	WAC 296-806-20026

AMENDATORY SECTION (Amending WSR 04-14-028, filed 6/29/04, effective 1/1/05)

WAC 296-806-20022 Keep power transmission equipment in good working condition. ((~~Definition:~~

~~A power transmission part is a mechanical component of a system that provides motion to a part of a machine or piece of equipment.~~

~~You must:~~

~~•~~)) (1) You must make sure power transmission parts are kept in good working condition at **all** times.

((~~•~~)) (2) You must keep bearings free from lost motion and well lubricated.

AMENDATORY SECTION (Amending WSR 04-14-028, filed 6/29/04, effective 1/1/05)

WAC 296-806-20024 Inspect power transmission parts. ((~~You must:~~ ~~•~~)) You must inspect power transmission parts **at least** once every sixty days to make sure that all:

((~~–~~)) (1) Safeguarding meets the requirements of this chapter.

((~~–~~)) (2) Parts are in proper alignment.

((~~–~~)) (3) Bolts and screws that hold power transmission parts together or support the system are tight.

AMENDATORY SECTION (Amending WSR 04-14-028, filed 6/29/04, effective 1/1/05)

WAC 296-806-20026 Protect employees lubricating moving machinery. ((~~You must:~~))

(1) You must protect employees who lubricate moving machinery by:

((~~•~~)) (a) Providing tools, such as oil cans or grease guns, that have spouts or necks that are long enough to keep the employees' hands out of hazardous areas.

((~~•~~)) (b) Requiring employees to wear closely fitted clothing.

Note: Things such as clothing, hair, and jewelry can get caught in machinery and be a hazard on the job.

((~~You must:~~))

(2) You must make sure drip cups and pans are securely fastened to the machinery.

((~~SAFEGUARDING REQUIREMENTS~~))

NEW SECTION

WAC 296-806-20027 Safeguarding requirements.

You must meet the requirements…	**in this section:**
Safeguard employees from the point of operation	WAC 296-806-20028
Safeguard employees from nip or shear point hazards	WAC 296-806-20030
Safeguard employees from rotating or revolving parts	WAC 296-806-20032
Safeguard employees from reciprocating or other moving parts	WAC 296-806-20034

You must meet the requirements…	in this section:
Safeguard employees from flying objects	WAC 296-806-20036
Safeguard employees from falling objects	WAC 296-806-20038
Safeguard employees from moving surfaces with hazards	WAC 296-806-20040

AMENDATORY SECTION (Amending WSR 04-14-028, filed 6/29/04, effective 1/1/05)

WAC 296-806-20028 Safeguard employees from the point of operation.

((~~IMPORTANT:~~)) **Important:**

If a specific safeguarding method in this chapter is required for machinery or machine parts found in your workplace, follow the specific requirement.

In the absence of a specific safeguarding method required by this or some other chapter, you need to choose a method or combination of methods from the safeguarding requirements found in Safeguarding methods, WAC 296-806-20042 through 296-806-20058. Examples of safeguarding methods include:

((~~•~~)) 1. Guards.

((~~•~~)) 2. Devices.

((~~•~~)) 3. Safeguarding by distance.

((~~•~~)) 4. Safeguarding by location.

((~~**You must:**~~

~~•~~)) You must protect employees from hazards created by the point of operation by using one or more safeguarding methods.

AMENDATORY SECTION (Amending WSR 04-14-028, filed 6/29/04, effective 1/1/05)

WAC 296-806-20030 Safeguard employees from nip or shear point hazards. ((~~**You must:**~~

~~•~~)) You must protect employees from hazards created by nip or shear points by using one or more safeguarding methods.

AMENDATORY SECTION (Amending WSR 04-14-028, filed 6/29/04, effective 1/1/05)

WAC 296-806-20032 Safeguard employees from rotating or revolving parts. ((~~**You must:**~~

~~•~~)) You must protect employees from hazards created by rotating or revolving parts by using one or more safeguarding methods.

AMENDATORY SECTION (Amending WSR 04-14-028, filed 6/29/04, effective 1/1/05)

WAC 296-806-20034 Safeguard employees from reciprocating or other moving parts. ((~~You must:~~

~~•~~)) You must protect employees from hazards created by reciprocating or other moving parts by using one or more safeguarding methods.

AMENDATORY SECTION (Amending WSR 04-14-028, filed 6/29/04, effective 1/1/05)

WAC 296-806-20036 Safeguard employees from flying objects. ((~~You must:~~

~~•~~)) You must protect employees from hazards created by flying objects, including chips, sparks, and fluids by using one or more safeguarding methods.

AMENDATORY SECTION (Amending WSR 04-14-028, filed 6/29/04, effective 1/1/05)

WAC 296-806-20038 Safeguard employees from falling objects. ((~~You must:~~

~~•~~)) You must protect employees from hazards created by falling objects by using one or more safeguarding methods.

AMENDATORY SECTION (Amending WSR 04-14-028, filed 6/29/04, effective 1/1/05)

WAC 296-806-20040 Safeguard employees from moving surfaces with hazards. ((~~You must:~~

~~•~~)) You must safeguard employees from hazards created by moving surfaces with hazards such as sharp edges, burrs, and protruding nails and bolts.

((~~SAFEGUARDING METHODS~~
~~Guards~~))

NEW SECTION

WAC 296-806-20041 Safeguarding methods. Guards

You must meet the requirements…	in this section:
Make sure guards meet these requirements	WAC 296-806-20042

AMENDATORY SECTION (Amending WSR 04-14-028, filed 6/29/04, effective 1/1/05)

WAC 296-806-20042 Make sure guards meet these requirements. ((~~You must:~~

~~•~~)) (1) You must make sure guards do **not** create additional hazards such as sharp edges or pinch points between the guard and moving machine parts.

((~~•~~)) (2) You must make sure guards are:

((–)) (a) Made of durable materials.

((–)) (b) Strong enough to withstand the forces to which they are exposed.

((–)) (c) Securely fastened to the machine, if possible, or to the building structure if they cannot be attached to the machine.

((~~•~~)) (3) You must make sure guards protect employees by doing **both** of the following:

((–)) (a) Preventing hands or other body parts from reaching through, over, under, or around the guard into the hazard area; ((~~AND~~

–)) and

(b) Preventing objects or debris from falling onto or being thrown towards an employee.

((~~•~~)) (4) You must make sure barrier guards:

((–)) (a) Are properly installed, adjusted, and maintained.

((–)) (b) Have no opening at any point larger than shown in Table 200-1, Largest Allowable Guard Opening.

Reference: Metal cutting shears are allowed to be guarded with properly applied awareness barrier safeguarding as described in ANSI B11.4-1993, Sections 6.3.3.

Table 200-1
Largest Allowable Guard Opening (inches)

If the distance (A) from hazard to the guard is:	Then the opening (B) in the guard or between the table and the guard can NOT be greater than:
1/2 to 1 1/2	1/4
1 1/2 to 2 1/2	3/8
2 1/2 to 3 1/2	1/2
3 1/2 to 5 1/2	5/8
5 1/2 to 6 1/2	3/4
6 1/2 to 7 1/2	7/8
7 1/2 to 12 1/2	1 1/4
12 1/2 to 15 1/2	1 1/2

If the distance (A) from hazard to the guard is:	Then the opening (B) in the guard or between the table and the guard can NOT be greater than:
15 1/2 to 17 1/2	1 7/8
17 1/2 to 31 1/2	2 1/8
Over 31 1/2	6

This diagram illustrates the information found in Table 200-1. The size of the opening in the guard, or between the bottom edge of the guard and the feed table is small enough to prevent any part of the operator's body from reaching the hazardous area.

Illustration #1 - Distance from hazard to Guard (A)

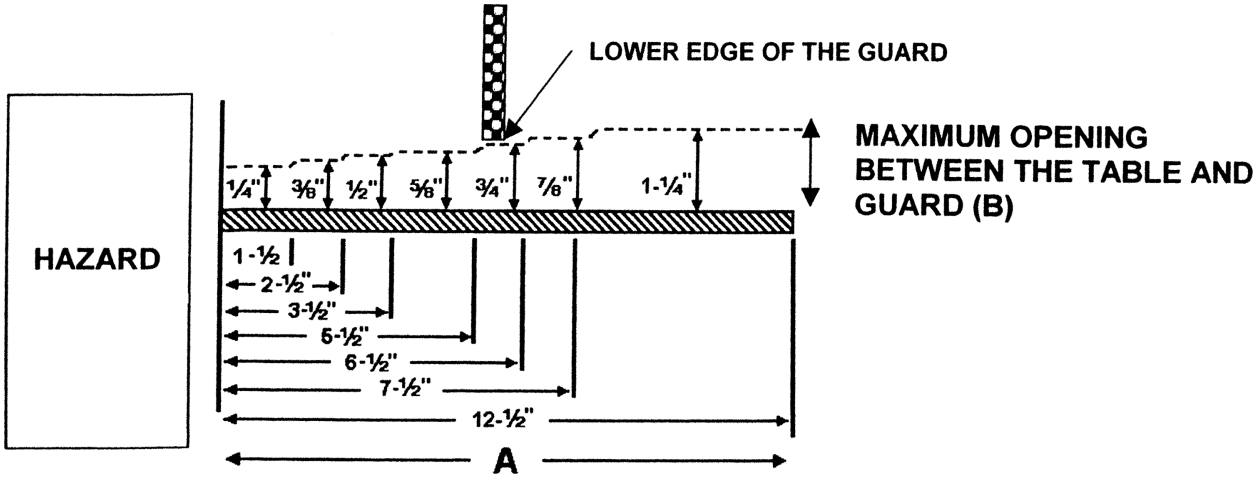

((~~DEVICES~~))

NEW SECTION

WAC 296-806-20043 Devices.

You must meet the requirements…	in this section:
Make sure devices meet these requirements	WAC 296-806-20044
Make sure light curtains meet these requirements	WAC 296-806-20046
Make sure pressure-sensitive mats meet these requirements	WAC 296-806-20048
Make sure restraint or pullback devices meet these requirements	WAC 296-806-20050

You must meet the requirements…	in this section:
Make sure two-hand devices meet these requirements	WAC 296-806-20052
Make sure devices used with barrier guards meet these requirements	WAC 296-806-20054

AMENDATORY SECTION (Amending WSR 04-14-028, filed 6/29/04, effective 1/1/05)

WAC 296-806-20044 Make sure devices meet these requirements. ((~~You must:~~

~~•~~)) You must make sure devices used to safeguard employees do either of the following:

((–)) (1) Stop the motion of a moving part before an employee comes in contact with it and has to be manually reset before machines can be restarted; ((~~OR~~

–)) or

(2) Be designed and constructed to prevent the operator from having any part of their body in the danger zone during the hazardous part of the operating cycle.

Reference: For more information on installation of safety devices, see Performance criteria for safeguarding, ANSI B11.19-2003.

AMENDATORY SECTION (Amending WSR 04-14-028, filed 6/29/04, effective 1/1/05)

WAC 296-806-20046 Make sure light curtains meet these requirements.

((~~IMPORTANT:~~)) **Important:**

All devices must meet the general requirements for devices found in, Make sure devices meet these requirements, WAC 296-806-20044.

((~~You must:~~

~~•~~)) (1) You must make sure light curtains, when used:

((–)) (a) Respond to the presence of an operator's hand, other body part, or a work piece.

((–)) (b) Have indicators that are easily seen by the operator showing when the device is functioning or has been bypassed.

Note: Even if a shiny reflective object or work piece is used with a light curtain or other electro-optical device, it should still respond to the operator's hand or other body part.

((~~You must:~~

~~•~~)) (2) You must make sure only authorized persons can make the following adjustments to light curtains:

((–)) (a) Variations in operating conditions.

((–)) (b) Fixed or channel blanking.

((–)) (c) Floating blanking (sometimes referred to as floating channel or floating window features).

((~~•~~)) (3) You must safeguard access to the point of operation that is **not** protected by light curtains.

Reference: For more information on light curtains and their requirements, see Performance criteria for safeguarding, ANSI B11.19-2003

AMENDATORY SECTION (Amending WSR 04-14-028, filed 6/29/04, effective 1/1/05)

WAC 296-806-20048 Make sure pressure-sensitive mats meet these requirements.

((~~IMPORTANT:~~)) **Important:**

All devices must meet the general requirements for devices found in, Make sure devices meet these requirements, WAC ((~~296-806-2004~~)) 296-806-20044.

((~~You must:~~

~~•~~)) You must make sure pressure-sensitive mats:

((~~–~~)) (1) Detect the presence or absence of the operator or others.

((~~–~~)) (2) Send the stop command and prevent successive machine cycles if any single component fails.

((~~–~~)) (3) Are connected with the machine control system so the device's stop signal immediately stops action of the machine tool and requires use of the start control before the machine can begin another cycle.

((~~–~~)) (4) Are located so that the operator ((~~can not~~)) **cannot** reach the recognized hazard before hazardous motion has stopped.

((~~–~~)) (5) Have an indicator easily seen by the operator that shows the mat is operating.

AMENDATORY SECTION (Amending WSR 04-14-028, filed 6/29/04, effective 1/1/05)

WAC 296-806-20050 Make sure restraint or pullback devices meet these requirements.

((~~IMPORTANT:~~)) **Important:**

All devices must meet the general requirements for devices found in, Make sure devices meet these requirements, WAC 296-806-20044.

((~~You must:~~

~~•~~)) You must make sure restraint or pullback devices:

((~~–~~)) (1) Prevent the operator from reaching into the point of operation or withdraw the operator's hands from the point of operation before motion of the machine creates a hazard.

((~~–~~)) (2) Have fasteners, pins, and other items used to secure and maintain the setting of the device applied in a way that minimizes loosening, slipping, or failure during use.

((~~–~~)) (3) Are worn inside gloves, if used, so if a glove becomes trapped inside a machine or tool, the device can still remove the operator's hand from the hazard area.

AMENDATORY SECTION (Amending WSR 04-14-028, filed 6/29/04, effective 1/1/05)

WAC 296-806-20052 Make sure two-hand devices meet these requirements.

((~~IMPORTANT:~~)) **Important:**

All devices must meet the general requirements for devices found in, Make sure devices meet these requirements, WAC 296-806-20044.

((~~You must:~~

~~•~~)) You must make sure two-hand devices:

((–)) (1) Protect each hand device against accidental operation.

((–)) (2) Require simultaneous operation of both hand devices to begin the cycle, including the first cycle (automatic mode).

((–)) (3) Are provided with an antirepeat feature when used in single cycle mode.

((–)) (4) Have a set of devices for each operator if more than one needs to be safeguarded.

((–)) (5) Are located far enough from the nearest hazard so the operator ((~~can not~~)) **cannot** reach the hazard before hazardous motion stops.

Reference: For more information on proper installation of safety devices, see Performance criteria for safeguarding, ANSI B11.19-2003.

AMENDATORY SECTION (Amending WSR 04-14-028, filed 6/29/04, effective 1/1/05)

WAC 296-806-20054 Make sure devices used with barrier guards meet these requirements.

((~~IMPORTANT:~~)) **Important:**

All devices must meet the general requirements for devices found in, Make sure devices meet these requirements, WAC 296-806-20044.

((~~You must:~~

~~•~~)) (1) You must make sure movable barrier devices:

((–)) (a) Return to the open position if they encounter an obstruction while enclosing the hazardous area.

((–)) (b) Are designed so the operator or others cannot reach the hazard by reaching over, under, around or through the device when it is in the closed position.

((~~•~~)) (2) You must make sure interlocks used with barrier guards do **all** of the following:

((–)) (a) Stop hazardous motion of machines when interlocks are open.

((–)) (b) Are **not** easily bypassed.

((–)) (c) Are designed and installed so that closing the interlocks will not cause a hazard to employees.

((~~DISTANCE~~))

NEW SECTION

WAC 296-806-20055 Distance.

You must meet the requirements…	in this section:
Make sure safeguarding by distance meets these requirements	WAC 296-806-20056
Make sure guardrails used for safeguarding meet these requirements	WAC 296-806-20058

AMENDATORY SECTION (Amending WSR 04-14-028, filed 6/29/04, effective 1/1/05)

WAC 296-806-20056 Make sure safeguarding by distance meets these requirements. ((~~You must:~~

~~•~~)) You must make sure means used to safeguard by distance do both of the following:

((–)) (1) Prevent parts or material from falling on employees below; ((~~AND~~

–)) and

(2) Separate employees on fixed ladders, stairs, floors, or other walking or working surfaces from the hazard by:

((■)) (a) More than seven feet vertically; ((~~OR~~

■)) or

(b) A horizontal distance that prevents employees from contacting or being injured by the hazard according to the distances in Table 200-2.

((~~TABLE 200-2~~

~~SAFE DISTANCES FROM FIXED BARRIERS TO HAZARDS~~))

Table 200-2 helps you identify either the required horizontal distance from the hazard to the barricade (B), or the required height of the barricade (C), as long as you know A and either variable, B or C.

Table 200-2
Safe Distances for Fixed Barricades (B)

Height of the Hazard (A)	Height of the Barricade (C)							
	96	86	78	71	63	55	48	40
96	0	4	4	4	4	4	4	4
86	....	10	14	16	20	20	24	24
78	....	....	14	20	24	28	36	43
71	....	....	....	24	36	36	40	43
63	....	....	....	20	36	36	40	51
55	....	....	....	4	32	36	40	51
48	....	....	....	....	20	36	40	55
40	....	....	....	....	12	36	40	55
32	....	....	....	....	....	24	36	51
24	....	....	....	....	....	....	20	48
16	....	....	....	....	....	....	12	48
8	....	....	....	....	....	....	8	43

Note: The height and distance requirements of Table 200-2 are designed to safeguard workers from a fixed hazard. If a hazard involves flying chips, fluids, parts or materials, the barrier height, distance, and construction may need to be adjusted to provide adequate protection.

Illustration 2 - How to measure variables for Table 2

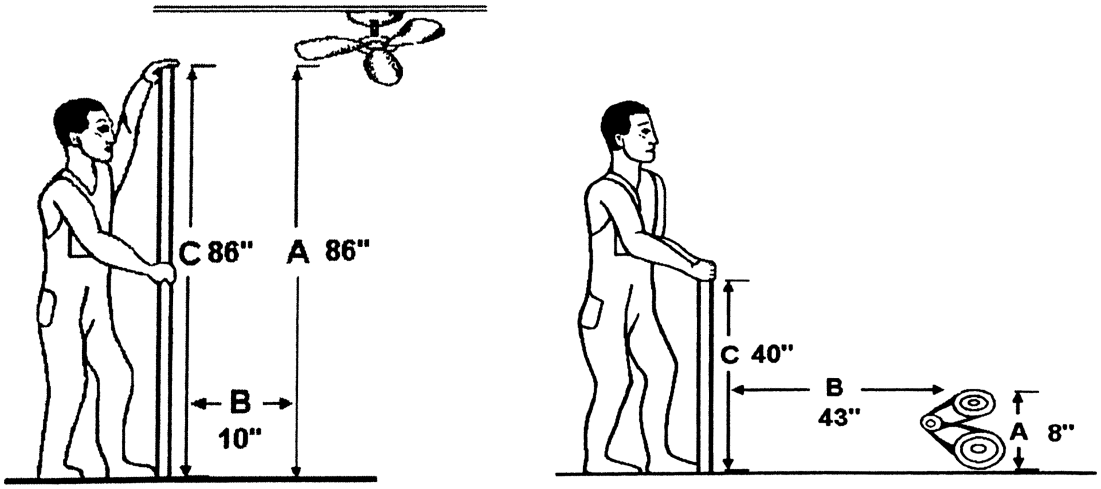

Examples:

((•)) (1) If the height of the hazard (A) is seventy-eight inches, and the horizontal distance from the hazard to the barricade (B) is fourteen inches, the required height of the barricade (C) is seventy-eight inches.

((•)) (2) If the height of the hazard (A) is eighty-six inches, and the height of the barricade (C) is fifty-five inches, then the required horizontal distance from the hazard to the barricade (B) is twenty inches.

AMENDATORY SECTION (Amending WSR 04-14-028, filed 6/29/04, effective 1/1/05)

WAC 296-806-20058 Make sure guardrails used for safeguarding meet these requirements.

Note: Guardrails may be used to safeguard:
((•)) 1. Flywheels.
((•)) 2. Cranks and connecting rods.
((•)) 3. Tail rods and extension piston rods.
((•)) 4. Horizontal belts in a power generating room.
((•)) 5. Clutches, cutoff couplings, or clutch pulleys in an engine room occupied only by an attendant.
((•)) 6. Power transmission parts on a runway used only for oiling, maintenance, running adjustment, or repair work.

((~~You must:~~

~~•~~)) (1) You must make sure top rails are:

((–)) (a) Smooth-surfaced.

((–)) (b) Strong enough to withstand a force of at least two hundred pounds.

((–)) (c) Between thirty-nine and forty-five inches above the floor, platform, runway, or ramp.

((•)) (2) You must make sure guardrails have an intermediate rail (midrail) installed approximately halfway between the top rail and the floor, platform, runway, or ramp.

((•)) (3) You must make sure rails do not extend beyond the end posts of the guardrail and create a projection hazard.

((•)) (4) You must make sure toe boards, if required by this chapter to safeguard a machinery hazard, are:

((–)) (a) At least four inches high.

((–)) (b) Securely fastened in place with no more than one-fourth inch between the bottom of the toe board and the floor, platform, runway, or ramp.

((–)) (c) Made of substantial material that is either solid or that has openings in the material no larger than one inch.

((~~REQUIREMENTS FOR SPECIFIC MACHINE HAZARDS~~))

NEW SECTION

WAC 296-806-300 Requirements for specific machine hazards.

You must meet the requirements…	in this section:
Fit arbors and mandrels to the machine	WAC 296-806-30002
Safeguard belt and rope drives	WAC 296-806-30004
Make sure belt or rope drives meet these requirements	WAC 296-806-30006
Protect employees while shifting belts on belt and pulley drives	WAC 296-806-30008
Make sure belt tighteners meet these requirements	WAC 296-806-30010
Safeguard cams, connecting rods, tail rods, and extension piston rods	WAC 296-806-30012
Safeguard chain and sprocket drives	WAC 296-806-30014
Safeguard fan blades	WAC 296-806-30016

AMENDATORY SECTION (Amending WSR 04-14-028, filed 6/29/04, effective 1/1/05)

WAC 296-806-30002 Fit arbors and mandrels to the machine. ((~~You must:~~

~~•~~)) (1) You must make sure that arbors and mandrels:

((–)) (a) Have firm and secure bearing.

((–)) (b) Are free from play.

((~~•~~)) (2) You must only place or mount attachments on a machine arbor that have been accurately machined to the correct size and shape.

AMENDATORY SECTION (Amending WSR 04-14-028, filed 6/29/04, effective 1/1/05)

WAC 296-806-30004 Safeguard belt and rope drives.

((~~Exemption:~~))
EXEMPTION:

((•)) 1. You do not need to safeguard the following types of belts when they are operating at two hundred and fifty linear feet per minute or less:
((–)) a. Flat belts that are:
((■)) i. One inch wide or less.
((■)) ii. Two inches wide or less and have no metal lacings or fasteners.
((–)) b. Round belts one-half inch or less in diameter.
((–)) c. Single-strand v-belts 13/32 inch wide or less.
((•)) 2. You do not need to safeguard belts that are in a room, vault, or similar space that contains only power transmission parts or equipment if the space:
((–)) a. Is controlled by lock and key or has similarly restricted access that allows only authorized persons to enter.
((–)) b. Is well lit.
((–)) c. Has a dry, level, and firm floor.
((–)) d. Has a well-marked route with a vertical clearance of at least five feet six inches for authorized employees to follow to perform their duties.
((•)) 3. You do not need to safeguard belt drives of light or medium duty sewing machines if **all** of the following apply:
((–)) a. It uses either a flat or a round belt without metal lacings and fasteners.
((–)) b. The belt is located above the table top.
((–)) c. The table top is designed so that employees near the machine are not exposed to motion hazards while they work or as they pass by.
((–)) d. The machine is not used to sew heavy materials such as leather, canvas, denim, or vinyl.
((–)) e. The operators' hands are not in, near, or on the wheel, nip point, belt area, or other motion hazard when the machine is operating.

Reference: You may need to follow additional requirements for sewing machines. See, Sewing machines, WAC 296-806-485, later in this chapter for more information.

((~~You must:~~

~~•~~)) (1) You must safeguard belt or rope drives that are seven feet or less above the floor or working surface.

Reference: In the absence of a specific safeguarding method, follow the safeguarding requirements found in safeguarding methods, WAC 296-806-20042 through 296-806-20058. Examples of safeguarding methods include:
((•)) 1. Guards.
((•)) 2. Devices.
((•)) 3. Safeguarding by distance.
((•)) 4. Safeguarding by location.

Note: You may use a nip point and pulley guard on a vertical or inclined belt if it meets **all** of the following requirements:
((•)) 1. Two and one-half inches wide or less.
((•)) 2. Running at a speed of less than one thousand feet per minute.
((•)) 3. Free from metal lacings or fastenings.

((~~You must:~~

~~•~~)) (2) You must safeguard overhead belts located more than seven feet above the floor or working surface if **any of the following** apply:

((–)) (a) The belt is located over a passageway or work space and travels at a speed of eighteen hundred feet per minute or more.

((–)) (b) The distance between the centers of its pulleys is ten feet or more.

((–)) (c) The belt is wider than eight inches.

((~~•~~)) (3) You must safeguard the space between the upper and lower runs of a horizontal belt if there is enough room for an employee to pass between them by providing both:

((–)) (a) A guard along the upper run to keep the belt from contacting the worker or anything they may be carrying; ((~~AND~~

–)) and

(b) A platform over the lower run that has a railing that is completely filled in with wire mesh or other filler or by a solid barrier.

Note: The passage between the two belts is considered safeguarded if you completely block it with a guardrail or other barrier.

((~~Exemption:~~))
EXEMPTION: In a power generating room, only the lower run of a horizontal belt has to be safeguarded.

AMENDATORY SECTION (Amending WSR 04-14-028, filed 6/29/04, effective 1/1/05)

WAC 296-806-30006 Make sure belt or rope drives meet these requirements. ((~~You must:~~))

(1) You must use an idler when your machine uses a quarter-twist belt that can run in either direction.

(2) You must make sure, when it is necessary to apply dressing to moving belts or ropes, that you apply the dressing at a point where the belts or ropes leave the pulley.

(3) You must make sure that a belt shifted by hand is **not** fastened with metal or other material that creates a hazard.

(4) You must make sure a bearing support that is next to a friction clutch or cutoff coupling has self-lubricating bearings that do not need frequent attention.

(5) You must use a substantial belt perch, such as a bracket or roller, when it is not practical to use a loose pulley or idler to keep idle belts away from shafts.

AMENDATORY SECTION (Amending WSR 04-14-028, filed 6/29/04, effective 1/1/05)

WAC 296-806-30008 Protect employees while shifting belts on belt and pulley drives.

((~~Exemption:~~)) EXEMPTION: A belt shifter is not required on a belt and pulley system if:

((•)) 1. It was installed on or before August 17, 1971; ((~~OR~~)) or
((•)) 2. The belt and pulley drive meets **all** of these requirements:
((–)) a. The belt is endless or laced with rawhide.
((–)) b. A nip point guard in front of the cone safeguards the nip point of the belt and pulley.
((–)) c. The nip point guard extends at least to the top of the largest step of the cone and is formed to show the contour of the cone.

((~~**Definition:** A nip point belt and pulley guard is a guard that encloses the pulley and has rounded or rolled edge slots for the belt to pass through.~~

~~**You must:**~~))

(1) You must provide a permanent mechanical belt shifter on belt drives that use either:

((•)) (a) Tight and loose (drive and idler) pulleys; ((~~OR~~
~~•~~)) or

(b) A cone pulley.

(2) You must protect employees from the nip point of the belt and pulley by either:

((•)) (a) The belt shifter or clutch handle; ((~~OR~~
~~•~~)) or

(b) A vertical guard in front of the pulley that extends at least to the top of the largest step of the cone.

(3) You must make sure a belt shifter or clutch handle is:

((•)) (a) Rounded to keep the operator from being injured.

((•)) (b) Easy to reach.

((•)) (c) Positioned to reduce the chance of being accidentally moved.

((•)) (d) Located either:

((–)) (i) Over the machine; ((~~OR~~
~~–~~)) or

(ii) Not higher than six feet six inches above the floor.

(4) You must make sure each belt shifter or clutch handle of the same type in your workplace moves in the same direction to stop a machine, that is, either all right or all left.

((~~Exemption:~~)) **EXEMPTION:** A friction clutch handle on a countershaft carrying two clutch pulleys with open and crossed belts is not required to move in the same direction as all other clutch handles or belt shifters if:
((•)) 1. The clutch handle has three positions; ((~~AND~~)) and
((•)) 2. The machine is at rest when the clutch handle is in the center position.

((~~You must:~~))

(5) You must use a belt shifter to shift a belt on and off a fixed pulley. ((~~•~~)) When a belt shifter cannot be used, you may use a belt pole if it is both:

((–)) (a) Smooth; ((~~AND~~
–)) and

(b) Large enough to grasp securely.

Note: A belt pole is also known as a "belt shipper" or "shipper pole."

((~~You must:~~))

(6) You must provide a locking-type belt shifter or other positive securing device on woodworking machines driven by belts and shafting.

AMENDATORY SECTION (Amending WSR 04-14-028, filed 6/29/04, effective 1/1/05)

WAC 296-806-30010 Make sure belt tighteners meet these requirements. ((~~You must:~~
~~•~~)) (1) You must make sure belt tighteners:

((–)) (a) Are substantially constructed and securely fastened.

((–)) (b) Have bearings that are securely capped.

((–)) (c) Have a mechanism to prevent them from falling.

((~~•~~)) (2) You must make sure belt tighteners used to activate machinery are securely held in the "OFF" position by either:

((–)) (a) Gravity; ((~~OR~~
–)) or

(b) An automatic mechanism that must be released by hand.

AMENDATORY SECTION (Amending WSR 04-14-028, filed 6/29/04, effective 1/1/05)

WAC 296-806-30012 Safeguard cams, connecting rods, tail rods, and extension piston rods. ((~~You must:~~
~~•~~)) (1) You must safeguard cams, connecting rods, tail rods, or extension piston rods that could be contacted by employees.

Reference: In the absence of a specific safeguarding method, follow the safeguarding requirements found in safeguarding methods, WAC 296-806-20042 through 296-806-20058. Examples of safeguarding methods include:
((•)) 1. Guards.
((•)) 2. Devices.
((•)) 3. Safeguarding by distance.
((•)) 4. Safeguarding by location.

((~~You must:~~
~~•~~)) (2) You must make sure guardrails used to safeguard the side or ends of rods are at least fifteen inches away from the rod when it is fully extended.

AMENDATORY SECTION (Amending WSR 04-14-028, filed 6/29/04, effective 1/1/05)

WAC 296-806-30014 Safeguard chain and sprocket drives.

((~~Exemption:~~)) **EXEMPTION:** This section does not apply to hand-operated sprockets.

((~~You must:~~

~~•~~)) (1) You must enclose chains and sprocket wheels that are seven feet or less above the floor or working surface.

((~~•~~)) (2) You must make sure chain and sprocket drive enclosures that extend over machine or other working areas protect workers from falling drive parts.

AMENDATORY SECTION (Amending WSR 04-14-028, filed 6/29/04, effective 1/1/05)

WAC 296-806-30016 Safeguard fan blades.

Reference: In the absence of a specific safeguarding method, follow the safeguarding requirements found in safeguarding methods, WAC 296-806-20042 through 296-806-20058. Examples of safeguarding methods include:
((•)) 1. Guards.
((•)) 2. Devices.
((•)) 3. Safeguarding by distance.
((•)) 4. Safeguarding by location.

((~~Exemption:~~)) **EXEMPTION:** A fan is considered guarded if it meets all of the following requirements:

((–)) 1. It is in a basement, tower, or room locked against unauthorized entrance.
((–)) 2. The vertical clearance in passageways between the floor and power transmission beams, ceiling, or any other objects, is not less than five feet six inches.
((–)) 3. The intensity of illumination must be a minimum of ten foot candles when the area is occupied.
((–)) 4. The footing is dry, firm, and level.
((–)) 5. The route followed by the oiler or authorized personnel is protected in such a manner as to prevent accident.
((–)) 6. The periphery of the fan blade is covered by a shroud.

((~~You must:~~

~~•~~)) (1) You must protect employees from exposure to the blades of any fan less than seven feet above the floor or working surface.

((~~•~~)) (2) You must prevent rods, pipes, or other material being handled by workers, from contacting moving fan blades.

Reference: For guard opening requirements, see Table 200-1, Largest Allowable Guard Opening in, Make sure guards meet these requirements, WAC 296-806-20042.

((~~FLYWHEELS~~))

NEW SECTION

WAC 296-806-30017 Flywheels.

You must meet the requirements…	in this section:
Safeguard flywheels	WAC 296-806-30018
Safeguard gears	WAC 296-806-30020
Safeguard projections on moving parts	WAC 296-806-30022
Safeguard pulleys	WAC 296-806-30024
Make sure pulleys meet these requirements	WAC 296-806-30026
Safeguard revolving drums, barrels, and containers	WAC 296-806-30028
Safeguard shafting	WAC 296-806-30030
Make sure shafting meets these requirements	WAC 296-806-30032
Safeguard unused keyways	WAC 296-806-30034
Make sure revolving collars meet these requirements	WAC 296-806-30036
Safeguard counterweights	WAC 296-806-30038

AMENDATORY SECTION (Amending WSR 04-14-028, filed 6/29/04, effective 1/1/05)

WAC 296-806-30018 Safeguard flywheels. ((~~You must:~~

~~•~~)) (1) You must safeguard flywheels that have any part of the wheel seven feet or less above the floor or working surface with either:

((–)) (a) An enclosure; ((~~OR~~

–)) or

(b) A guardrail, at least fifteen inches but no more than twenty inches from the rim.

((~~•~~)) (2) You must make sure enclosures that safeguard flywheels located above a working area are strong enough to hold the weight of the wheel, if a shaft or wheel mounting fails.

((~~•~~)) (3) You must provide a toeboard on guardrails used to safeguard flywheels that have any part of the wheel within twelve inches of the floor or working surface.

((~~•~~)) You must do both of the following to safeguard spoked flywheels that are five feet or less in diameter with smooth rims, when enclosures or guardrails cannot be used:

((–)) (a) Cover the spokes on the exposed side of the wheel with a disk guard that creates a smooth surface and edge; ((~~AND~~

–)) and

(b) Remove or cover keys or other dangerous projections on the wheel that are not covered by the disk guard.

((~~Exemption:~~))
EXEMPTION:

((~~•~~)) 1. You may leave an open space of four inches or less between the outside edge of the disk guard and the rim of the spoked flywheel to make it easier to turn the wheel over.

((~~•~~)) 2. You may use an adjustable guard for the flywheel of a gasoline or diesel engine for starting the engine or for making running adjustments. A slot opening for a jack bar is permitted.

AMENDATORY SECTION (Amending WSR 04-14-028, filed 6/29/04, effective 1/1/05)

WAC 296-806-30020 Safeguard gears. ((~~You must:~~

~~•~~)) You must safeguard gears that are seven feet or less above the floor or working surface.

Reference: In the absence of a specific safeguarding method, follow the safeguarding requirements found in safeguarding methods, WAC 296-806-20042 through 296-806-20058. Examples of safeguarding methods include:
((•)) 1. Guards.
((•)) 2. Devices.
((•)) 3. Safeguarding by distance.
((•)) 4. Safeguarding by location.

((~~Exemption:~~)) EXEMPTION: You do not need to guard hand-operated gears that are used only to adjust machine parts that stop when the gears are not being turned by hand.

AMENDATORY SECTION (Amending WSR 04-14-028, filed 6/29/04, effective 1/1/05)

WAC 296-806-30022 Safeguard projections on moving parts. ((~~You must:~~

~~•~~)) You must safeguard projections on moving parts such as keys, setscrews, bolts, and nuts, by:

((~~–~~)) (1) Removing them.

((~~–~~)) (2) Making them flush.

((~~–~~)) (3) Guarding with metal covers.

((~~Exemption:~~)) EXEMPTION: This requirement does not apply to keys or setscrews that are:

((•)) 1. Within an enclosure.
((•)) 2. Below the plane of the rim of a pulley that is less than twenty inches in diameter.
((•)) 3. Located where employee contact is not possible.

AMENDATORY SECTION (Amending WSR 04-14-028, filed 6/29/04, effective 1/1/05)

WAC 296-806-30024 Safeguard pulleys. ((~~You must:~~

~~•~~)) You must safeguard pulleys that have any part of the pulley seven feet or less above the floor or working surface.

Reference: In the absence of a specific safeguarding method, follow the safeguarding requirements found in safeguarding methods, WAC 296-806-20042 through 296-806-20058. Examples of safeguarding methods include:
((•)) 1. Guards.
((•)) 2. Devices.
((•)) 3. Safeguarding by distance.
((•)) 4. Safeguarding by location.

((~~Exemption:~~)) EXEMPTION: You do not need to safeguard pulleys that are in a room, vault, or similar space that contain only power transmission parts or equipment if the space:
((•)) 1. Is controlled by lock and key or has similarly restricted access that allows only authorized persons to enter.
((•)) 2. Is well lit.
((•)) 3. Has a dry, level, and firm floor.
((•)) 4. Has a well-marked route with a vertical clearance of at least five feet six inches for authorized employees to follow to perform their duties.

AMENDATORY SECTION (Amending WSR 04-14-028, filed 6/29/04, effective 1/1/05)

WAC 296-806-30026 Make sure pulleys meet these requirements. ((~~You must:~~))

(1) You must make sure pulleys are designed and balanced for the speed at which they operate.

(2) You must make sure **not** to use pulleys that are cracked or have a piece broken out of the rim.

AMENDATORY SECTION (Amending WSR 04-14-028, filed 6/29/04, effective 1/1/05)

WAC 296-806-30028 Safeguard revolving drums, barrels, and containers. ((~~You must:~~

~~•~~)) You must safeguard revolving drums, barrels, or containers by an enclosure that is interlocked with the drive mechanism so that they cannot revolve unless the enclosure is in place.

AMENDATORY SECTION (Amending WSR 04-14-028, filed 6/29/04, effective 1/1/05)

WAC 296-806-30030 Safeguard shafting.

((~~Exemption:~~)) EXEMPTION: You do not need to safeguard shafting that is in a room, vault, or similar space that contains only power transmission parts or equipment if the space:

((~~•~~)) 1. Is controlled by lock and key or has similarly restricted access that allows only authorized persons to enter.

((~~•~~)) 2. Is well lit.

((~~•~~)) 3. Has a dry, level, and firm floor.

((~~•~~)) 4. Has a well-marked route with a vertical clearance of at least five feet six inches for authorized employees to follow to perform their duties.

((~~You must:~~

~~•~~)) (1) You must enclose shafting that is seven feet or less above the floor or working surface.

((~~•~~)) (2) You must make sure projecting shaft ends either:

((~~–~~)) (a) Have a smooth edge, smooth end, and project no more than one-half the diameter of the shaft; ((~~OR~~

~~–~~)) or

(b) Are guarded by a nonrotating cap or safety sleeve.

((~~•~~)) (3) You must safeguard shafting under a bench or table by enclosing it in a stationary casing or by using a trough with sides that both:

((~~–~~)) (a) Cover the shafting to within six inches of the bottom of the table or to within six inches of the floor or working surface, whichever is appropriate; ((~~AND~~

~~–~~)) and

(b) Extend two inches beyond the end of the shafting.

AMENDATORY SECTION (Amending WSR 04-14-028, filed 6/29/04, effective 1/1/05)

WAC 296-806-30032 Make sure shafting meets these requirements. ((~~You must:~~))

(1) You must keep shafting free of:

((~~•~~)) (a) Excessive oil or grease.

((~~•~~)) (b) Rust or pitting from corrosion.

(2) You must secure shafting against excessive endwise movement.

AMENDATORY SECTION (Amending WSR 04-14-028, filed 6/29/04, effective 1/1/05)

WAC 296-806-30034 Safeguard unused keyways. ((~~You must:~~

~~•~~)) You must fill, cover, or otherwise safeguard all unused keyways.

Reference: In the absence of a specific safeguarding method, follow the safeguarding requirements found in safeguarding methods, WAC 296-806-20042 through 296-806-20058. Examples of safeguarding methods include:
((•)) 1. Guards.
((•)) 2. Devices.
((•)) 3. Safeguarding by distance.
((•)) 4. Safeguarding by location.

AMENDATORY SECTION (Amending WSR 04-14-028, filed 6/29/04, effective 1/1/05)

WAC 296-806-30036 Make sure revolving collars meet these requirements. ((~~You must:~~

~~•~~)) (1) You must make sure revolving collars are cylindrical.

((~~•~~)) (2) You must make sure screws or bolts used in the collar do **not** project beyond the outside of the collar.

AMENDATORY SECTION (Amending WSR 04-14-028, filed 6/29/04, effective 1/1/05)

WAC 296-806-30038 Safeguard counterweights. ((~~You must:~~

~~•~~)) You must provide safeguarding for all counterweights where employees are exposed to contact.

Reference: In the absence of a specific safeguarding method, follow the safeguarding requirements found in safeguarding methods, WAC 296-806-20042 through 296-806-20058. Examples of safeguarding methods include:
((•)) 1. Guards.
((•)) 2. Devices.
((•)) 3. Safeguarding by distance.
((•)) 4. Safeguarding by location.

((~~ADDITIONAL REQUIREMENTS FOR SOME MACHINES AND MACHINE OPERATIONS~~))

AMENDATORY SECTION (Amending WSR 04-14-028, filed 6/29/04, effective 1/1/05)

WAC 296-806-400 ((~~Summary.~~)) Additional requirements for some machines and machine operations.

Summary

If your specific machine or operation is not listed here, then follow the "Requirements for all machines" found in this chapter, WAC 296-806-200 and 296-806-300.

Your responsibility:

To protect employees from hazards associated with specific machines and their operations in your workplace.

((~~**You must:**~~

~~Abrasive wheels and machines~~
~~WAC 296-806-405.~~
~~Calenders~~
~~WAC 296-806-410.~~
~~Compactors~~
~~WAC 296-806-415.~~
~~Conveyors~~
~~WAC 296-806-420.~~
~~Food processing equipment~~
~~WAC 296-806-425.~~
~~Forging machines~~
~~WAC 296-806-430.~~
~~Garbage (waste) disposals~~
~~WAC 296-806-435.~~
~~Glue spreaders~~
~~WAC 296-806-440.~~
~~Ironworkers~~
~~WAC 296-806-445.~~
~~Lathes~~
~~WAC 296-806-450.~~
~~Mechanical power presses~~
~~WAC 296-806-455.~~
~~Mills~~
~~WAC 296-806-460.~~
~~Press brakes~~
~~WAC 296-806-465.~~
~~Roll-forming and bending machines~~
~~WAC 296-806-470.~~
~~Sanding machines~~
~~WAC 296-806-475.~~
~~Saws and cutting heads~~
~~WAC 296-806-480.~~
~~Sewing machines~~
~~WAC 296-806-485.~~))

Requirements for this topic…	**are in this part:**
Abrasive wheels	WAC 296-806-405
Calenders	WAC 296-806-410
Compactors	WAC 296-806-415
Conveyors	WAC 296-806-420
Food processing equipment	WAC 296-806-425
Forging machines	WAC 296-806-430
Garbage (waste) disposals	WAC 296-806-435
Glue spreaders	WAC 296-806-440
Ironworkers	WAC 296-806-445
Lathes	WAC 296-806-450
Mechanical power presses	WAC 296-806-455
Mills	WAC 296-806-460
Press brakes	WAC 296-806-465
Roll-forming and bending machines	WAC 296-806-470
Sanding machines	WAC 296-806-475
Saws and cutting heads	WAC 296-806-480
Sewing machines	WAC 296-806-485

((~~ABRASIVE WHEELS~~))

AMENDATORY SECTION (Amending WSR 07-03-163, filed 1/24/07, effective 4/1/07)

WAC 296-806-405 ((~~Summary.~~)) Abrasive wheels.

Summary

((~~•~~)) In addition to the requirements in this section, you need to refer to the following sections of this chapter in order to fully protect your employees from machine hazards.

((~~•~~)) Requirements for all machines, WAC 296-806-200 and 296-806-300.

((~~•~~)) You need to refer to Portable power tools, chapter 296-807 WAC for requirements relating to hand-held abrasive wheel tools.

This section applies to machines that are not hand held and that use an abrasive wheel.

((~~Exemption:~~)) **EXEMPTION:** This rule does not apply to natural sandstone wheels and metal, wooden, cloth or paper discs having a layer of abrasive on the surface.

((~~**Definition:**~~

~~An *abrasive wheel* is a grinding tool consisting of bonded abrasive grains. This includes diamond and reinforced wheels.~~))

Your responsibility:

To make sure abrasive wheel machines and wheels are safe to use.

((~~You must:~~))

GENERAL REQUIREMENTS FOR ABRASIVE WHEELS

((~~Make sure abrasive wheels and machines are properly designed and constructed~~

~~WAC 296-806-40502.~~

~~Make sure machines have safety guards~~

~~WAC 296-806-40504.~~

~~Make sure safety guards meet specific requirements~~

~~WAC 296-806-40506.~~

~~Provide a tongue guard on bench, pedestal, floorstand, and cylindrical grinders~~

~~WAC 296-806-40508.~~

~~Use a work rest for off-hand grinding~~

~~WAC 296-806-40510.~~

~~**MOUNTING ABRASIVE WHEELS**~~

~~Make sure abrasive wheels are safe to use~~

~~WAC 296-806-40512.~~

~~Mount wheels properly~~

~~WAC 296-806-40514.~~

~~Use proper flanges~~

~~WAC 296-806-40516.~~

~~Make sure flanges are in good condition~~

~~WAC 296-806-40518.~~

~~Use specific flanges for Type 1 cutting-off wheels~~

~~WAC 296-806-40520.~~

~~Use specific flanges for Type 27A cutting-off wheels~~

~~WAC 296-806-40522.~~

~~Use blotters when required~~

~~WAC 296-806-40524.~~

~~Meet specific blotter requirements when using modified Types 6 and 11 wheels (terrazzo)~~

~~WAC 296-806-40526.~~))

You must meet the requirements…	**in this section:**
Make sure abrasive wheels and machines are properly designed and constructed	WAC 296-806-40502
Make sure machines have safety guards	WAC 296-806-40504
Make sure safety guards meet specific requirements	WAC 296-806-40506
Provide a tongue guard on bench, pedestal, floorstand, and cylindrical grinders	WAC 296-806-40508
Use a work rest for off-hand grinding	WAC 296-806-40510

AMENDATORY SECTION (Amending WSR 04-14-028, filed 6/29/04, effective 1/1/05)

WAC 296-806-40502 Make sure abrasive wheels and machines are properly designed and constructed. ((~~You must:~~

~~•~~)) (1) You must make sure abrasive wheels and machines, including safety guards and flanges, manufactured on or after January 1, 2005, meet the design and construction requirements of American National Standards Institute (ANSI) B7.1-2000, Safety Requirements for the Use, Care and Protection of Abrasive Wheels.

((~~•~~)) (2) You must make sure abrasive wheels and machines, including safety guards and flanges, manufactured before January 1, 2005, meet the design and construction requirements of American National Standards Institute (ANSI) B7.1-1970, Safety Code for the Use, Care and Protection of Abrasive Wheels.

Note: There may be a statement on the machine or in the instruction manual that the machine meets the appropriate ANSI standard. If in doubt, check with the manufacturer.

AMENDATORY SECTION (Amending WSR 04-14-028, filed 6/29/04, effective 1/1/05)

WAC 296-806-40504 Make sure machines have safety guards. ((~~**You must:**~~

~~•~~)) (1) You must use abrasive wheels only on machines that have safety guards.

((~~•~~)) (2) You must make sure the safety guard:

((–)) (a) Is mounted so it maintains proper alignment with the wheel.

((–)) (b) Is mounted with fasteners strong enough to keep the guard in position if a wheel breaks.

((–)) (c) Covers the spindle end, nut, and flange projections.

((~~Exemption:~~)) EXEMPTION: Safety guards are not required on machines that use:

((•)) 1. Wheels for internal grinding while advancing, retracting or within the work.
((•)) 2. Types 16, 17, 18, 18R, and 19 cones and plugs and threaded hole pot balls where either:
((–)) a. The work offers protection; ((~~**OR**~~)) or
((–)) b. The size does not exceed three inches in diameter by five inches long.
((•)) 3. Notched, segmented, or continuous rim metal centered diamond lapidary wheels that are:
((–)) a. Used with a coolant deflector; ((~~**AND**~~)) and
((–)) b. Operated at 3,500 SFPM or less.
((•)) 4. Type 1 reinforced wheels that are:
((–)) a. Three inches or less in diameter.
((–)) b. One-fourth inch or less thick.
((–)) c. Operating at peripheral speeds of 9,500 SFPM or less.
((–)) d. Used by operators wearing safety glasses and face shields.
((•)) 5. Valve seating grinding wheels.
((•)) 6. Remotely operated machines in an enclosure that will retain the pieces of a broken wheel.

AMENDATORY SECTION (Amending WSR 04-14-028, filed 6/29/04, effective 1/1/05)

WAC 296-806-40506 Make sure safety guards meet specific requirements. ((~~**You must:**~~

~~•~~)) You must make sure the machine safety guards meet the requirements of Table 405-1, Guard Requirements.

((~~**Definition:**~~

~~Maximum exposure angle is the largest part of a wheel that does not need to be covered by a safety guard.~~))

Note: ((•)) 1. The maximum exposure angle is measured by lines starting at the center of the spindle and extending to the ends of the guard at the wheel periphery.
((•)) 2. Visors and other accessory equipment are used in determining the size of the guard opening only if they are at least as strong as the safety guard.

Table 405-1
Guard Requirements

Machine	Maximum exposure angle and other guard restrictions
Bench, pedestal, or floorstand grinders	• Not higher than ((~~sixty-five~~)) 65 degrees above the horizontal centerline of the wheel • ((~~One-fourth (ninety degrees)~~)) 1/4 (90 degrees) of the wheel for grinding done at or above the horizontal centerline of the wheel • ((~~One hundred twenty-five~~)) 125 degrees if the work has to contact the wheel below the horizontal centerline of the wheel
Cylindrical grinders	• ((~~One-half (one hundred eighty degrees)~~)) 1/2 (180 degrees) of the wheel • Not higher than ((~~sixty-five~~)) 65 degrees above the horizontal centerline of the wheel
Surface grinders	• ((~~One hundred fifty~~)) 150 degrees of the wheel • Not higher than ((~~fifteen~~)) 15 degrees below the horizontal
Cutting-off machines	• ((~~One-half (one hundred eighty degrees)~~)) 1/2 (180 degrees) of the wheel
Swing frame grinders	• ((~~One-half (one hundred eighty degrees)~~)) 1/2 (180 degrees) of the wheel • Encloses the top ((~~one-half~~)) 1/2 of the wheel
Swing frame grinders using cup wheels	• ((~~One-half (one hundred eighty degrees)~~)) 1/2 (180 degrees) of the wheel • Covers the wheel on the side towards the operator
Semiautomatic snagging machines	• ((~~One-half (one hundred eighty degrees)~~)) 1/2 (180 degrees) of the wheel • Covers the wheel on the side towards the operator
Machines used for top grinding	• As small as possible up to ((~~one-sixth (sixty degrees)~~)) 1/6 (60 degrees) of the wheel

AMENDATORY SECTION (Amending WSR 04-14-028, filed 6/29/04, effective 1/1/05)

WAC 296-806-40508 Provide a tongue guard on bench, pedestal, floorstand, and cylindrical grinders. ((~~**You must:**~~
~~•~~)) You must make sure, if the operator stands in front of the opening in the safety guard, that the safety guard (tongue guard) at

the top of the opening is adjusted to within one-fourth inch of the wheel.

((~~**Definition:**~~

~~The tongue guard is an integral part of a safety guard that is located where the upper exposed part of the abrasive wheel meets the safety guard. It can be adjusted as necessary to maintain a set distance from the constantly decreasing diameter of the wheel.~~))

AMENDATORY SECTION (Amending WSR 04-14-028, filed 6/29/04, effective 1/1/05)

WAC 296-806-40510 Use a work rest for off-hand grinding.

((~~Exemption:~~)) **EXEMPTION:** You do not need to use a work rest if:

((•)) 1. The size, shape, weight or finishing area of the workpiece prevents its use; ((~~OR~~)) or
((•)) 2. Contact with the grinding wheel below the horizontal plane of the spindle is necessary.

((~~**You must:**~~

~~•~~)) (1) You must use a work rest to support the work.

((~~•~~)) (2) You must make sure the work rest is:

((–)) (a) Rigidly constructed.

((–)) (b) Adjustable to compensate for wheel wear.

((–)) (c) Adjusted only when the wheel is stopped.

((–)) (d) Securely clamped after each adjustment.

((–)) (e) Kept within one-eighth inch of the wheel.

NEW SECTION

WAC 296-806-40511 Mounting abrasive wheels.

You must meet the requirements…	**in this section:**
Make sure abrasive wheels are safe to use	WAC 296-806-40512
Mount wheels properly	WAC 296-806-40514
Use proper flanges	WAC 296-806-40516
Make sure flanges are in good condition	WAC 296-806-40518
Use specific flanges for Type 1 cutting-off wheels	WAC 296-806-40520
Use specific flanges for Type 27A cutting-off wheels	WAC 296-806-40522
Use blotters when required	WAC 296-806-40524
Meet specific blotter requirements when using modified Types 6 and 11 wheels (terrazzo)	WAC 296-806-40526

AMENDATORY SECTION (Amending WSR 04-14-028, filed 6/29/04, effective 1/1/05)

WAC 296-806-40512 Make sure abrasive wheels are safe to use. ((~~You must:~~

~~•~~)) (1) You must do the following before mounting a wheel:

((–)) (a) Visually inspect the wheel for cracks or damage.

((–)) (b) Perform a ring test for cracks if the size and shape of the wheel permits testing.

((–)) (c) Make sure the spindle speed of the machine is not greater than the operating speed of the wheel.

((~~•~~)) (2) You must make sure a damaged or cracked wheel is not mounted or used.

Note: Wheels that have gouges, grooves, other damage, or material buildup on the grinding surface need to be dressed or trued to correct the problem. Wheels that cannot be trued are considered damaged and cannot be used.

AMENDATORY SECTION (Amending WSR 04-14-028, filed 6/29/04, effective 1/1/05)

WAC 296-806-40514 Mount wheels properly. ((~~You must:~~))

(1) You must make sure wheels fit freely on the spindle, wheel sleeves, or adaptors, and remain free under all grinding conditions.

(2) You must make sure wheel, blotter and flange surfaces that contact each other are flat and free of foreign particles.

(3) You must make sure any reducing bushing used in the wheel hole:

((~~•~~)) (a) Fits freely on the spindle and maintains proper clearance; ((~~AND~~

~~•~~)) and

(b) Does not exceed the width of the wheel or contact the flanges.

(4) You must make sure that multiple wheels mounted between a single set of flanges are either:

((~~•~~)) (a) Cemented together; ((~~OR~~

~~•~~)) or

(b) Separated by spacers that have a diameter and bearing surface that is the same as the mounting flanges.

AMENDATORY SECTION (Amending WSR 04-14-028, filed 6/29/04, effective 1/1/05)

WAC 296-806-40516 Use proper flanges. ((~~You must:~~

~~•~~)) (1) You must mount all abrasive wheels between flanges that have a diameter at least one-third the diameter of the wheel.

((~~Exemption:~~)) EXEMPTION: This flange requirement does not apply to the following wheels:

((•)) 1. Mounted wheels (wheels permanently bonded to a shaft or mandrel).
((•)) 2. Abrasive disc wheels (inserted nut, inserted washer and projecting stud type).
((•)) 3. Plate mounted wheels.
((•)) 4. Cylinder, cup, or segmental wheels mounted in chucks.
((•)) 5. Types 27, 28, and 29 wheels.
((•)) 6. Internal wheels less than two inches in diameter.
((•)) 7. Modified Type 6 and 11 wheels (terrazzo).

((•)) 8. Types 1 and 27A cutting-off wheels.

((~~You must:~~

~~•~~)) (2) You must make sure flanges are:

((–)) (a) Dimensionally accurate.

((–)) (b) Properly balanced.

((–)) (c) Flat.

((–)) (d) Free of rough surfaces or sharp edges.

((~~•~~)) (3) You must make sure the driving flange is:

((–)) (a) Part of the spindle; ((~~OR~~

–)) or

(b) Securely fastened to the spindle.

((~~•~~)) (4) You must make sure, if a wheel is mounted between two flanges, that both flanges:

((–)) (a) Are the same diameter; ((~~AND~~

–)) and

(b) Have equal bearing surfaces.

((~~Exemption:~~)) EXEMPTION: The following wheels do not require same diameter, equal bearing surface flanges:

((•)) 1. Types 27, 28, and 29 wheels with adaptors.
((•)) 2. Modified Types 6 and 11 wheels with tapered K dimension.
((•)) 3. Internal wheels less than two inches in diameter.

AMENDATORY SECTION (Amending WSR 04-14-028, filed 6/29/04, effective 1/1/05)

WAC 296-806-40518 Make sure flanges are in good condition. ((~~You must:~~

~~•~~)) (1) You must make sure flange bearing surfaces are in good condition.

((~~•~~)) (2) You must replace or remachine a flange with a mounting surface that has any of the following problems:

((–)) (a) Warped.

((–)) (b) Burred on the bearing surface.

((–)) (c) Excessively worn (thickness or diameter).

((–)) (d) Out of true.

Reference: Flanges that are refaced or trued need to satisfy minimum dimension requirements specified in Safety Requirements for the Use, Care and Protection of Abrasive Wheels, ANSI B7.1-2000.

AMENDATORY SECTION (Amending WSR 04-14-028, filed 6/29/04, effective 1/1/05)

WAC 296-806-40520 Use specific flanges for Type 1 cutting-off wheels. ((~~You must:~~

~~•~~)) You must mount Type 1 cutting-off wheels between flanges that are:

((–)) (1) Properly relieved with matching bearing surfaces.

((–)) (2) At least one-fourth the wheel diameter.

AMENDATORY SECTION (Amending WSR 04-14-028, filed 6/29/04, effective 1/1/05)

WAC 296-806-40522 Use specific flanges for Type 27A cutting-off wheels. ((~~You must:~~

~~•~~)) You must mount Type 27A cutting-off wheels between flanges that are:

((~~–~~)) (1) Flat (unrelieved) with matching bearing surfaces; ((~~AND~~

~~–~~)) and

(2) At least one-fourth the wheel diameter.

AMENDATORY SECTION (Amending WSR 04-14-028, filed 6/29/04, effective 1/1/05)

WAC 296-806-40524 Use blotters when required.

((~~Exemption:~~)) EXEMPTION: You do not need to use a blotter with any of the following:

((~~•~~)) 1. Mounted wheels (wheels permanently bonded to a shaft or mandrel).
((~~•~~)) 2. Abrasive disc and Type 2 wheels which are mounted by inserted nuts, inserted washers, or projecting studs.
((~~•~~)) 3. Plate mounted wheels.
((~~•~~)) 4. Wheels mounted in chucks (such as cylinders and segmental wheels).
((~~•~~)) 5. Types 27, 28, and 29 wheels.
((~~•~~)) 6. Type 1 and Type 27A cutting-off wheels.
((~~•~~)) 7. Internal wheels less than two inches in diameter.
((~~•~~)) 8. Diamond and cubic boron nitride wheels with metal or carbon fiber cores.

((~~You must:~~

~~•~~)) (1) You must use a blotter between each flange and the abrasive wheel surface to uniformly distribute flange pressure.

((~~•~~)) (2) You must make sure the blotter covers the entire flange contact area.

((~~•~~)) (3) You must use a new blotter each time a wheel is mounted unless the wheel has a blotter already attached to it by the manufacturer.

((~~•~~)) (4) You must make sure scuffed or damaged blotters are not used.

AMENDATORY SECTION (Amending WSR 04-14-028, filed 6/29/04, effective 1/1/05)

WAC 296-806-40526 Meet specific blotter requirements when using modified Types 6 and 11 wheels (terrazzo). ((~~You must:~~

~~•~~)) You must apply the blotter to the flat side only when mounting Modified Types 6 and 11 wheels (terrazzo).

((~~Calenders~~))

AMENDATORY SECTION (Amending WSR 04-14-028, filed 6/29/04, effective 1/1/05)

WAC 296-806-410 ((~~Summary.~~)) Calenders.

Summary

In addition to the requirements in this section, you need to refer to the following sections of this chapter in order to fully protect your employees from machine hazards:

((~~•~~)) Requirements for all machines, WAC 296-806-200 and 296-806-300.

This section applies only to hazards associated with calenders in the rubber and plastics industry where two or more metal rolls are set vertically and revolving in opposite directions.

Your responsibility:

To protect employees from hazards associated with calenders.

((~~**You must:**~~
~~Provide calender safety controls~~
~~WAC 296-806-41002.~~
~~Follow these stopping limit requirements for calenders~~
~~WAC 296-806-41004.~~))

You must meet the requirements…	**in this section:**
Provide calender safety controls	WAC 296-806-41002
Follow these stopping limit requirements for calenders	WAC 296-806-41004

AMENDATORY SECTION (Amending WSR 04-14-028, filed 6/29/04, effective 1/1/05)

WAC 296-806-41002 Provide calender safety controls.

((~~Exemption:~~)) EXEMPTION: These rules do not apply to calenders if the machinery is permanently set up so employees:

((~~•~~)) 1. Cannot reach through, over, under, or around to come in contact with the roll bite; ((~~**OR**~~)) or
((~~•~~)) 2. Cannot be caught between a roll and nearby objects.

((~~**You must:**~~))

(1) You must provide a safety trip control for the face of the calender that meets **all** of the following:

((~~•~~)) (a) Provided in front and back of each calender.

((~~•~~)) (b) Is accessible.

((~~•~~)) (c) Operates readily upon contact.

(2) You must provide **at least one** of the following safety trip controls for the face of the calender:

((~~•~~)) (a) Safety trip rods, tripwire cables or wire center cords that:

((–)) (i) Are within reach of the operator and the bite (nip point).

((–)) (ii) Operate whether pushed or pulled.

((–)) (iii) Are located across each pair of in-running rolls extending the length of the face of the rolls.

((•)) (b) Pressure sensitive body bars that:

((–)) (i) Are approximately forty inches vertically above the working level.

((–)) (ii) Are horizontally at thirty-four inches from the in-running nip point.

((–)) (iii) Operate readily by pressure of the mill operator's body.

(3) You must include safety trip rods, cables or cords, in addition to the pressure sensitive body bars, if **both** of these apply:

((•)) (a) In-running rolls are located below the bar; ((~~AND~~ ~~•~~)) and

(b) The operator needs to duck under the bar.

(4) You must provide a safety cable or wire center cord on both sides of the calender that:

((•)) (a) Operates readily when pushed or pulled.

((•)) (b) Is connected to the safety trip.

Note: ((•)) The center cord should be **all** of the following:
((–)) 1. Twelve inches or less from the faces of the individual rolls.
((–)) 2. At least two inches from the calender frame.
((–)) 3. Anchored to the frame not more than six inches from the floor or operator's platform.

AMENDATORY SECTION (Amending WSR 04-14-028, filed 6/29/04, effective 1/1/05)

WAC 296-806-41004 Follow these stopping limit requirements for calenders. ((~~You must:~~ ~~•~~)) You must make sure that calenders are stopped within one and three-quarters percent of the fastest speed at which they operate when empty. ((–)) When calenders operate at more than two hundred fifty feet per minute, stopping distances above one and three-quarters percent of their fastest speed are allowed, but must have engineering support.

((~~COMPACTORS~~))

AMENDATORY SECTION (Amending WSR 04-14-028, filed 6/29/04, effective 1/1/05)

WAC 296-806-415 ((~~Summary.~~)) Compactors. Summary

In addition to the requirements in this section, you need to refer to the following sections of this chapter in order to fully protect your employees from machine hazards:

((~~•~~)) Requirements for all machines, WAC 296-806-200 and 296-806-300.

This section applies to all stationary compactors in your workplace.

Your responsibility:

To protect employees from hazards associated with stationary compactors.

((~~**You must:**~~

~~Safeguard hazardous moving parts of stationary compactors WAC 296-806-41502.~~

~~Follow these requirements for compactor controls WAC 296-806-41504.~~

~~Follow these requirements for compactor access doors and covers WAC 296-806-41506.~~

~~Follow these requirements for compactors that cycle automatically WAC 296-806-41508.~~))

You must meet the requirements…	**in this section:**
Safeguard hazardous moving parts of stationary compactors	WAC 296-806-41502
Follow these requirements for compactor controls	WAC 296-806-41504
Follow these requirements for compactor access doors and covers	WAC 296-806-41506
Follow these requirements for compactors that cycle automatically	WAC 296-806-41508

AMENDATORY SECTION (Amending WSR 04-14-028, filed 6/29/04, effective 1/1/05)

WAC 296-806-41502 Safeguard hazardous moving parts of stationary compactors. ((~~**You must:**~~

~~•~~)) (1) You must prevent the compactor from operating while employees have any body parts in the compactor or hazard area.

((~~•~~)) (2) You must provide a safeguarding method that prevents employees from putting hands, fingers, or any body part into the compactor during operation.

Note: Examples of safeguarding methods include:
((•)) 1. Making sure the compactor will not compact material while the gate or door is open.
((•)) 2. Installing a guard, loading hopper, or enclosure at least forty-two inches high that prevents:
((–)) a. Entry of hands, fingers, or any body part into the loading chamber during operation.
((–)) b. An operator from being caught between moving parts of the equipment and material.
((–)) c. The creation of any hazard between the guard and moving parts.
((•)) 3. You may also provide sustained manual pressure controls located so the operator cannot reach, but can still see, the point of operation if a guard is not used.

Reference: For additional requirements when adjusting or clearing jams from compactors, see Lockout/tagout (control of hazardous energy), chapter 296-803 WAC.

AMENDATORY SECTION (Amending WSR 04-14-028, filed 6/29/04, effective 1/1/05)

WAC 296-806-41504 Follow these requirements for compactor controls. ((~~You must:~~

~~•~~)) You must follow these requirements for compactor controls:

((–)) (1) Each control must have its function clearly labeled.

((–)) (2) Controls must be designed and located to prevent them from unintentionally activating.

((–)) (3) Electric stop buttons, including emergency stop buttons, must be((~~÷~~

~~■~~)) red in color, distinguishable from all other controls by size, and not recessed.

((–)) (4) Emergency stop controls must be either:

((~~■~~)) (a) Readily accessible to the operator; ((~~**OR**~~

~~■~~)) or

(b) Located within three feet (91.4 cm) of the point of operation or feed area **or** if chute fed, within three feet (91.4 cm) of the access door.

((–)) (5) An electrical disconnect must be located within sight, no more than fifty feet (1,524 cm), from the operating control panel.

AMENDATORY SECTION (Amending WSR 04-14-028, filed 6/29/04, effective 1/1/05)

WAC 296-806-41506 Follow these requirements for compactor access doors and covers. ((~~You must:~~

~~•~~)) (1) You must make sure access covers meet at least one of the following:

((–)) (a) Interlocked.

((–)) (b) Secured by a lockable device.

((–)) (c) Removable by hand tools only.

((~~•~~)) (2) Make sure any loading chamber access door has an interlock system that prevents cycling motion when the door is open.

AMENDATORY SECTION (Amending WSR 04-14-028, filed 6/29/04, effective 1/1/05)

WAC 296-806-41508 Follow these requirements for compactors that cycle automatically. ((~~You must:~~

~~•~~)) You must use automatic cycling controls only on compactors where the loading chamber is located so that it cannot be accessed during operation.

((~~CONVEYORS~~))

AMENDATORY SECTION (Amending WSR 04-14-028, filed 6/29/04, effective 1/1/05)

WAC 296-806-420 ((~~Summary.~~)) Conveyors.

Summary

If your specific conveyor or operation is not listed here, then follow any general requirements in this section along with the "Requirements for all machines" found in this chapter, WAC 296-806-200 and 296-806-300.

This section applies to hazards related to conveyors and conveying systems, including bulk material, package, or unit handling types. These requirements are designed to protect employees operating, maintaining, cleaning, and working around conveyors.

((~~Exemption:~~)) **EXEMPTION:** This section does not apply to conveyor systems used primarily for moving people.

Your responsibility:

To make sure all conveyors in your workplace are constructed, operated, and maintained in a safe manner.

((~~You must:~~))

GENERAL REQUIREMENTS FOR CONVEYORS

((~~Follow these requirements for conveyors~~
~~WAC 296-806-42002.~~
~~Provide emergency stops on conveyors~~
~~WAC 296-806-42004.~~
~~Label conveyor controls~~
~~WAC 296-806-42006.~~
~~Prohibit riding on conveyors~~
~~WAC 296-806-42008.~~
~~Provide safe access to conveyors~~
~~WAC 296-806-42010.~~
~~Provide backstop or antirunaway devices to incline, decline, or vertical conveyors~~
~~WAC 296-806-42012.~~
~~Make only safe alterations to conveyors~~
~~WAC 296-806-42014.~~
~~Inspect and replace worn conveyor parts~~
~~WAC 296-806-42016.~~
~~Follow these requirements for replacing conveyor parts~~
~~WAC 296-806-42018.~~
~~Follow these requirements for spill guards~~
~~WAC 296-806-42020.~~
~~Provide pedestrian overpasses for conveyors~~
~~WAC 296-806-42022.~~
~~Guard openings to hoppers and chutes~~
~~WAC 296-806-42024.~~
~~Install guideposts~~
~~WAC 296-806-42026.~~

~~**BELT CONVEYORS**~~

~~Guard nip points on belt conveyors~~
~~WAC 296-806-42028.~~
~~Install emergency stop controllers on overland belt conveyors~~
~~WAC 296-806-42030.~~
~~Install belt conveyor overpasses~~
~~WAC 296-806-42032.~~
~~**CHAIN CONVEYORS**~~
~~Safeguard chain conveyors~~
~~WAC 296-806-42034.~~
~~Guard return strands on chain conveyors~~
~~WAC 296-806-42036.~~
~~Guard chain conveyors that are used as a transfer mechanism~~
~~WAC 296-806-42038.~~
~~**ELEVATOR CONVEYORS**~~
~~Prevent material from falling off of elevator conveyors~~
~~WAC 296-806-42040.~~
~~**INCLINED RECIPROCATING CONVEYORS (SHAKERS)**~~
~~Provide protection where employees must load shakers~~
~~WAC 296-806-42042.~~
~~Provide grating over silo and bunker openings for shuttle conveyors~~
~~WAC 296-806-42044.~~
~~**MOBILE CONVEYORS**~~
~~Guard wheels and rails on mobile conveyors~~
~~WAC 296-806-42046.~~
~~Prevent hazardous motion on mobile conveyors~~
~~WAC 296-806-42048.~~
~~Provide a detector for mobile conveyors~~
~~WAC 296-806-42050.~~
~~Provide safe access on mobile conveyors~~
~~WAC 296-806-42052.~~
~~**PUSHER-BAR CONVEYORS**~~
~~Guard pusher-bar conveyors~~
~~WAC 296-806-42054.~~
~~**ROLLER CONVEYORS**~~
~~Prohibit walking on roller-type conveyors~~
~~WAC 296-806-42056.~~
~~Use speed controls for roller and wheel conveyors~~
~~WAC 296-806-42058.~~
~~Safeguard belt-driven live roller conveyors~~
~~WAC 296-806-42060.~~
~~**SCREW CONVEYORS**~~
~~Guard screw conveyors~~
~~WAC 296-806-42062.~~
~~**SKIP HOISTS**~~
~~Provide slack-cable switches on hoists~~
~~WAC 296-806-42064.~~
~~Block the skip bucket and counterweight guides~~
~~WAC 296-806-42066.~~
~~Protect against wire rope coming off sheaves~~
~~WAC 296-806-42068.~~
~~**SLAT AND ROLLER-SLAT CONVEYORS**~~
~~Safeguard slat and roller-slat conveyors~~
~~WAC 296-806-42070.~~
~~**TOWED CONVEYORS**~~
~~Provide a safe method for disengaging the tow pin~~
~~WAC 296-806-42072.~~

~~Protect employees from moving carts on towed conveyors WAC 296-806-42074.~~
~~Provide clearances and warnings for carts on towed conveyors WAC 296-806-42076.~~
~~Mark projections above the floor WAC 296-806-42078.~~))

You must meet the requirements…	**in this section:**
Follow these requirements for conveyors	WAC 296-806-42002
Provide emergency stops on conveyors	WAC 296-806-42004
Label conveyor controls	WAC 296-806-42006
Prohibit riding on conveyors	WAC 296-806-42008
Provide safe access to conveyors	WAC 296-806-42010
Provide backstop or antirunaway devices to incline, decline, or vertical conveyors	WAC 296-806-42012
Make only safe alterations to conveyors	WAC 296-806-42014
Inspect and replace worn conveyor parts	WAC 296-806-42016
Follow these requirements for replacing conveyor parts	WAC 296-806-42018
Follow these requirements for spill guards	WAC 296-806-42020
Provide pedestrian overpasses for conveyors	WAC 296-806-42022
Guard openings to hoppers and chutes	WAC 296-806-42024
Install guideposts	WAC 296-806-42026

GENERAL REQUIREMENTS FOR CONVEYORS

AMENDATORY SECTION (Amending WSR 04-14-028, filed 6/29/04, effective 1/1/05)

WAC 296-806-42002 Follow these requirements for conveyors. ((~~**You must:**~~

~~•~~)) (1) You must construct, operate, and maintain all conveyors according to this chapter and the American National Standards Institute (ANSI) B20.1-1957.

((~~•~~)) (2) You must make sure all new conveyors constructed after January 1, 2005, meet the requirements of the American Society of Mechanical Engineers (ASME) B20.1-1996.

AMENDATORY SECTION (Amending WSR 04-14-028, filed 6/29/04, effective 1/1/05)

WAC 296-806-42004 Provide emergency stops on conveyors. ((~~**You must:**~~

~~•~~)) (1) You must make sure each conveyor has an emergency stopping device such as an emergency stop button, pull cord, or similar device.

((~~•~~)) (2) You must make sure each emergency stopping device meets **all** of the following requirements. They must:

((~~–~~)) (a) Stop the conveyor a safe distance from the hazard.

((~~–~~)) (b) Be easily identified.

((~~–~~)) (c) Directly control that conveyor.

((~~–~~)) (d) Require a manual reset.

((~~–~~)) (e) NOT be overridden from another location.

((~~–~~)) (f) NOT require other equipment to be stopped in order to stop the conveyor.

((~~•~~)) (3) You must make sure where there is the possibility of an employee falling onto a conveyor, that the emergency stopping device for conveyors feeding or dumping into a hazardous machine such as a barker, saw, hog, or chipper is **at least one** of the following:

((~~–~~)) (a) Under the continuous control of an operator who cannot fall onto the conveyor and has full view of the material entrance; ((~~**OR**~~

~~–~~)) or

(b) Located where it can be reached from a sitting position on the conveyor where it feeds or dumps into the hazardous machine.

AMENDATORY SECTION (Amending WSR 04-14-028, filed 6/29/04, effective 1/1/05)

WAC 296-806-42006 Label conveyor controls. ((~~**You must:**~~

~~•~~)) You must clearly label the function of each conveyor control.

Note: Controls and wiring that are no longer used should be removed from control stations.

AMENDATORY SECTION (Amending WSR 04-14-028, filed 6/29/04, effective 1/1/05)

WAC 296-806-42008 Prohibit riding on conveyors. ((~~**You must:**~~

~~•~~)) You must prohibit employees from riding on conveyors.

((~~Exemption:~~))
EXEMPTION: You do not need to prohibit riding on an assembly conveyor moving eighty feet or less per minute or a conveyor with a station specifically designed for operating personnel.

AMENDATORY SECTION (Amending WSR 04-14-028, filed 6/29/04, effective 1/1/05)

WAC 296-806-42010 Provide safe access to conveyors. ((~~You must:~~
~~•~~)) You must provide a way to safely inspect and maintain conveyors located more than seven feet from the floor.

Reference: Some additional requirements for protecting employees inspecting and maintaining conveyors can be found in:
((•)) 1. Lockout/tagout (control of hazardous energy), chapter 296-803 WAC.
((•)) 2. Personal fall arrest systems, WAC 296-24-88050.

AMENDATORY SECTION (Amending WSR 04-14-028, filed 6/29/04, effective 1/1/05)

WAC 296-806-42012 Provide backstop or antirunaway devices on incline, decline, or vertical conveyors. ((~~You must:~~
~~•~~)) You must make sure all incline, decline, or vertical conveyors use backstop or antirunaway devices when there is a danger of conveyor reversal or runaway.

AMENDATORY SECTION (Amending WSR 04-14-028, filed 6/29/04, effective 1/1/05)

WAC 296-806-42014 Make only safe alterations to conveyors. ((~~You must:~~
~~•~~)) You must make sure, when making conveyor alterations, that you do not affect safety characteristics such as emergency stop controls, guards, or the incline of the conveyor, if such changes would create a danger to workers.

AMENDATORY SECTION (Amending WSR 04-14-028, filed 6/29/04, effective 1/1/05)

WAC 296-806-42016 Inspect and replace worn conveyor parts. ((~~You must:~~
~~•~~)) You must carefully inspect and replace any conveyor part that shows signs of significant wear before it becomes a hazard.

AMENDATORY SECTION (Amending WSR 04-14-028, filed 6/29/04, effective 1/1/05)

WAC 296-806-42018 Follow these requirements for replacing conveyor parts. ((~~You must:~~
~~•~~)) You must make sure replacement conveyor parts are equal to or exceed the manufacturer's specifications.

AMENDATORY SECTION (Amending WSR 04-14-028, filed 6/29/04, effective 1/1/05)

WAC 296-806-42020 Follow these requirements for spill guards. ((~~You must:~~

~~•~~)) You must install protective or spill guards wherever conveyors pass next to or over working areas or passageways. ((–)) These guards must be designed to catch and hold any materials that may become dislodged or fall off.

Reference: For specific requirements when conveyors pass over emergency exit routes, see Exit routes, WAC 296-800-310.

AMENDATORY SECTION (Amending WSR 04-14-028, filed 6/29/04, effective 1/1/05)

WAC 296-806-42022 Provide pedestrian overpasses for conveyors. ((~~You must:~~

~~•~~)) (1) You must provide a pedestrian overpass covering the full width of a passageway if **one** of these conditions exists:

((–)) (a) The working strand of a conveyor crosses within three feet of floor level.

((–)) (b) Workers must step over the strand and trough at or below floor level.

((~~•~~)) (2) You must provide a pedestrian overpass where workers cannot pass under the conveyor safely. ((–)) The sides of the crossing platform must have standard railings if **one** of the following exists:

((■)) (a) The overpass is more than four feet high.

((■)) (b) The conveyor feeds a dangerous machine such as saws, chippers, hogs, or galvanizing tanks.

Reference: For guardrail requirements see, Railing, toeboards, and cover specifications, WAC 296-24-75011.

AMENDATORY SECTION (Amending WSR 04-14-028, filed 6/29/04, effective 1/1/05)

WAC 296-806-42024 Guard openings to hoppers and chutes. ((~~You must:~~

~~•~~)) (1) You must guard all openings to hoppers, chutes, and elevator-type conveyors to prevent workers from:

((–)) (a) Falling or stepping into them.

((–)) (b) Making any kind of bodily contact with conveyors.

Note: Grating provided at floor level with no openings larger than two inches (50 mm) that is strong enough to withstand any load of personnel or trucks that may be imposed upon it is acceptable guarding.

((~~You must:~~

~~•~~)) (2) You must do **all** of the following when dumping operations use chutes or hoppers that are flush with the floor and their use cannot be guarded:

((–)) (a) Place a temporary guardrail around ground or floor-level hoppers when dumping operations are **not** in progress.

((–)) (b) Post warning signs in a conspicuous location alerting personnel to the presence of an open pit in order to protect employees when dumping operations are in progress.

Reference: For guardrail requirements see, Railing, toeboards, and cover specifications, WAC 296-24-75011.

AMENDATORY SECTION (Amending WSR 04-14-028, filed 6/29/04, effective 1/1/05)

WAC 296-806-42026 Install guideposts. ((~~You must:~~ ~~•~~)) You must install guideposts to direct employees driving trucks, loaders, or other equipment to the pit, hopper, or chute.

((~~BELT CONVEYORS~~))

NEW SECTION

WAC 296-806-42027 Belt conveyors.

You must meet the requirements…	in this section:
Guard nip points on belt conveyors	WAC 296-806-42028
Install emergency stop controllers on overland belt conveyors	WAC 296-806-42030
Install belt conveyor overpasses	WAC 296-806-42032

AMENDATORY SECTION (Amending WSR 04-14-028, filed 6/29/04, effective 1/1/05)

WAC 296-806-42028 Guard nip points on belt conveyors.

((~~Exemption:~~)) **EXEMPTION:** This rule does not normally require guards along the conveyor at the point where the belt rides on return rollers, such as return-belt idlers, unless hazardous conditions such as long, tight heavy belts exist.

Return-belt idlers

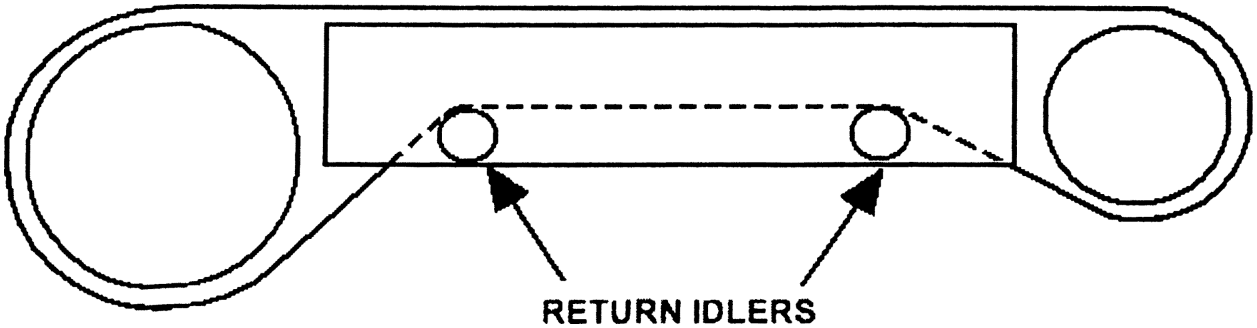

These turn freely and just idle.

((~~You must:~~

~~•~~)) You must place nip point guards at **all** of these points:

((~~–~~)) (1) Where the belt wraps around the pulley.

((~~–~~)) (2) At terminals, take-ups, and snub rollers where the belt changes directions at transfers and deflectors.

((~~–~~)) (3) At the discharge end.

((~~–~~)) (4) At other points where workers may be injured by nip or shear points.

Note: The practice of applying a belt dressing or other foreign material to a rotating drive pulley or a conveyor belt is hazardous and should be avoided.

AMENDATORY SECTION (Amending WSR 04-14-028, filed 6/29/04, effective 1/1/05)

WAC 296-806-42030 Install emergency stop controllers on overland belt conveyors. ((~~You must:~~

~~•~~)) You must install permanent emergency pull cords or similar emergency stop controllers at points where workers are normally stationed along overland belt conveyors.

Note: Personnel that patrol overland belt conveyors may use portable emergency stop controllers instead of permanently installed pull cords and push-button stations.

AMENDATORY SECTION (Amending WSR 04-14-028, filed 6/29/04, effective 1/1/05)

WAC 296-806-42032 Install belt conveyor overpasses. ((~~You must:~~

~~•~~)) You must install a pedestrian overpass or underpass along the sides of long overland belt conveyors, where there is the most foot traffic. ((~~–~~)) The distance between overpasses should not exceed three hundred meters or one thousand feet.

((~~CHAIN CONVEYORS~~))

NEW SECTION

WAC 296-806-42033 Chain converyors.

You must meet the requirements…	in this section:
Safeguard chain conveyors	WAC 296-806-42034
Guard return strands on chain conveyors	WAC 296-806-42036
Guard chain conveyors that are used as a transfer mechanism	WAC 296-806-42038

AMENDATORY SECTION (Amending WSR 04-14-028, filed 6/29/04, effective 1/1/05)

WAC 296-806-42034 Safeguard chain conveyors. ((~~You must:~~
~~•~~)) You must provide safeguards for drive, tail, and idler sprocket pulleys where the chain creates a nip or shear point.

AMENDATORY SECTION (Amending WSR 04-14-028, filed 6/29/04, effective 1/1/05)

WAC 296-806-42036 Guard return strands on chain conveyors. ((~~You must:~~
~~•~~)) (1) You must provide a way to catch and support the ends of a chain that break over a passageway.

((~~•~~)) (2) You must provide a strong enough trough to carry the weight from a broken chain on conveyors when return strands operate within seven feet of the floor.

AMENDATORY SECTION (Amending WSR 04-14-028, filed 6/29/04, effective 1/1/05)

WAC 296-806-42038 Guard chain conveyors that are used as a transfer mechanism. ((~~You must:~~
~~•~~)) You must guard chain conveyors whose moving chains cannot be enclosed without impairing their function by **one** of the following methods:

((–)) (1) Distance as required in, Make sure safeguarding by distance meets these requirements, WAC 296-806-20056.

((–)) (2) Personnel barriers.

((–)) (3) Warning signs where personnel barriers are not practical.

Note: Chain conveyors with moving chains that cannot be enclosed include those:
((•)) 1. Mounted within another conveyor.
((•)) 2. Raised and lowered as a transfer mechanism.

((~~ELEVATOR CONVEYORS~~))

NEW SECTION

WAC 296-806-42039 Elevator conveyors.

You must meet the requirements…	in this section:
Prevent material from falling off of elevator conveyors	WAC 296-806-42040

AMENDATORY SECTION (Amending WSR 04-14-028, filed 6/29/04, effective 1/1/05)

WAC 296-806-42040 Prevent material from falling off of elevator conveyors. ((~~You must:~~

~~•~~)) (1) You must install strong guards, screens, or barricades to prevent material from falling in any direction into the shaft way of elevator-type conveyors, except at loading and unloading areas.

((~~•~~)) (2) You must install automatic shaft way gates or suitable barriers at each floor level where material is loaded or unloaded.

((~~INCLINED RECIPROCATING CONVEYORS (SHAKERS)~~))

NEW SECTION

WAC 296-806-42041 Inclined reciprocating conveyors (shakers).

You must meet the requirements…	in this section:
Provide protection where employees must load shakers	WAC 296-806-42042
Provide grating over silo and bunker openings for shuttle conveyors	WAC 296-806-42044

AMENDATORY SECTION (Amending WSR 04-14-028, filed 6/29/04, effective 1/1/05)

WAC 296-806-42042 Provide protection where employees must load shakers. ((~~You must:~~

~~•~~)) (1) You must provide standard guardrails or snap chains along loading sides of the shaker where personnel must load or unload material. ((–)) Snap chains must be at least thirty-nine inches high at their lowest point.

((~~•~~)) (2) You must make sure controls are located so the conveyor cannot be started by an employee on the moving part of the conveyor.

AMENDATORY SECTION (Amending WSR 04-14-028, filed 6/29/04, effective 1/1/05)

WAC 296-806-42044 Provide grating over silo and bunker openings for shuttle conveyors. ((~~You must:~~

~~•~~)) You must provide grating with openings to match the size of the material being discharged into silos or bunkers. Make sure openings are:

((–)) (1) Small enough so that workers cannot fall through.

((–)) (2) Protected by other effective means if the material size requires openings large enough for a worker to fall through.

((~~MOBILE CONVEYORS~~))

NEW SECTION

WAC 296-806-42045 Mobile conveyors.

You must meet the requirements…	in this section:
Guard wheels and rails on mobile conveyors	WAC 296-806-42046
Prevent hazardous motion on mobile conveyors	WAC 296-806-42048
Provide a detector for mobile conveyors	WAC 296-806-42050
Provide safe access on mobile conveyors	WAC 296-806-42052

AMENDATORY SECTION (Amending WSR 04-14-028, filed 6/29/04, effective 1/1/05)

WAC 296-806-42046 Guard wheels and rails on mobile conveyors. ((~~You must:~~

~~•~~)) You must install sweeps in front of the nip points created by the wheels and rails to deflect objects that could derail the conveyor.

AMENDATORY SECTION (Amending WSR 04-14-028, filed 6/29/04, effective 1/1/05)

WAC 296-806-42048 Prevent hazardous motion on mobile conveyors. ((~~You must:~~

~~•~~)) (1) You must make sure mobile conveyors have **at least one** of the following to prevent hazardous motion:

((~~–~~)) (a) Brakes.

((~~–~~)) (b) Rail clamps.

((~~–~~)) (c) Other position-locking devices.

((~~•~~)) (2) You must provide limit switches that will stop travel when exceeding the design limits of rail-mounted mobile conveyors.

((~~•~~)) (3) You must provide rail stops to keep the conveyor from traveling past its designed end location.

AMENDATORY SECTION (Amending WSR 04-14-028, filed 6/29/04, effective 1/1/05)

WAC 296-806-42050 Provide a detector for mobile conveyors. ((~~You must:~~

~~•~~)) You must provide a detector to stop conveyor movement when the operation creates a danger of running into a stockpile or other obstacle.

AMENDATORY SECTION (Amending WSR 04-14-028, filed 6/29/04, effective 1/1/05)

WAC 296-806-42052 Provide safe access on mobile conveyors. ((~~You must:~~

~~•~~)) You must make sure that access stairways, ladders, and platforms are designed and located to avoid the shear or nip point hazards of the conveyor and moving machinery.

((~~PUSHER-BAR CONVEYORS~~))

NEW SECTION

WAC 296-806-42053 Push-bar conveyors.

You must meet the requirements…	in this section:
Guard pusher-bar conveyors	WAC 296-806-42054

AMENDATORY SECTION (Amending WSR 04-14-028, filed 6/29/04, effective 1/1/05)

WAC 296-806-42054 Guard pusher-bar conveyors. ((~~You must:~~

~~•~~)) You must provide a guard when hazards exist at each of these points:

((~~–~~)) (1) At the discharge point where the bar passes through the bed.

((~~–~~)) (2) Where there is a shear point between the return pusher bar and a frame member.

((~~ROLLER CONVEYORS~~))

NEW SECTION

WAC 296-806-42055 Roller conveyors.

You must meet the requirements…	in this section:
Prohibit walking on roller-type conveyors	WAC 296-806-42056
Use speed controls for roller and wheel conveyors	WAC 296-806-42058
Safeguard belt-driven live roller conveyors	WAC 296-806-42060

AMENDATORY SECTION (Amending WSR 04-14-028, filed 6/29/04, effective 1/1/05)

WAC 296-806-42056 Prohibit walking on roller-type conveyors. ((~~You must:~~

~~•~~)) You must prohibit employees from walking on the rolls of roller-type conveyors. ((–)) Tread plates or other types of walkways can be used between the rollers as a walking surface for operators when performing their duties.

AMENDATORY SECTION (Amending WSR 04-14-028, filed 6/29/04, effective 1/1/05)

WAC 296-806-42058 Use speed controls for roller and wheel conveyors. ((~~You must:~~

~~•~~)) (1) You must avoid safety hazards created by unit or package speeds by **one** of the following methods:

((–)) (a) Limiting the length of the sloped run.

((–)) (b) Using speed retarders or brakes.

((–)) (c) Other means of providing speed control.

((~~•~~)) (2) You must make sure rollers and wheels are free running to prevent locked wheels from steering or pulling materials to one side or off the conveyor.

AMENDATORY SECTION (Amending WSR 04-14-028, filed 6/29/04, effective 1/1/05)

WAC 296-806-42060 Safeguard belt-driven live roller conveyors. ((~~You must:~~

~~•~~)) You must guard belt and roller nip points by **one** of the following methods:

((–)) (1) Space load-carrying rollers to prevent access to the belt and roller nip points.

((–)) (2) Insert rods or plates between the rollers to prevent access to the belt and roller nip points.

((–)) (3) Use rollers that pop out when something contacts the nip point.

((–)) (4) Distance safeguarding found in: ((■)) Make sure safeguarding by distance meets these requirements, WAC 296-806-20056.

Reference: For nip points and sheer hazards on power-driven (live) roller conveyors see, Guard nip points on belt conveyors, WAC 296-806-42028.

((~~SCREW CONVEYORS~~))

NEW SECTION

WAC 296-806-42061 Screw conveyors.

You must meet the requirements…	in this section:
Guard screw conveyors	WAC 296-806-42062

AMENDATORY SECTION (Amending WSR 04-14-028, filed 6/29/04, effective 1/1/05)

WAC 296-806-42062 Guard screw conveyors. ((~~You must:~~

~~•~~)) (1) You must enclose the rotating screw to prevent contact with the shear points where it passes the sides of the trough or casing.

((~~•~~)) (2) You must guard screw conveyors requiring an open housing by using **one** of the following:

((–)) (a) Make sure safeguarding by distance meets these requirements, WAC 296-806-20056.

((–)) (b) Make sure guardrails used for safeguarding meet these requirements, WAC 296-806-20058.

((~~•~~)) (3) You must construct feed openings for shovel, front-end loader, or other manual or mechanical equipment so that the conveyor screw is covered by a grating. ((–)) If the nature of the material is such that a grating cannot be used, then the exposed section of the conveyor must be guarded by a railing and warning signs.

((~~SKIP HOISTS~~))

NEW SECTION

WAC 296-806-42063 Skip hoists.

You must meet the requirements…	in this section:
Provide slack-cable switches on hoists	WAC 296-806-42064
Block the skip bucket and counterweight guides	WAC 296-806-42066
Protect against wire rope coming off sheaves	WAC 296-806-42068

AMENDATORY SECTION (Amending WSR 04-14-028, filed 6/29/04, effective 1/1/05)

WAC 296-806-42064 Provide slack-cable switches on hoists. ((~~You must:~~

~~•~~)) You must provide and arrange slack cable switches to cut power to the drive and set the brake when the skip or counterweight hoisting ropes either:

((~~–~~)) (1) Develop slack; ((~~OR~~

~~–~~)) or

(2) Lose tension due to sticking in the guides, over travel, or for any other reason.

AMENDATORY SECTION (Amending WSR 04-14-028, filed 6/29/04, effective 1/1/05)

WAC 296-806-42066 Block the skip bucket and counterweight guides. ((~~You must:~~

~~•~~)) You must make sure the skip bucket and counterweight are blocked in their guides when the brake or any part of the drive train between the brake and the drum shaft are being repaired or replaced.

AMENDATORY SECTION (Amending WSR 04-14-028, filed 6/29/04, effective 1/1/05)

WAC 296-806-42068 Protect against wire rope coming off sheaves. ((~~You must:~~

~~•~~)) You must fit all sheaves with sheave guards to prevent the wire rope from coming off under slack cable or similar conditions.

((~~SLAT AND ROLLER-SLAT CONVEYORS~~))

NEW SECTION

WAC 296-806-42069 Slat and roller-slat conveyors.

You must meet the requirements…	**in this section:**
Safeguard slat and roller-slat conveyors	WAC 296-806-42070

AMENDATORY SECTION (Amending WSR 04-14-028, filed 6/29/04, effective 1/1/05)

WAC 296-806-42070 Safeguard slat and roller-slat conveyors. ((~~You must:~~

~~•~~)) (1) You must provide **either** of these safeguards at the tail end of a slat conveyor if the slats are above the centerline of the chain:

((–)) (a) A guard over the hazardous tail end; ((~~OR~~

–)) or

(b) Warning signs if guards are impractical because of material flowing over the tail sprocket.

((~~•~~)) (2) You must provide **either** of these safeguards when there is a gap between the slats wide enough to permit access to cross members below the slats:

((–)) (a) A continuous pan under the slats; ((~~OR~~

–)) or

(b) Keep all cross members a safe distance from the slats.

((~~TOWED CONVEYORS~~))

NEW SECTION

WAC 296-806-42071 Towed conveyors.

You must meet the requirements…	in this section:
Provide a safe method for disengaging the tow pin	WAC 296-806-42072
Protect employees from moving carts on towed conveyors	WAC 296-806-42074
Provide clearances and warnings for carts on towed conveyors	WAC 296-806-42076
Mark projections above the floor	WAC 296-806-42078

AMENDATORY SECTION (Amending WSR 04-14-028, filed 6/29/04, effective 1/1/05)

WAC 296-806-42072 Provide a safe method for disengaging the tow pin. ((~~You must:~~

~~•~~)) You must provide a method for the operator to disengage the tow pin from a conveyor pusher without being in front of the cart.

AMENDATORY SECTION (Amending WSR 04-14-028, filed 6/29/04, effective 1/1/05)

WAC 296-806-42074 Protect employees from moving carts on towed conveyors. ((~~You must:~~

~~•~~)) (1) You must make sure runaway carts are unable to exit ramps and enter work areas.

((~~•~~)) (2) You must have a barrier of sufficient strength and height on ramps with pedestrian or traffic aisles to prevent a runaway cart from entering the aisle.

((~~•~~)) (3) You must have signs warning employees not to enter ramps that do not have pedestrian or traffic aisles.

AMENDATORY SECTION (Amending WSR 04-14-028, filed 6/29/04, effective 1/1/05)

WAC 296-806-42076 Provide clearances and warnings for carts on towed conveyors. ((~~You must:~~

~~•~~)) (1) You must provide clearance space for personnel in **all** of the following:

((~~–~~)) (a) Between the sides of carts.

((~~–~~)) (b) Between any load overhanging the side of a cart.

((~~–~~)) (c) Any fixed or moving object.

((~~•~~)) (2) You must identify the cart path with floor stripes that are:

((~~–~~)) (a) Parallel to the cart path.

((~~–~~)) (b) Arranged so one line is on each side of the path.

((~~–~~)) (c) Located a safe distance from the edge of the cart or overhanging load.

((~~•~~)) (3) You must mark reduced clearance areas with appropriate warning signs.

Note: An example of a reduced clearance area is an area where a cart goes through a wall opening.

((~~You must:~~

~~•~~)) (4) You must place an appropriate warning on those areas where a cart may unexpectedly change direction, such as switching off the main line into a transfer conveyor or a spur.

Note: An example of an appropriate warning would be to use diagonal stripes on the floor between clearance lines.

((~~You must:~~

~~•~~)) (5) You must install a sign, signal, or other warning where carts start automatically.

AMENDATORY SECTION (Amending WSR 04-14-028, filed 6/29/04, effective 1/1/05)

WAC 296-806-42078 Mark projections above the floor. ((~~You must:~~

~~•~~)) You must mark the area around projections above the floor with appropriate diagonal stripes, warning signs, or both.

Note: This is especially important if projections above the floor are unpredictable or occur intermittently.

((~~FOOD PROCESSING EQUIPMENT~~))

AMENDATORY SECTION (Amending WSR 04-14-028, filed 6/29/04, effective 1/1/05)

WAC 296-806-425 ((~~Summary.~~)) Food processing equipment. Summary

If your specific food processing machine or operation is not listed here, then follow any facilities requirements in this section along with the "Requirements for all machines" found in this chapter, WAC 296-806-200 and 296-806-300.

This section applies to:

((~~•~~)) (1) All businesses that manufacture or process food, whether or not they are contained inside food stores; ((~~AND~~

~~•~~)) and

(2) The design, installation, operations, and maintenance of machinery and equipment used in the food processing industry.

Your responsibility:

To protect employees from hazards associated with food processing facilities and machines.

((~~**You must:**~~))

~~**FACILITIES**~~

((~~Provide locks on chamber doors of large air conditioning units~~
~~WAC 296-806-42502.~~
~~Use proper door locks on rack-type bread coolers~~
~~WAC 296-806-42504.~~
~~Provide see-through panels on fermentation room doors~~
~~WAC 296-806-42506.~~
~~Cover exposed hot pipes~~
~~WAC 296-806-42508.~~
~~Provide extension piping on stationary lubrication fittings~~
~~WAC 296-806-42510.~~
~~Provide hoods for pan-washing tanks~~
~~WAC 296-806-42512.~~
~~Safeguard proof boxes~~
~~WAC 296-806-42514.~~
~~Safeguard storage bins~~
~~WAC 296-806-42516.~~

~~**MATERIAL HANDLING**~~

~~Follow these design requirements for bag lifts (bag arm elevators) and chutes~~
~~WAC 296-806-42518.~~
~~Follow these requirements for chain tackle~~
~~WAC 296-806-42520.~~
~~Safeguard conveyors~~
~~WAC 296-806-42522.~~
~~Use properly designed covers for screw conveyors (augers)~~
~~WAC 296-806-42524.~~
~~Safeguard pallet jacks and hand trucks~~
~~WAC 296-806-42526.~~

~~**SPECIFIC FOOD PROCESSING EQUIPMENT**~~

~~Safeguard bakery slicers~~
~~WAC 296-806-42528.~~
~~Safeguard bakery wrapping machines~~
~~WAC 296-806-42530.~~
~~Provide troughs with antifriction-bearing casters~~
~~WAC 296-806-42532.~~
~~Follow these requirements for trough hoists and similar equipment~~
~~WAC 296-806-42534.~~
~~Follow these requirements for dividers~~
~~WAC 296-806-42536.~~
~~Safeguard manually-fed dough and cross-roll brakes~~
~~WAC 296-806-42538.~~
~~Provide a guard or tripping device on reversible dough brakes~~

~~WAC 296-806-42540.~~
~~Follow these requirements for doughnut machines~~
~~WAC 296-806-42542.~~
~~Follow these requirements for dumpbins and blenders~~
~~WAC 296-806-42544.~~
~~Follow these requirements for flour-handling machines~~
~~WAC 296-806-42546.~~
~~Follow these requirements for traveling or track-type flour scales~~
~~WAC 296-806-42548.~~
~~Follow these requirements for food grinders and cutters~~
~~WAC 296-806-42550.~~
~~Provide covers with interlocks on ingredient premixers, emulsifiers, and similar machines~~
~~WAC 296-806-42552.~~
~~Follow these requirements for open fat kettles~~
~~WAC 296-806-42554.~~
~~Follow these requirements for steam kettles~~
~~WAC 296-806-42556.~~
~~Follow these requirements for chocolate melting, refining, and mixing kettles~~
~~WAC 296-806-42558.~~
~~Safeguard meat-processing equipment (circular meat-cutting saws)~~
~~WAC 296-806-42560.~~
~~Follow these requirements for horizontal dough mixers~~
~~WAC 296-806-42562.~~
~~Follow these requirements for vertical mixers~~
~~WAC 296-806-42564.~~
~~Follow these requirements for mechanical-feed moulders~~
~~WAC 296-806-42566.~~
~~Follow these requirements for hand-fed moulders~~
~~WAC 296-806-42568.~~
~~Design, install, and construct your ovens according to these requirements~~
~~WAC 296-806-42570.~~
~~Properly locate emergency "stop" buttons and main shut off valves for ovens~~
~~WAC 296-806-42572.~~
~~Inspect and test safety devices on ovens~~
~~WAC 296-806-42574.~~
~~Follow these requirements for peanut-cooling trucks~~
~~WAC 296-806-42576.~~
~~Follow these requirements for pretzel-rolling, pretzel-stick extruding, rotary, and die machines~~
~~WAC 296-806-42578.~~
~~Safeguard box and roll-type dough sheeters~~
~~WAC 296-806-42580.~~
~~Provide proper enclosures for sifters~~
~~WAC 296-806-42582.~~
~~Follow these requirements for sugar and spice pulverizers~~
~~WAC 296-806-42584.~~))

You must meet the requirements…	**in this section:**
Provide locks on chamber doors of large air conditioning units	WAC 296-806-42502

You must meet the requirements…	**in this section:**
Use proper door locks on rack-type bread coolers	WAC 296-806-42504
Provide see-through panels on fermentation room doors	WAC 296-806-42506
Cover exposed hot pipes	WAC 296-806-42508
Provide extension piping on stationary lubrication fittings	WAC 296-806-42510
Provide hoods for pan-washing tanks	WAC 296-806-42512
Safeguard proof boxes	WAC 296-806-42514
Safeguard storage bins	WAC 296-806-42016

((~~FACILITIES~~))

AMENDATORY SECTION (Amending WSR 04-14-028, filed 6/29/04, effective 1/1/05)

WAC 296-806-42502 Provide locks on chamber doors of large air conditioning units. ((~~You must:~~

~~•~~)) You must make sure all door locks on air conditioning unit chambers, that are large enough for employees to enter, can be operated from both inside and outside the chamber.

AMENDATORY SECTION (Amending WSR 04-14-028, filed 6/29/04, effective 1/1/05)

WAC 296-806-42504 Use proper door locks on rack-type bread coolers. ((~~You must:~~

~~•~~)) You must make sure all door locks can be operated from both inside and outside the bread cooler.

AMENDATORY SECTION (Amending WSR 04-14-028, filed 6/29/04, effective 1/1/05)

WAC 296-806-42506 Provide see-through panels on fermentation room doors. ((~~You must:~~

~~•~~)) You must provide shatterproof, see-through panels, made of wire glass or plastic, on fermentation room doors.

AMENDATORY SECTION (Amending WSR 04-14-028, filed 6/29/04, effective 1/1/05)

WAC 296-806-42508 Cover exposed hot pipes. ((~~You must:~~
~~•~~)) You must cover exposed hot (160°F or more) water and steam pipes with insulating material wherever necessary to prevent employee contact.

AMENDATORY SECTION (Amending WSR 04-14-028, filed 6/29/04, effective 1/1/05)

WAC 296-806-42510 Provide extension piping on stationary lubrication fittings. ((~~You must:~~
~~•~~)) You must provide extension piping on stationary lubrication fittings to prevent workers from reaching into the hazardous area when lubricating moving machinery.

AMENDATORY SECTION (Amending WSR 04-14-028, filed 6/29/04, effective 1/1/05)

WAC 296-806-42512 Provide hoods for pan-washing tanks.

((~~Exemption:~~)) **EXEMPTION:** This requirement does not apply to dishwashers or sanitizers used in restaurants or retail establishments.

((~~You must:~~
~~•~~)) You must provide power-ventilated exhaust hoods over the tank.

AMENDATORY SECTION (Amending WSR 04-14-028, filed 6/29/04, effective 1/1/05)

WAC 296-806-42514 Safeguard proof boxes. ((~~You must:~~))

(1) You must make sure all door locks can be operated from both inside and outside the proof box.

(2) You must provide guide rails to center the racks as they enter, pass through, and leave the proof box if pans, boards, or trays may be easily dislodged.

Note: Guide rails are not required in proof boxes unless there are two doors with a pass through or pull through design.

AMENDATORY SECTION (Amending WSR 07-03-163, filed 1/24/07, effective 4/1/07)

WAC 296-806-42516 Safeguard storage bins.

((~~Exemption:~~)) This requirement does not apply to under-the-counter ingredient bins found in retail stores.
EXEMPTION:

((~~You must:~~))

(1) You must provide locks or latches to keep storage bin covers closed, and gaskets or other equivalent devices, to make sure covers are dust tight.

(2) You must make sure employees lock covers in the open position when entering bins. ((~~•~~)) Covers for bins that employees may enter must have a metal fastener (hasp) and lock that can be locked in the "open" position.

(3) You must provide a standard stationary safety ladder on the inside and outside of storage bins with sides more than five feet deep.

((~~•~~)) (a) The ends of ladders must be kept away from moving screw conveyors.

((~~•~~)) (b) Outside ladders must reach from floor level to the top of the bin.

((~~•~~)) (c) Inside ladders must reach from the top of the bin to the bottom of the bin.

(4) You must provide an electric interlock on the main entrance cover of large storage bins near the interior exit ladder. ((~~•~~)) The interlock needs to prevent feed and unloading screw motors from operating while the cover is open.

Reference: You may need to follow other requirements found in chapter 296-809 WAC, Confined spaces.

((~~MATERIAL HANDLING~~))

NEW SECTION

WAC 296-806-42517 Material handling.

You must meet the requirements…	in this section:
Follow these design requirements for bag lifts (bag arm elevators) and chutes	WAC 296-806-42518
Follow these requirements for chain tackle	WAC 296-806-42520
Safeguard conveyors	WAC 296-806-42522
Use properly designed covers for screw conveyors (augers)	WAC 296-806-42524

You must meet the requirements…	in this section:
Safeguard pallet jacks and hand trucks	WAC 296-806-42526

AMENDATORY SECTION (Amending WSR 04-14-028, filed 6/29/04, effective 1/1/05)

WAC 296-806-42518 Follow these design requirements for bag lifts (bag arm elevators) and chutes. ((~~You must:~~))

(1) You must make sure bag arm elevators with manual takeoff are designed to include:

((~~•~~)) (a) Maximum operating capacity of seven bags per minute.

((~~•~~)) (b) Spacing of arms on the conveyor chain to obtain the full capacity of the elevator with the lowest possible chain speed.

((~~•~~)) (c) An electric limit switch at the unloading end that automatically stops the conveyor chain if any bag does not clear the conveyor arms.

(2) You must make sure bag chutes (gravity chutes for handling flour bags) that incline more than thirty degrees from horizontal:

((~~•~~)) (a) Are designed to keep the speed of flour bags as low as possible.

((~~•~~)) (b) Provide an upturn at the lower end of the chute to slow down the bags.

(3) You must prohibit the use of bag or barrel lifts as personnel lifts.

(4) You must prohibit manlifts in bakeries.

((~~**Definition:**~~

~~**Manlift**~~

~~A device consisting of a power driven endless belt moving in one direction only, and provided with steps or platforms and handholds attached to it for the transportation of personnel from floor to floor.~~))

AMENDATORY SECTION (Amending WSR 04-14-028, filed 6/29/04, effective 1/1/05)

WAC 296-806-42520 Follow these requirements for chain tackle. ((~~You must:~~))

(1) You must mark all chain tackle with the maximum load capacity so the marking is:

((~~•~~)) (a) Prominently displayed.

((~~•~~)) (b) Legible.

((~~•~~)) (c) Permanent.

(2) You must mark all chain tackle with minimum support specifications so the marking is legible and permanent.

(3) You must use safety hooks with chain tackle.

AMENDATORY SECTION (Amending WSR 04-14-028, filed 6/29/04, effective 1/1/05)

WAC 296-806-42522 Safeguard conveyors. ((~~You must:~~))

(1) You must install stop bumpers on all delivery ends of conveyors when products are manually removed.

(2) You must make sure all conveyors have "stop" buttons at **all** operating stations.

(3) You must provide emergency stop bars or switches at any point where both of these exist:

((~~•~~)) (a) The conveyor feeds into a machine; ((~~AND~~

~~•~~)) and

(b) Pinch points or catching hazards exist.

Reference: Additional requirements for conveyors are found in WAC 296-806-420.

AMENDATORY SECTION (Amending WSR 04-14-028, filed 6/29/04, effective 1/1/05)

WAC 296-806-42524 Use properly designed covers for screw conveyors (augers).

((~~Exemption:~~)) EXEMPTION: This requirement does not apply to screw conveyors where there are drop or hinged bottom sections that cannot remain airtight.

((~~You must:~~

~~•~~)) You must design covers for screw conveyors that are:

((~~–~~)) (1) Removable in convenient sections.

((~~–~~)) (2) Held in place with stationary clamps. ((■)) Locate stationary clamps at intervals that will keep all covers dust tight.

AMENDATORY SECTION (Amending WSR 04-14-028, filed 6/29/04, effective 1/1/05)

WAC 296-806-42526 Safeguard pallet jacks and hand trucks. ((~~You must:~~))

(1) You must make sure motorized and nonmotorized pallet jacks have a lock or other device that holds the handle in the vertical position when the hand truck is not in use.

(2) You must make sure hand truck casters are set back from corners((~~:~~

~~•~~)). Locate them back from corners so they do not present a hazard to employee's toes and heels, but not close enough to cause the hand truck to become unstable.

Reference: Motorized hand trucks (pallet jacks) are classified as powered industrial trucks. Additional requirements for powered industrial trucks are found in chapter 296-863 WAC.

((~~SPECIFIC FOOD PROCESSING EQUIPMENT~~))

NEW SECTION

WAC 296-806-42527 Specific food processing equipment.

You must meet the requirements…	in this section:
Safeguard bakery slicers	WAC 296-806-42528
Safeguard bakery wrapping machines	WAC 296-806-42530
Provide troughs with antifriction-bearing casters	WAC 296-806-42532
Follow these requirements for trough hoists and similar equipment	WAC 296-806-42534
Follow these requirements for dividers	WAC 296-806-42536
Safeguard manually-fed dough and cross-roll brakes	WAC 296-806-42538
Provide a guard or tripping device on reversible dough brakes	WAC 296-806-42540
Follow these requirements for doughnut machines	WAC 296-806-42542
Follow these requirements for dumpbins and blenders	WAC 296-806-42544
Follow these requirements for flour-handling machines	WAC 296-806-42546
Follow these requirements for traveling or track-type flour scales	WAC 296-806-42548
Follow these requirements for food grinders and cutters	WAC 296-806-42550
Provide covers with interlocks on ingredient premixers, emulsifiers, and similar machines	WAC 296-806-42552
Follow these requirements for open fat kettles	WAC 296-806-42554
Follow these requirements for steam kettles	WAC 296-806-42556
Follow these requirements for chocolate melting, refining, and mixing kettles	WAC 296-806-42558

You must meet the requirements…	in this section:
Safeguard meat-processing equipment (circular meat-cutting saws)	WAC 296-806-42560
Follow these requirements for horizontal dough mixers	WAC 296-806-42562
Follow these requirements for vertical mixers	WAC 296-806-42564
Follow these requirements for mechanical-feed moulders	WAC 296-806-42566
Follow these requirements for hand-fed moulders	WAC 296-806-42568
Design, install, and construct your ovens according to these requirements	WAC 296-806-42570
Properly locate emergency "stop" buttons and main shut off valves for ovens	WAC 296-806-42572
Inspect and test safety devices on ovens	WAC296-806-42574
Follow these requirements for peanut-cooling trucks	WAC 296-806-42576
Follow these requirements for pretzel-rolling, pretzel-stick extruding, rotary, and die machines	WAC 296-806-42578
Safeguard box and roll-type dough sheeters	WAC 296-806-42580
Provide proper enclosures for sifters	WAC 296-806-42582
Follow these requirements for sugar and spice pulverizers	WAC 296-806-42584

AMENDATORY SECTION (Amending WSR 04-14-028, filed 6/29/04, effective 1/1/05)

WAC 296-806-42528 Safeguard bakery slicers. ((~~You must:~~))

(1) You must provide all slicers with a mechanical device to push the last loaf through the slicer knives.

(2) You must equip all slicers with an interlock to deenergize the motor whenever a door, panel, or other point of access to the cutting blades is open.

(3) You must protect employees sharpening blades by installing a barrier guard that provides an opening large enough for the sharpening stone to reach and sharpen slicer blades.

(4) You must provide automatic braking to stop slicers with endless band knives when the motor is not energized.

AMENDATORY SECTION (Amending WSR 04-14-028, filed 6/29/04, effective 1/1/05)

WAC 296-806-42530 Safeguard bakery wrapping machines. ((~~You must:~~))

(1) You must extend or locate mechanical control levers that start and stop slicing machine conveyors and wrapping machines so an operator can control both machines from either location.

Note: ((•)) 1. The levers should be provided wherever necessary, but arranged so only one station can start the wrapping machine and conveyor assembly.
((–)) Set up or guard controls to prevent accidental starting.
((•)) 2. The electronic control station for starting and stopping the electric motor that drives the wrapping machine and conveyor should be near the clutch-starting lever.

((~~You must:~~))

(2) You must provide a protective cover plate over electric heaters on bakery wrapping machines. ((~~•~~)) The cover plate must be properly separated or insulated from heaters so the plate itself is not a burn hazard to operators.

AMENDATORY SECTION (Amending WSR 04-14-028, filed 6/29/04, effective 1/1/05)

WAC 296-806-42532 Provide troughs with antifriction-bearing casters. ((~~You must:~~

~~•~~)) You must provide antifriction-bearing casters on troughs so operators can move and direct them with minimal effort.

AMENDATORY SECTION (Amending WSR 04-14-028, filed 6/29/04, effective 1/1/05)

WAC 296-806-42534 Follow these requirements for trough hoists and similar equipment. ((~~You must:~~))

(1) You must mark all hoists and similar equipment with the maximum loading capacity so the marking is:

((~~•~~)) (a) Prominently displayed.

((~~•~~)) (b) Legible.

((~~•~~)) (c) Permanent.

(2) You must mark all hoists with minimum support specifications so that the marking is legible and permanent.

(3) You must provide safety catches for the chain so that it will hold the load in any position.

(4) You must use safety hooks with hoists.

AMENDATORY SECTION (Amending WSR 04-14-028, filed 6/29/04, effective 1/1/05)

WAC 296-806-42536 Follow these requirements for dividers. ((~~You must:~~

~~•~~)) You must enclose or safeguard the moving parts in the back of the divider with **all** of the following:

((–)) (1) A complete cover to enclose **all** moving parts OR an enclosure or guard for each individual part to remove separate hazards.

((–)) (2) A limit switch to shut off the machine when the rear cover is open.

((–)) (3) A hinged guard on the back that cannot be completely removed.

((■)) (4) You must make sure that, if a catch or brace is provided for holding the cover open, make sure it will not release due to vibrations or minor bumping, causing the cover to drop on an employee.

Note: Dividers as discussed in this section utilize pistons, knives and blades to cut and divide large quantities of dough. This does not apply to small vibrating or oscillating rounders.

AMENDATORY SECTION (Amending WSR 04-14-028, filed 6/29/04, effective 1/1/05)

WAC 296-806-42538 Safeguard manually-fed dough and cross-roll brakes. ((~~**You must:**~~))

(1) You must guard the top roll with a heavy-gage metal shield that extends over the roll to within six inches of the hopper bottom board.

Note: The shield may be perforated to allow observation of the dough entering the rolls.

((~~**You must:**~~))

(2) You must provide an emergency "stop" bar that includes a self-engaging brake.

((~~•~~)) (a) Locate it so that if the operator falls forward or gets their hands caught in the rolls, their body will press against the bar, causing the rolls to stop instantly by opening the circuit to:

((–)) (i) Deenergize the drive motor.

((–)) (ii) Activate a spring-set magnetic brake.

((~~•~~)) (b) Activate the emergency "stop" bar before each shift to make sure it is functioning properly.

AMENDATORY SECTION (Amending WSR 04-14-028, filed 6/29/04, effective 1/1/05)

WAC 296-806-42540 Provide a guard or tripping device on reversible dough brakes. ((~~**You must:**~~

~~•~~)) You must provide a guard or tripping device on each side of the rolls of reversible dough brakes. ((–)) The guard or device must be designed so that it stops the machine or reverses the direction of the rolls, if moved by the operator.

AMENDATORY SECTION (Amending WSR 04-14-028, filed 6/29/04, effective 1/1/05)

WAC 296-806-42542 Follow these requirements for doughnut machines. ((~~You must:~~

~~•~~)) You must provide separate flues for venting both of the following:

((–)) (1) Vapors from the frying section; ((~~AND~~

–)) and

(2) Products of combustion from the combustion chamber used to heat the fat.

AMENDATORY SECTION (Amending WSR 04-14-028, filed 6/29/04, effective 1/1/05)

WAC 296-806-42544 Follow these requirements for dumpbins and blenders. ((~~**Definition:**~~

~~**Dumpbin and blender**~~

~~The part of the flour handling system where the containers of flour are emptied.~~

~~**You must:**~~))

(1) You must make sure dumpbin and blender hoods are large enough to prevent circulation of flour dust outside the hoods.

(2) You must provide a stop control device for dumpbins and blenders located close to the operator's work station.

(3) You must position dumpbins at an appropriate height from the floor so that operators can dump flour from bags without excessive strain or fatigue.

(4) You must provide a bag rest stop, when the edge of a dumpbin is more than twenty-four inches above the floor.

AMENDATORY SECTION (Amending WSR 04-14-028, filed 6/29/04, effective 1/1/05)

WAC 296-806-42546 Follow these requirements for flour-handling machines. ((~~You must:~~

~~•~~)) You must make sure the following safeguards are used when flour-handling systems are run in electrical unity with one another:

((–)) (1) When the beginning of the system is located far from its final delivery end, make sure:

((■)) (a) All electric motors operating the system have one control at each end; ((~~AND~~

■)) and

(b) Either control will stop all motors.

((–)) (2) Arrange control circuits for magnetic controllers so opening **any** limit switch on an individual unit will deenergize **all** motors on that unit.

AMENDATORY SECTION (Amending WSR 04-14-028, filed 6/29/04, effective 1/1/05)

WAC 296-806-42548 Follow these requirements for traveling or track-type flour scales. ((~~You must:~~

~~•~~)) (1) You must provide bar handles for the moving of traveling or track-type flour scales.

Note: For easier grip, the bar should be at least one inch in diameter.

((~~You must:~~

~~•~~)) (2) You must guard trolley track wheels.

AMENDATORY SECTION (Amending WSR 04-14-028, filed 6/29/04, effective 1/1/05)

WAC 296-806-42550 Follow these requirements for food grinders and cutters. ((~~You must:~~

~~•~~)) You must make sure that food grinders and cutters:

((~~–~~)) (1) Have an interlock so machines with ((~~removeable~~)) removable hoppers cannot be operated when the hopper is removed((~~:~~)).

((~~–~~)) (2) Limit access to hoppers where grid guards cannot be used by providing feed conveyors or baffle-type hoppers. Hoppers must be both:

((~~■~~)) (a) Enclosed and provided with hinged covers; ((~~AND~~

~~■~~)) and

(b) Equipped with an electric interlock so the machine will not operate with the cover open.

AMENDATORY SECTION (Amending WSR 04-14-028, filed 6/29/04, effective 1/1/05)

WAC 296-806-42552 Provide covers with interlocks on ingredient premixers, emulsifiers, and similar machines. ((~~You must:~~

~~•~~)) You must provide covers that attach to machines that have top openings.

Note: The covers should be arranged and interlocked so that power to the machine is shut off when the cover is opened far enough for the operator's fingers to come in contact with the beaters.

AMENDATORY SECTION (Amending WSR 04-14-028, filed 6/29/04, effective 1/1/05)

WAC 296-806-42554 Follow these requirements for open fat kettles. ((~~You must:~~))

(1) You must keep the floor around kettles in nonslip condition.

(2) You must make sure the top of the kettle is at least thirty-six inches above the floor or working level.

AMENDATORY SECTION (Amending WSR 04-14-028, filed 6/29/04, effective 1/1/05)

WAC 296-806-42556 Follow these requirements for steam kettles. ((~~You must:~~))

(1) You must provide positive locking devices to hold kettles in the desired position.

(2) You must provide safety devices for steam kettles according to: ((~~•~~)) The American Society of Mechanical Engineers (ASME) Pressure Vessel Code, section VIII, division I, Unfired Pressure Vessels, 2001, Kettles with Steam Jackets.

AMENDATORY SECTION (Amending WSR 04-14-028, filed 6/29/04, effective 1/1/05)

WAC 296-806-42558 Follow these requirements for chocolate melting, refining, and mixing kettles. ((~~You must:~~))

(1) You must provide a cover to enclose the top of the kettle.

(2) You must make sure the bottom outlet of each kettle is designed so the operator cannot:

((~~•~~)) (a) Reach in to touch the revolving paddle.

((~~•~~)) (b) Come in contact with the shear point between the paddle and the side of the kettle.

AMENDATORY SECTION (Amending WSR 04-14-028, filed 6/29/04, effective 1/1/05)

WAC 296-806-42560 Safeguard meat-processing equipment (circular meat-cutting saws).

((~~Exemption:~~)) EXEMPTION: These requirements do not apply to table-top slicers such as those used in delis and restaurants.

Reference: When bandsaws are used to cut meat, follow the requirements in, Make sure bandsaws meet these requirements, WAC 296-806-48042.

((~~You must:~~))

(1) Make sure all circular meat-cutting saws have both:

((~~•~~)) (a) Constant pressure controls; ((~~AND~~

~~•~~)) and

(b) A brake that automatically begins to stop the blade when the switch is released.

(2) You must make sure each circular meat-cutting saw has a protective guard between the operator and the blade.

(3) You must provide suspended, counterbalanced circular meat-cutting saws with guards that cover at least **one** of the following:

((~~•~~)) (a) Twenty-five degrees of the blade if the saw has two-hand controls; ((~~OR~~

~~•~~)) or

(b) Ninety degrees of the blade if the saw can be operated with one hand.

(4) You must provide saws that are not suspended with a guard that covers ninety degrees of the blade.

Note: The size of the guard depends on whether it is suspended or has one- or two-handed controls.

AMENDATORY SECTION (Amending WSR 04-14-028, filed 6/29/04, effective 1/1/05)

WAC 296-806-42562 Follow these requirements for horizontal dough mixers. ((~~You must:~~))

(1) You must make sure mixers are equipped with both of the following:

((~~•~~)) (a) An individual motor and control; ((~~AND~~ ~~•~~)) and

(b) A conveniently located manual switch that prevents the mixer from being started during servicing or cleaning.

(2) You must locate electrical control stations so control operators have a full view of bowls in the "open" position. ((~~•~~)) These controls, other than a "stop" switch, must not be duplicated.

(3) You must provide mixers with a full enclosure over the bowl that remains closed whenever the agitator is in motion. ((~~•~~)) Minor openings in the enclosure during operation, such as ingredient doors and flour inlets, must each be less than one and one-half square feet in area.

((~~Exemption:~~)) **EXEMPTION:** The full enclosure does not have to remain closed if the mixer has a dumping arrangement that provides safety devices where operators must use both hands in either of these situations:
((~~•~~)) 1. When the agitator is in motion under power and the bowl is open more than one-fifth of its total opening; ((~~OR~~)) or
((~~•~~)) 2. When starting the agitator, if the bowl is open more than one-fifth of its total opening.

((~~You must:~~))

(4) You must make sure overhead covers or doors that can accidentally close are either:

(a) Counterbalanced to remain in the "open" position; ((~~OR~~ ~~•~~)) or

(b) Provided with a catch, brace, or other positive means to hold them open until the operator releases them.

(5) You must locate valves and controls that regulate the coolant in mixer jackets so they can be accessed without creating hazards to the operator.

AMENDATORY SECTION (Amending WSR 04-14-028, filed 6/29/04, effective 1/1/05)

WAC 296-806-42564 Follow these requirements for vertical mixers. ((~~You must:~~))

(1) You must provide a safeguarding device to protect employees from the point of operation, if the nature of the work exposes them to contact with:

((~~•~~)) (a) The pinch point where the mixing tool meets the bowl.

((~~•~~)) (b) The catching hazard of the mixing tool.

Note: ((•)) When evaluating exposure, the following conditions need to be considered:
((–)) 1. How the mixer functions such as visibility of the agitator or ability to accidentally switch the mixer on.
((–)) 2. How the worker performs operations such as adding ingredients without scraping the bowl or reaching into the bowl when the mixer is in motion.
((–)) 3. How close the worker gets to the hazard during operation.
((–)) 4. The worker's tools, clothing, jewelry, or hair that might get caught or fall into mixer.
((–)) 5. Type of guarding, if any.
((–)) 6. Slipping or tripping hazards in the area.

((~~You must:~~))

(2) You must make sure mixers are equipped with both of the following:

((~~•~~)) (a) An individual motor and control; ((~~AND~~
~~•~~)) and
(b) A conveniently located manual switch that prevents the mixer from being started during servicing or cleaning.
(3) You must make sure overhead panels or doors on mixers that can accidentally close are either:
((~~•~~)) (a) Counterbalanced to remain in an open position; ((~~OR~~
~~•~~)) or
(b) Provided with catches, braces, or other positive means to hold them open until the operator releases them.
(4) You must make sure bowl-locking devices are the type that must be intentionally unlocked by the operator.
(5) You must provide devices for moving filled bowls that weigh more than eighty pounds in and out of the mixing position on the machine.

AMENDATORY SECTION (Amending WSR 04-14-028, filed 6/29/04, effective 1/1/05)

WAC 296-806-42566 Follow these requirements for mechanical-feed moulders. ((~~You must:~~
~~•~~)) You must make sure hoppers for mechanical-feed moulders are designed and connected to the proofer so employee's hands cannot contact the in-running rolls.

AMENDATORY SECTION (Amending WSR 04-14-028, filed 6/29/04, effective 1/1/05)

WAC 296-806-42568 Follow these requirements for hand-fed moulders. ((~~You must:~~))
(1) You must provide hand-fed moulders with **either** of the following, so employee's hands cannot enter the hopper and contact in-running rolls:
((~~•~~)) (a) A hopper that can be extended high enough to protect the employee((~~;~~)). The top edge of the hopper needs to be well rounded to prevent injury when struck or bumped by an employee's hand; ((~~OR~~
~~•~~)) or
(b) A belt feed device.
(2) You must provide **each** of these workers with a stopping device that can be easily reached:
((~~•~~)) (a) The operator feeding the moulder.
((~~•~~)) (b) The employee taking the dough away from the moulder.

AMENDATORY SECTION (Amending WSR 04-14-028, filed 6/29/04, effective 1/1/05)

WAC 296-806-42570 Design, install, and construct your ovens according to these requirements. ((~~You must:~~))

((~~•~~)) (1) You must make sure all ovens manufactured or installed **before** August 13, 1999 meet or exceed ANSI Z50.1-1947 design, manufacturing, and installation requirements.

((~~•~~)) (2) You must make sure all ovens manufactured or installed on or **after** August 13, 1999 meet the design, manufacturing, and installation requirements in ANSI/NFPA 86-1999.

AMENDATORY SECTION (Amending WSR 04-14-028, filed 6/29/04, effective 1/1/05)

WAC 296-806-42572 Properly locate emergency "stop" buttons and main shut off valves for ovens. ((~~You must:~~))

(1) You must locate emergency stop buttons on mechanical ovens close to where operators are stationed.

(2) You must locate main shutoff valves where they can be accessed in case of an emergency. ((~~•~~)) Main shutoff valves that permit turning off the fuel or steam in case of an emergency must operate independently of any automatic valves.

AMENDATORY SECTION (Amending WSR 04-14-028, filed 6/29/04, effective 1/1/05)

WAC 296-806-42574 Inspect and test safety devices on ovens. ((~~You must:~~))

(1) You must inspect ovens at least twice a month by a formally appointed, properly trained, bakery employee. ((~~•~~)) Include the following in your inspection:

((~~–~~)) (a) All safety devices.

((~~–~~)) (b) Testing of all safety shutoff valves, making sure they are positively tight.

(2) You must make sure a representative of the oven manufacturer performs an annual inspection.

(3) You must test all piping on ovens to make sure they are gas tight.

(4) You must test oven ((~~systems as follows: • Test~~)) duct systems on indirect recirculating ovens that operate under pressure for tightness at the following intervals:

((~~–~~)) (a) When the oven is first started.

((~~–~~)) (b) At least every six months after that.

AMENDATORY SECTION (Amending WSR 04-14-028, filed 6/29/04, effective 1/1/05)

WAC 296-806-42576 Follow these requirements for peanut-cooling trucks. ((~~You must:~~

~~•~~)) You must make sure the entire top of the peanut-cooling truck has a grid-type cover.

AMENDATORY SECTION (Amending WSR 04-14-028, filed 6/29/04, effective 1/1/05)

WAC 296-806-42578 Follow these requirements for pretzel-rolling, pretzel stick extruding, rotary, and die machines. ((~~You must:~~

~~•~~)) You must protect the operator's hands from getting caught in moving parts by doing **at least one** of the following:

((~~–~~)) (1) Cover the entire opening of dough hoppers with grid-type guards.

((~~–~~)) (2) Extend the hopper higher.

AMENDATORY SECTION (Amending WSR 04-14-028, filed 6/29/04, effective 1/1/05)

WAC 296-806-42580 Safeguard box and roll-type dough sheeters. ((~~You must:~~))

(1) You must guard exposed rolls with **either** of these methods:

((~~•~~)) (a) Guard the nip point of exposed sheeting rolls at the point where the dough enters the rolls; ((~~OR~~

~~•~~)) or

(b) Provide an emergency "stop" bar that extends the length of unguarded rolls that will stop the rolls on contact with the operator, if a barrier guard interferes with machine operation.

(2) You must provide a stopping device for hoppers.

((~~•~~)) (a) Provide an automatic "stop" bar or stopping device along the back edge of the hopper.

((~~–~~)) (b) If machine construction does not allow for this, place the bar or device where it will be most effective.

AMENDATORY SECTION (Amending WSR 04-14-028, filed 6/29/04, effective 1/1/05)

WAC 296-806-42582 Provide proper enclosures for sifters. ((~~You must:~~

~~•~~)) You must make sure enclosures on flour sifters:

((~~–~~)) (1) Are dust tight.

((~~–~~)) (2) Allow for ease of interior inspection.

AMENDATORY SECTION (Amending WSR 04-14-028, filed 6/29/04, effective 1/1/05)

WAC 296-806-42584 Follow these requirements for sugar and spice pulverizers. ((~~You must:~~))

(1) You must remove static electricity by grounding all drive belts used in sugar and spice pulverizers by using metal combs.

(2) You must follow the National Fire Protection Association (NFPA) 61-1999, standard for pulverizing sugar and spice grinding in order to prevent fires and dust explosions in agricultural and food products facilities.

(3) You must provide magnetic separators to reduce fire and explosion hazards.

((~~FORGING MACHINES~~))

AMENDATORY SECTION (Amending WSR 04-14-028, filed 6/29/04, effective 1/1/05)

WAC 296-806-430 ((~~Summary.~~)) Forging machines.

Summary

If your specific machine or operation is not listed here, then follow any general requirements in this section along with the "Requirements for all machines" found in this chapter, WAC 296-806-200 and 296-806-300.

The requirements in this section apply to machines used in the forming of hot metal, such as hot trimming presses, forging hammers, hot forging presses, upsetters, hot bending and hot metal presses, and equipment used in boltheading and rivet making, as well as other forging equipment. For specific forging machine requirements, see Table 430-1.

((~~Exemption:~~)) EXEMPTION: This section does not apply to cold forging operations.

Your responsibility:

To make sure all forging and associated equipment in your workplace are constructed, operated, and maintained in a safe manner.

((~~You must:~~))

GENERAL REQUIREMENTS FOR FORGING MACHINES

((~~Follow these safety requirements when using lead and lead casts~~
~~WAC 296-806-43002.~~
~~Properly inspect and maintain forging equipment~~
~~WAC 296-806-43004.~~
~~Use safety blocks on hammers and presses~~
~~WAC 296-806-43006.~~
~~Make sure tongs meet these requirements~~
~~WAC 296-806-43008.~~
~~Protect employees when removing scale~~

~~WAC 296-806-43010.~~
~~Provide adequate foundations for hammers and presses~~
~~WAC 296-806-43012.~~
~~Follow these requirements for manually operated valves and switches~~
~~WAC 296-806-43014.~~
~~HAMMERS~~
~~Use die keys and shims made of proper-grade material~~
~~WAC 296-806-43016.~~
~~Provide a safety cylinder head~~
~~WAC 296-806-43018.~~
~~Provide a shutoff valve~~
~~WAC 296-806-43020.~~
~~Provide a means for cylinder draining~~
~~WAC 296-806-43022.~~
~~Follow these requirements for pressure pipes~~
~~WAC 296-806-43024.~~
~~Follow these requirements when using board hammers~~
~~WAC 296-806-43026.~~
~~OTHER FORGE FACILITY EQUIPMENT~~
~~Protect against sparks from saws~~
~~WAC 296-806-43028.~~))

You must meet the requirements…	**in this section:**
Follow these safety requirements when using lead and lead casts	WAC 296-806-43002
Properly inspect and maintain forging equipment	WAC 296-806-43004
Use safety blocks on hammers and presses	WAC 296-806-43006
Make sure tongs meet these requirements	WAC 296-806-43008
Protect employees when removing scale	WAC 296-806-43010
Provide adequate foundations for hammers and presses	WAC 296-806-43012
Follow these requirements for manually operated valves and switches	WAC 296-806-43014

Table 430-1
Specific Requirements for Forging Machines

WACs needed in addition to those included under "General Requirements for Forging Machines"	**Steam hammers**	**Airlift hammers**	**Board hammers**	**Saws**
((~~**WACs needed in addition to those included under "General Requirements for Forging Machines"**~~))				
WAC 296-806-43016 Use die keys and shims made of proper-grade material	**X**	**X**		
WAC 296-806-43018 Provide a safety cylinder head	**X**	**X**		
WAC 296-806-43020 Provide a shutoff valve	**X**	**X**		
WAC 296-806-43022 Provide a means for cylinder draining	**X**	**X**		
WAC 296-806-43024 Follow these requirements for pressure pipes	**X**	**X**		
WAC 296-806-43026 Follow these requirements when using board hammers			**X**	
WAC 296-806-43028 Protect against sparks from saws				**X**

((~~GENERAL REQUIREMENTS FOR FORGING~~))

AMENDATORY SECTION (Amending WSR 04-14-028, filed 6/29/04, effective 1/1/05)

WAC 296-806-43002 Follow these safety requirements when using lead and lead casts. ((~~You must:~~))

(1) You must provide thermostats for heating elements to prevent overheating.

(2) You must provide a means of exhaust for fixed or permanent lead pot installations.

(3) You must provide a covered container to store dross skimmings.

(4) You must keep equipment clean, especially from accumulations of yellow lead oxide.

Reference: ((•)) 1. For requirements about, Personal protective equipment (PPE), see the Safety and health core rules, WAC 296-800-160.
((•)) 2. For ventilation requirements when using portable lead pot units, see the General occupational health standards, chapter 296-62 WAC.

AMENDATORY SECTION (Amending WSR 04-14-028, filed 6/29/04, effective 1/1/05)

WAC 296-806-43004 Properly inspect and maintain forging equipment. ((~~You must:~~

~~•~~)) (1) You must keep all forge shop equipment in safe operating condition.

((~~•~~)) (2) You must train personnel in proper inspection and maintenance procedures.

((~~•~~)) (3) You must establish periodic and regular safety inspections.

((~~•~~)) (4) You must schedule frequent and regular safety inspections of all guards and point-of-operation protection devices.

((~~•~~)) (5) You must keep written records of safety inspections that include all of the following:

((~~–~~)) (a) Date of the inspection.

((~~–~~)) (b) Signature of the person doing the inspection.

((~~–~~)) (c) Serial number or other identification for the piece of equipment inspected.

((~~•~~)) (6) You must safeguard all overhead machinery parts so they do not fly off or fall, if the equipment breaks.

AMENDATORY SECTION (Amending WSR 04-14-028, filed 6/29/04, effective 1/1/05)

WAC 296-806-43006 Use safety blocks on hammers and presses. ((~~You must:~~

~~•~~)) (1) You must use safety blocks on hammers and presses when dies are being changed and maintenance or repair work is being done on the machine.

((~~•~~)) (2) You must provide safety blocks or wedges that meet or exceed the specifications and dimensions shown in Table 430-2.

Table 430-2

Strength and Dimensions for Wood Safety Blocks or Wedges

Size of timber inches using actual dimensions	**4x4**	**6x6**	**8x8**	**10x10**	**12x12**	
Square inches in cross section	**16**	**36**	**64**	**100**	**144**	
Minimum allowable crushing strength parallel to grain, p.s.i.	**5,000**	**5,000**	**5,000**	**5,000**	**5,000**	**Note:** Adapted from U.S. Department of Agriculture Technical Bulletin 479. Hardwoods recommended are those whose ultimate crushing strengths in compression parallel to grain are 5,000 p.s.i. (pounds per square inch) or greater.
Maximum static load within short column range	**80,000**	**180,000**	**320,000**	**500,000**	**720,000**	**Note:** Slenderness ratio formula for short columns is L/d = 11, where L = length of timber in inches and d = least dimension in inches; this ratio should not exceed 11.
Safety factor	**10**	**10**	**10**	**10**	**10**	
Maximum recommended weight of forging hammer for timber used	**8,000**	**18,000**	**32,000**	**50,000**	**72,000**	
Maximum allowable length of timber in inches	**44**	**66**	**88**	**100**	**132**	

AMENDATORY SECTION (Amending WSR 04-14-028, filed 6/29/04, effective 1/1/05)

WAC 296-806-43008 Make sure tongs meet these requirements. ((~~You must:~~

~~•~~)) You must make sure tongs used with hammers, presses, upsetters, and forging equipment used in boltheading and rivet making, meet the following requirements:

((~~–~~)) (1) They are long enough so the worker can use the tongs without standing behind them, in order to avoid injury, in case of kickback.

((~~–~~)) (2) The handle ends are not sharp.

Note: ((•)) 1. The worker should be instructed about proper body positions when using tongs.
((•)) 2. Tongs should be checked periodically to see that they remain at the proper hardness level for the job.
((•)) 3. Rings or equivalent devices that are used for locking tongs should be inspected periodically to make sure they are safe.

AMENDATORY SECTION (Amending WSR 04-14-028, filed 6/29/04, effective 1/1/05)

WAC 296-806-43010 Protect employees when removing scale. ((~~You must:~~

~~•~~)) You must protect employees at every hammer and press by:

((~~–~~)) (1) Making sure they do not place a hand or arm between the dies by providing them with devices that reach the full length of the die when removing scale. Examples include:

((■)) (a) Oil swabs.
((■)) (b) Scale removers.
((■)) (c) Other devices that remove scale by reaching the full length of the die.
((–)) (2) Stopping flying scale through construction and arrangement of a scale guard that is *of substantial construction* at the back of every hammer and press.

AMENDATORY SECTION (Amending WSR 04-14-028, filed 6/29/04, effective 1/1/05)

WAC 296-806-43012 Provide adequate foundations for hammers and presses. ((~~You must:~~
~~•~~)) You must provide foundations adequate to support the imposed weight and normal work stress for hammers and presses. ((–)) Hammers and presses must remain on their foundations.

AMENDATORY SECTION (Amending WSR 04-14-028, filed 6/29/04, effective 1/1/05)

WAC 296-806-43014 Follow these requirements for manually operated valves and switches. ((~~You must:~~
~~•~~)) You must make sure all manually operated valves and switches are clearly identified and readily accessible for all of the following:
((–)) (1) Presses.
((–)) (2) Upsetters.
((–)) (3) Forging equipment involved in boltheading and rivet making.

((~~HAMMERS~~))

NEW SECTION

WAC 296-806-43015 Hammers.

You must meet the requirements…	**in this section:**
Use die keys and shims made of proper-grade material	WAC 296-806-43016

You must meet the requirements…	in this section:
Provide a safety cylinder head	WAC 296-806-43018
Provide a shutoff valve	WAC 296-806-43020
Provide a means for cylinder draining	WAC 296-806-43022
Follow these requirements for pressure pipes	WAC 296-806-43024
Follow these requirements when using board hammers	WAC 296-806-43026

AMENDATORY SECTION (Amending WSR 04-14-028, filed 6/29/04, effective 1/1/05)

WAC 296-806-43016 Use die keys and shims made of proper-grade material. ((~~You must:~~

~~•~~)) You must make sure that die keys and shims are made from a grade of material that will not easily crack or splinter.

Note: Die keys and shims should not project more than two inches in front and four inches in back of the ram or die.

AMENDATORY SECTION (Amending WSR 04-14-028, filed 6/29/04, effective 1/1/05)

WAC 296-806-43018 Provide a safety cylinder head. ((~~You must:~~

~~•~~)) You must make sure that every steam, airlift, or air hammer has a safety cylinder head that acts as a cushion if the rod breaks or pulls out of the ram.

AMENDATORY SECTION (Amending WSR 04-14-028, filed 6/29/04, effective 1/1/05)

WAC 296-806-43020 Provide a shutoff valve. ((~~You must:~~

~~•~~)) You must provide each steam and airlift hammer with a quick-closing emergency valve in the admission pipeline that is distinctly marked and in a convenient location. ((–)) This valve needs to be closed and locked in the "off" position when the hammer is being adjusted, repaired, or serviced, or the dies are being changed.

Reference: For requirements about Lockout/tagout (control of hazardous energy), see chapter 296-803 WAC.

AMENDATORY SECTION (Amending WSR 04-14-028, filed 6/29/04, effective 1/1/05)

WAC 296-806-43022 Provide a means for cylinder draining. ((~~You must:~~

~~•~~)) (1) You must provide a means for draining cylinders on steam hammers.

((~~•~~)) (2) You must provide airlift hammers with both main head and clamp cylinder drains.

AMENDATORY SECTION (Amending WSR 04-14-028, filed 6/29/04, effective 1/1/05)

WAC 296-806-43024 Follow these requirements for pressure pipes. ((~~You must:~~

~~•~~)) You must provide steam or air pressure piping on power-driven hammers that meets or exceeds the requirements in:

((~~–~~)) (1) ANSI B31.1.0-1967, Power Piping, with addenda ANSI B31.1.06-1971, for hammers constructed before January 1, 2005.

((~~–~~)) (2) ANSI B31.1.0-2001, Power Piping, with addenda ANSI B31.1.0A-2001, for hammers constructed on or after January 1, 2005.

AMENDATORY SECTION (Amending WSR 04-14-028, filed 6/29/04, effective 1/1/05)

WAC 296-806-43026 Follow these requirements when using board hammers. ((~~You must:~~

~~•~~)) (1) You must securely fasten a suitable enclosure to gravity-dropped board hammers to prevent damaged or detached boards from falling.

((~~•~~)) (2) You must properly secure all major assemblies and fittings that can loosen and fall.

((~~OTHER FORGE FACILITY EQUIPMENT~~))

NEW SECTION

WAC 296-806-43027 Other forge facility equipment.

You must meet the requirements…	in this section:
Protect against sparks from saws	WAC 296-806-43028

AMENDATORY SECTION (Amending WSR 04-14-028, filed 6/29/04, effective 1/1/05)

WAC 296-806-43028 Protect against sparks from saws. ((~~You must:~~ ~~•~~)) You must provide all saws with a sheet metal guard that is positioned to stop sparks. ((~~–~~)) The guard must be constructed of at least one-eighth inch sheet metal.

Note: It is advisable to provide all saws with a means to trap sparks below the saw and to use a tank of water below the saw to reduce the fire hazard.

Reference: Other saw requirements may be found in, Saws and cutting heads, WAC 296-806-480.

((~~GARBAGE (WASTE) DISPOSALS~~))

AMENDATORY SECTION (Amending WSR 04-14-028, filed 6/29/04, effective 1/1/05)

WAC 296-806-435 ((~~Summary.~~)) Garbage waste disposals.

Summary

In addition to the requirements in this section, you need to refer to the following sections of this chapter in order to fully protect your employees from machine hazards:

((~~•~~)) Requirements for all machines, WAC 296-806-200 and 296-806-300.

This section applies to the hazards associated with garbage (waste) disposals found in the workplace. These requirements are designed to protect employees from hazards associated with the point of operation and flying materials.

Your responsibility:

To protect employees from hazards associated with garbage (waste) disposals.

((~~You must:~~

~~Safeguard garbage waste disposal equipment WAC 296-806-43502.~~))

You must meet the requirements…	in this section:
Safeguard garbage (waste) disposal equipment	WAC 296-806-43502

AMENDATORY SECTION (Amending WSR 04-14-028, filed 6/29/04, effective 1/1/05)

WAC 296-806-43502 Safeguard garbage (waste) disposal equipment. ((~~You must:~~))

(1) You must protect employees exposed to the hazards of screw conveyor disposals with a properly designed and mounted trimboard cover that remains in place during operation.

(2) You must provide guarding to protect employees from contact with knives or blades of disposal units. ((•)) The guards need to be strong enough so that an employee's downward thrusting motion will not cause the guard material to open larger than two inches.

Reference: ((•)) You may need to follow additional requirements found in, Make sure guards meet these requirements, WAC 296-806-20042, to keep employees from contacting the knives or blades of disposals.

((~~GLUE SPREADERS~~))

AMENDATORY SECTION (Amending WSR 04-14-028, filed 6/29/04, effective 1/1/05)

WAC 296-806-440 ((~~Summary.~~)) Glue spreaders.

Summary

In addition to the requirements in this section, you need to refer to the following sections of this chapter in order to fully protect your employees from machine hazards:

((•)) Requirements for all machines, WAC 296-806-200 and 296-806-300.

This section applies to safeguarding and emergency controls used to protect employees from the hazards associated with cleaning and operating glue spreaders.

Your responsibility:

To protect employees from hazards associated with glue spreaders.

((~~**You must:**~~

~~Provide guards and automatic shutoffs on glue spreaders WAC 296-806-44002.~~))

You must meet the requirements…	**in this section:**
Provide guards and automatic shutoffs on glue spreaders	WAC 296-806-44002

AMENDATORY SECTION (Amending WSR 04-14-028, filed 6/29/04, effective 1/1/05)

WAC 296-806-44002 Provide guards and automatic shutoffs on glue spreaders. ((~~You must:~~

~~•~~)) (1) You must enclose the in-running side of glue spreaders, leaving enough space to insert stock.

((~~•~~)) (2) You must provide an emergency stop control, such as a panic bar or similar device, that can be reached from the infeed and outfeed sides of the spreader to shut off the power in an emergency.

Note: You may need two controls to reach the emergency stop control from both the infeed and outfeed sides.

((~~IRONWORKERS~~))

AMENDATORY SECTION (Amending WSR 04-14-028, filed 6/29/04, effective 1/1/05)

WAC 296-806-445 ((~~Summary.~~)) Ironworkers.

Summary

In addition to the requirements in this section, you need to refer to the following sections of this chapter in order to fully protect your employees from machine hazards:

((~~•~~)) Requirements for all machines, WAC 296-806-200 and 296-806-300.

This section applies to the hazards associated with hydraulic and mechanical ironworkers.

Your responsibility:

To protect employees from hazards associated with ironworkers.

((~~You must:~~

~~Safeguard ironworkers point of operation~~

~~WAC 296-806-44502.~~

~~Follow these requirements for adjustable restrictors when safeguarding ironworkers~~

~~WAC 296-806-44504.~~))

You must meet the requirements…	**in this section:**
Safeguard ironworkers point of operation	WAC 296-806-44502
Follow these requirements for adjustable restrictors when safeguarding ironworkers	WAC 296-806-44504

AMENDATORY SECTION (Amending WSR 04-14-028, filed 6/29/04, effective 1/1/05)

WAC 296-806-44502 Safeguard ironworkers point of operation. ((~~You must:~~

~~•~~)) You must safeguard the different operating stations on ironworkers according to requirements for all machines, safeguarding methods, WAC 296-806-20042 through 296-806-20058.

((~~Exemption:~~)) If the point-of-operation opening is one-fourth inch or less, safeguarding is not required.
EXEMPTION:

AMENDATORY SECTION (Amending WSR 04-14-028, filed 6/29/04, effective 1/1/05)

WAC 296-806-44504 Follow these requirements for adjustable restrictors when safeguarding ironworkers. ((~~You must:~~

~~•~~)) You must use adjustable restrictors for safeguarding only when guards, devices, or awareness barriers are not feasible.

((~~LATHES~~))

AMENDATORY SECTION (Amending WSR 04-14-028, filed 6/29/04, effective 1/1/05)

WAC 296-806-450 ((~~Summary.~~)) Lathes.

Summary

In addition to the requirements in this section, you need to refer to the following sections of this chapter in order to fully protect your employees from machine hazards:

((~~•~~)) Requirements for all machines, WAC 296-806-200 and 296-806-300.

This section applies to the hazards associated with metal and woodworking lathes.

Your responsibility:

To protect employees from hazards associated with metal and woodworking lathes.

METAL LATHES

((~~You must:~~

~~Provide shields or guards on metal lathes for chip or coolant hazards~~

~~WAC 296-806-45002.~~

~~Safeguard work-holding devices (chucks)~~

~~WAC 296-806-45004.~~

~~Follow these requirements for chip control and handling~~

~~WAC 296-806-45006.~~
~~Safeguard power-clamping devices~~
~~WAC 296-806-45008.~~
~~Restrain extended workpieces on horizontal lathes~~
~~WAC 296-806-45010.~~
~~WOODWORKING LATHES~~
~~Guard cutting heads on profile lathes and swing-head lathes~~
~~WAC 296-806-45012.~~
~~Guard cutting heads on turning lathes~~
~~WAC 296-806-45014.~~
~~Guard automatic turning lathes~~
~~WAC 296-806-45016.~~
~~Guard wood lathes used for turning long pieces of stock~~
~~WAC 296-806-45018.~~))

You must meet the requirements…	**in this section:**
Provide shields or guards on metal lathes for chip or coolant hazards	WAC 296-806-45002
Safeguard work-holding devices (chucks)	WAC 296-806-45004
Follow these requirements for chip control and handling	WAC 296-806-45006
Safeguard power-clamping devices	WAC 296-806-45008
Restrain extended workpieces on horizontal lathes	WAC 296-806-45010

((~~METAL LATHES~~))

AMENDATORY SECTION (Amending WSR 04-14-028, filed 6/29/04, effective 1/1/05)

WAC 296-806-45002 Provide shields or guards on metal lathes for chip or coolant hazards. ((~~You must:~~
~~•~~)) You must provide a shield or other equally effective guard to prevent chips or coolant from being thrown or splashed on the operator, aisle, or other assigned work area, when exposed to these hazards. ((–)) Examples of guards include permanent chip and coolant shields.

AMENDATORY SECTION (Amending WSR 07-03-163, filed 1/24/07, effective 4/1/07)

WAC 296-806-45004 Safeguard work-holding devices (chucks). ((~~You must:~~

~~•~~)) You must provide a fixed or movable guard, device, awareness barrier, or peripheral cover over areas exposed to the operator on work-holding devices or chucks when:

((–)) (1) They are in the clamped mode and have parts that extend beyond the outside diameter of the holding device.

((–)) (2) They have an irregular shape to the periphery of their body.

AMENDATORY SECTION (Amending WSR 04-14-028, filed 6/29/04, effective 1/1/05)

WAC 296-806-45006 Follow these requirements for chip control and handling. ((~~You must:~~

~~•~~)) You must make sure employees' hands do not contact chips that are being generated, such as long stringy chips.

Note: Chips may be removed by using things such as tools, pullers, brushes, and shovels.

AMENDATORY SECTION (Amending WSR 04-14-028, filed 6/29/04, effective 1/1/05)

WAC 296-806-45008 Safeguard power-clamping devices. ((~~You must:~~

~~•~~)) You must protect the operator from the hazards of thrown material when the clamping device does not have adequate pressure to hold the material.

Note: ((•)) Examples of safeguarding methods include:
((–)) 1. Interlocks.
((–)) 2. Retaining covers((~~;~~)) that contain the workpiece if it falls or flies out from the clamped work-holding device.
((–)) 3. Visual or audible warnings((~~;~~)) that are located so they can be seen or heard by the operator in the normal work area, making the operator aware that there is no pressure on the clamp side of the actuator.

AMENDATORY SECTION (Amending WSR 04-14-028, filed 6/29/04, effective 1/1/05)

WAC 296-806-45010 Restrain extended workpieces on horizontal lathes. ((~~You must:~~

~~•~~)) You must safeguard employees from the hazards of work pieces that extend beyond the edges of the horizontal lathe by:

((–)) (1) Restraining work pieces as needed to prevent whipping; ((~~AND~~

–)) and

(2) Isolating work pieces with an awareness barrier, fixed or movable guard, or railing.

((~~WOODWORKING LATHES~~))

NEW SECTION

WAC 296-806-45011 Woodworking lathes.

You must meet the requirements…	in this section:
Guard cutting heads on profile lathes and swing-head lathes	WAC 296-806-45012
Guard cutting heads on turning lathes	WAC 296-806-45014
Guard automatic turning lathes	WAC 296-806-45066
Guard wood lathes used for turning long pieces of stock	WAC 296-806-45018

AMENDATORY SECTION (Amending WSR 04-14-028, filed 6/29/04, effective 1/1/05)

WAC 296-806-45012 Guard cutting heads on profile lathes and swing-head lathes. ((~~You must:~~

~~•~~)) (1) You must cover all cutting heads on profile lathes, swing-head lathes, and heel-turning machines with a metal guard.

((~~•~~)) (2) You must make sure guards are made of:

((–)) (a) Sheet metal at least one-sixteenth inches thick.

((–)) (b) Cast iron at least three-sixteenth inches thick.

AMENDATORY SECTION (Amending WSR 04-14-028, filed 6/29/04, effective 1/1/05)

WAC 296-806-45014 Guard cutting heads on turning lathes. ((~~You must:~~

~~•~~)) You must install hoods or shields that cover as completely as possible all cutting heads, whether or not they rotate.

Note: The hood or shield should be hinged to the machine so it can be moved to make adjustments.

AMENDATORY SECTION (Amending WSR 04-14-028, filed 6/29/04, effective 1/1/05)

WAC 296-806-45016 Guard automatic turning lathes. ((~~You must:~~ ~~•~~)) You must install hoods that completely enclose the cutter blades, except at contact points where stock is being cut, on the following types of machines:

((~~–~~)) (1) Shoe last and spoke lathes.
((~~–~~)) (2) Doweling machines.
((~~–~~)) (3) Heel-turning machines.
((~~–~~)) (4) Automatic turning lathes with rotating knives.

AMENDATORY SECTION (Amending WSR 04-14-028, filed 6/29/04, effective 1/1/05)

WAC 296-806-45018 Guard wood lathes used for turning long pieces of stock. ((~~You must:~~ ~~•~~)) You must install long, curved guards extending over lathe tops where work pieces are held only between the two centers, to prevent stock from being thrown out of the machine.

((~~MECHANICAL POWER PRESSES~~))

AMENDATORY SECTION (Amending WSR 04-14-028, filed 6/29/04, effective 1/1/05)

WAC 296-806-455 ((~~Summary.~~)) Mechanical power presses.

Summary

In addition to the requirements in this section, you need to refer to the following sections of this chapter in order to fully protect your employees from machine hazards:

((~~•~~)) Requirements for all machines, WAC 296-806-200 and 296-806-300.

This section applies to mechanically powered machines that transmit force to cut, form, or assemble metal or other materials through tools or dies attached to or operated by slides.

((~~Exemption:~~)) EXEMPTION: This section does not apply to:

((~~•~~)) 1. Power press brakes.
((~~•~~)) 2. Hydraulic power presses.
((~~•~~)) 3. Pneumatic power presses.
((~~•~~)) 4. Slow-acting horizontal mechanical presses with large beds (bulldozers).
((~~•~~)) 5. Hot bending and hot metal presses.
((~~•~~)) 6. Forging presses and hammers.
((~~•~~)) 7. Riveting machines.
((~~•~~)) 8. Cold headers and cold formers.
((~~•~~)) 9. Eyelet machines.

((•)) 10. High energy rate presses.
((•)) 11. Ironworkers and detail punches.
((•)) 12. Metal shears.
((•)) 13. Powdered metal presses.
((•)) 14. Press welders.
((•)) 15. Turret and plate punching machines.
((•)) 16. Wire termination machines.
((•)) 17. Welding presses.

Reference: ((•)) 1. See, Forging machines, for forging press and hammer requirements, WAC 296-806-430.
((•)) 2. See, Ironworkers, for requirements for ironworkers, WAC 296-806-445.
((•)) 3. See, Press brakes, for power press brake requirements, WAC 296-806-465.

Your responsibility:

To make sure mechanical power presses meet the requirements of this section.

((~~**You must:**~~))

Design and construction

((~~Make sure mechanical power presses are properly designed and constructed~~

~~WAC 296-806-45502.~~

~~**Safeguarding**~~

~~Safeguard presses that use unitized tooling~~

~~WAC 296-806-45504.~~

~~Protect operators from guidepost hazards~~

~~WAC 296-806-45506.~~

~~Safeguard the point of operation~~

~~WAC 296-806-45508.~~

~~Make sure point-of-operation guards are properly designed and constructed~~

~~WAC 296-806-45510.~~

~~Make sure barrier guards used to safeguard the point of operation meet these requirements~~

~~WAC 296-806-45512.~~

~~Make sure point-of-operation devices are effective~~

~~WAC 296-806-45514.~~

~~Make sure presence-sensing devices used to safeguard the point of operation meet these requirements~~

~~WAC 296-806-45516.~~

~~Make sure pull-back devices used to safeguard the point of operation meet these requirements~~

~~WAC 296-806-45518.~~

~~Make sure restraint (holdout) devices used to safeguard the point of operation meet these requirements~~

~~WAC 296-806-45520.~~

~~Make sure two-hand control devices used to safeguard the point of operation meet these requirements~~

~~WAC 296-806-45522.~~

~~Make sure two-hand trip devices used to safeguard the point of operation meet these requirements~~

~~WAC 296-806-45524.~~

~~Provide additional safeguards when the operator puts one or both hands into the point of operation~~

~~WAC 296-806-45526.~~

~~**Operations**~~

~~Establish a die setting procedure~~

~~WAC 296-806-45528.~~

~~Handle dies safely~~

~~WAC 296-806-45530.~~

~~Protect die setters during setup and tryout~~

~~WAC 296-806-45532.~~

~~Train press operators~~

~~WAC 296-806-45534.~~
~~Operate mechanical power presses safely~~
~~WAC 296-806-45536.~~
~~Provide tools and other means to protect press operators~~
~~WAC 296-806-45538.~~
~~Inspect and maintain presses~~
~~WAC 296-806-45540.~~
~~Make sure presses and operating practices used in the PSDI mode of operation meet these requirements~~
~~WAC 296-806-45542.~~))

You must meet the requirements…	**in this section:**
Make sure mechanical power presses are properly designed and constructed	WAC 296-806-45502

((~~DESIGN AND CONSTRUCTION~~))

AMENDATORY SECTION (Amending WSR 04-14-028, filed 6/29/04, effective 1/1/05)

WAC 296-806-45502 Make sure mechanical power presses are properly designed and constructed. ((~~You must:~~
~~•~~)) (1) You must make sure mechanical power presses manufactured **before** January 1, 2005, meet the requirements of American National Standards Institute (ANSI) B11.1-1971, Safety Requirements for the Construction, Care, and Use of Mechanical Power Presses.
((~~•~~)) (2) You must make sure mechanical power presses manufactured, reconstructed, or modified **on or after** January 1, 2005, meet the requirements of ANSI B11.1-2001, Safety Requirements for Mechanical Power Presses.

((~~SAFEGUARDING~~))

NEW SECTION

WAC 296-806-45503 Safeguarding.

You must meet the requirements…	in this section:
Safeguard presses that use unitized tooling	WAC 296-806-45504
Protect operators from guidepost hazards	WAC 296-806-45506
Safeguard the point of operation	WAC 296-806-45508
Make sure point-of-operation guards are properly designed and constructed	WAC 296-806-45510
Make sure barrier guards meet these requirements	WAC 296-806-45512
Make sure point-of-operation devices are effective	WAC 296-806-45514
Make sure presence-sensing devices used to safeguard the point of operation meet these requirements	WAC 296-806-45516
Make sure pull-back devices used to safeguard the point of operation meet these requirements	WAC 296-806-45518
Make sure restraint (holdout) devices used to safeguard the point of operation meet these requirements	WAC 296-806-45520
Make sure two-hand control devices used to safeguard the point of operation meet these requirements	WAC 296-806-45522
Make sure two-hand trip devices used to safeguard the point of operation meet these requirements	WAC 296-806-45524
Provide additional safeguards when the operator puts one or both hands into the point of operation	WAC 296-806-45526

AMENDATORY SECTION (Amending WSR 04-14-028, filed 6/29/04, effective 1/1/05)

WAC 296-806-45504 Safeguard presses that use unitized tooling. ((~~**You must:**~~

~~•~~)) You must safeguard the opening between the top of the punch holder and the face of the slide or striking pad by using properly installed, adjusted, and maintained guards or devices.

AMENDATORY SECTION (Amending WSR 04-14-028, filed 6/29/04, effective 1/1/05)

WAC 296-806-45506 Protect operators from guidepost hazards. ((~~You must:~~

~~•~~)) You must use properly installed, adjusted, and maintained guards or devices to protect operators from the hazards created by:

((~~–~~)) (1) Guideposts separating from their bushings.

((~~–~~)) (2) Similar pinch points between the slide (moving die) and fixed die or press attachments.

((~~Exemption:~~)) **EXEMPTION:** This requirement does not apply if the opening is one-fourth inch or less, before use.

AMENDATORY SECTION (Amending WSR 04-14-028, filed 6/29/04, effective 1/1/05)

WAC 296-806-45508 Safeguard the point of operation. ((~~You must:~~

~~•~~)) You must protect employees from point-of-operation hazards by using properly installed, adjusted, and maintained guards or devices.

((~~Exemption:~~)) **EXEMPTION:** This requirement does not apply if the point-of-operation opening is one-fourth inch or less, before use.

Note: ((~~•~~)) 1. You may use a combination of guards and devices as long as employees are completely protected from point-of-operation hazards.
((~~•~~)) 2. Hand tools used for placing materials into the press, or removing them from the press, are not a substitute for point-of-operation guards or devices.

AMENDATORY SECTION (Amending WSR 04-14-028, filed 6/29/04, effective 1/1/05)

WAC 296-806-45510 Make sure point-of-operation guards are properly designed and constructed. ((~~You must:~~

~~•~~)) You must make sure each guard:

((~~–~~)) (1) Prevents the operator's hands or other body parts from reaching through, over, under, or around the guard into the point of operation.

((~~–~~)) (2) Has no opening larger than the maximum permissible openings shown in Table 200-1, Largest Allowable Guard Openings, WAC 296-806-20042.

((~~–~~)) (3) Does not create a pinch point between the guard and moving machine parts.

((~~–~~)) (4) Uses fasteners that cannot be easily removed by the operator.

((~~–~~)) (5) Is easy to inspect.

((~~–~~)) (6) Provides the best view of the point of operation for the type of work.

AMENDATORY SECTION (Amending WSR 04-14-028, filed 6/29/04, effective 1/1/05)

WAC 296-806-45512 Make sure barrier guards meet these requirements. ((~~You must:~~

~~•~~)) (1) You must make sure a fixed barrier guard is attached to a fixed surface such as the stripper, die shoe, press frame, or bolster plate.

((~~•~~)) (2) You must make sure the interlocked barrier guard:

((~~–~~)) (a) Is attached to a fixed surface such as the press frame or bolster plate.

((~~–~~)) (b) Prevents cycling (stroking) of the press when the interlocked section of the guard is not in the protecting position.

((~~–~~)) (c) Cannot open until hazardous motion of the slide has stopped.

((~~•~~)) (3) You must not use the hinged or movable sections of an interlocked barrier guard for manual feeding.

((~~•~~)) (4) You must make sure an adjustable barrier guard is:

((~~–~~)) (a) Attached to a fixed surface such as the press frame, bolster plate, or die shoe.

((~~–~~)) (b) Adjusted only by authorized persons who can apply Table 200-1, Largest Allowable Guard Openings, WAC 296-806-20042.

Reference: See, Provide additional safeguards when the operator puts one or both hands into the point of operation, WAC 296-806-45526, for additional safeguards that are required if the operator puts one or both hands into the point of operation to feed or remove parts, and the point of operation is protected by a Type B gate or movable barrier device.

AMENDATORY SECTION (Amending WSR 04-14-028, filed 6/29/04, effective 1/1/05)

WAC 296-806-45514 Make sure point-of-operation devices are effective. ((~~You must:~~

~~•~~)) (1) You must make sure point-of-operation devices protect the operator from hazards as shown in Table 455-1, Point-of-Operation Devices.

((~~•~~)) (2) You must make sure the motor start button is protected against accidental contact.

Table 455-1
Point-of-Operation Devices

Type of device	Type of operator protection that must be provided:
Presence-sensing device (part-revolution clutch press)	If the operator's hands or other body part are in the point of operation: ((~~•~~)) 1. Prevents initiating a press cycle (stroke); **OR** ((~~•~~)) 2. Stops the press during the closing portion of the cycle (stroke)
Presence-sensing device (full-revolution clutch press)	Do **NOT** use for point-of-operation safeguarding

Type of device	Type of operator protection that must be provided:
Pull-back device	As the die closes: ((•)) 1. Withdraws the operator's hands if they are located in the point of operation; **OR** ((•)) 2. Prevents the operator from reaching into the point of operation
Restraint (holdout) device	Prevents the operator from reaching into the point of operation at all times
((~~Two-hand~~)) 2-hand control device ((~~Two-hand~~)) 2-hand trip device	((•)) Requires operators to use both hands to activate controls that are far enough away from the point of operation so the slide completes the closing portion of the cycle (stroke) or stops before they can reach into the point of operation
Type A gate or movable barrier device	Encloses the point of operation: ((•)) 1. Before a press cycle (stroke) can be initiated; **AND** ((•)) 2. Remains closed until slide motion has stopped
Type B gate or movable barrier device	Encloses the point of operation: ((•)) 1. Before a press cycle (stroke) can be initiated; **AND** ((•)) 2. Remains closed until slide motion has stopped during the closing portion of the cycle (stroke)
Sweep device	Do **NOT** use for point-of-operation safeguarding

AMENDATORY SECTION (Amending WSR 04-14-028, filed 6/29/04, effective 1/1/05)

WAC 296-806-45516 Make sure presence-sensing devices used to safeguard the point of operation meet these requirements. ((~~**You must:**~~

~~•~~)) (1) You must make sure the presence-sensing device is interlocked into the control circuit to prevent or stop slide motion if the operator's hand or other body part is within the sensing field of the device during the downstroke of the press slide.

((~~•~~)) (2) You must make sure muting of the device is done only during the upstroke of the press slide.

((~~•~~)) (3) You must make sure failure of **any** component of the device:

((~~–~~)) (a) Does not prevent normal stopping action of the press.

((–)) (b) Prevents initiation of another cycle (stroke) until corrected.

((–)) (c) Is indicated by the system.

((•)) (4) You must use guards to protect all areas of entry to the point of operation not protected by the presence-sensing device.

((•)) (5) You must make sure the sensing field of the device is located farther from the point of operation than the minimum safety distance as determined by the following formula:

$$D = 63 \times T$$

Where:

D = minimum safety distance (in inches)

T = stopping time of the press measured at approximately the 90 degree position of crankshaft rotation (in seconds)

Example: The number in the formula represents the hand speed of the operator (sixty-three inches per second). If your press has a stopping time of one-half second (.5 second), the calculations would be:
D = 63 x .5 = 31.5
The sensing field would need to be at least thirty-one and one-half inches from the point of operation.

Reference: See, Provide additional safeguards when the operator puts one or both hands into the point of operation, WAC 296-806-45526, while feeding or removing parts, for additional safeguards that are required if the operator puts one or both hands into the point of operation to feed or remove parts, and the point of operation is protected by a presence-sensing device.

AMENDATORY SECTION (Amending WSR 04-14-028, filed 6/29/04, effective 1/1/05)

WAC 296-806-45518 Make sure pull-back devices used to safeguard the point of operation meet these requirements. ((~~You must:~~

~~•~~)) (1) You must make sure presses requiring more than one operator have a separate pull-back device for each operator.

((•)) (2) You must make sure each pull-back device has attachments:

((–)) (a) For each of the operator's hands.

((–)) (b) That are connected to and operated only by the press slide or its attached die.

((–)) (c) That are adjusted to either:

((■)) (i) Prevent the operator from reaching into the point of operation; ((~~OR~~

■)) or

(ii) Withdraw the operator's hands from the point of operation before the dies close.

((•)) (3) You must check each pull-back device that is being used for proper adjustment at these times:

((–)) (a) At the start of each operator shift.

((–)) (b) After a new die set-up.

((–)) (c) When operators are changed.

((•)) (4) You must complete necessary maintenance or repair work before operating the press.

Reference: For recordkeeping requirements for maintenance or repair work, see Inspect and maintain presses, WAC 296-806-45540.

AMENDATORY SECTION (Amending WSR 04-14-028, filed 6/29/04, effective 1/1/05)

WAC 296-806-45520 Make sure restraint (holdout) devices used to safeguard the point of operation meet these requirements. ((~~You must:~~

~~•~~)) (1) You must make sure presses requiring more than one operator have separate restraint devices for each operator.

((~~•~~)) (2) You must make sure each restraint device has attachments:

((~~–~~)) (a) For each of the operator's hands.

((~~–~~)) (b) That are securely anchored.

((~~–~~)) (c) That are adjusted so the operator cannot reach into the point of operation.

AMENDATORY SECTION (Amending WSR 04-14-028, filed 6/29/04, effective 1/1/05)

WAC 296-806-45522 Make sure two-hand control devices used to safeguard the point of operation meet these requirements. ((~~You must:~~

~~•~~)) (1) You must make sure presses that require more than one operator:

((~~–~~)) (a) Have separate two-hand controls for each operator.

((~~–~~)) (b) Need concurrent application of all operators' controls to activate the slide.

((~~•~~)) (2) You must make sure the slide stops if any operator's hand is removed from a control button.

((~~•~~)) (3) You must make sure two-hand controls are fixed in position and can be moved only by authorized persons.

((~~•~~)) (4) You must make sure the controls are located farther from the point of operation than the minimum safety distance as determined by the following formula:

$$D = 63 \times T$$

Where:

D = minimum safety distance (in inches)

T = stopping time of the press measured at approximately the 90 degree position of crankshaft rotation (in seconds)

Example: The number in the formula represents the hand speed of the operator (63 inches per second). If your press has a stopping time of one-half second (.5 second), the calculations would be:
D = 63 x .5 = 31.5
The controls would need to be at least 31 1/2 inches from the point of operation.

Reference: See, Provide additional safeguards when the operator puts one or both hands into the point of operation, WAC 296-806-45526, for additional required safeguards.

AMENDATORY SECTION (Amending WSR 04-14-028, filed 6/29/04, effective 1/1/05)

WAC 296-806-45524 Make sure two-hand trip devices used to safeguard the point of operation meet these requirements. ((~~You must:~~

~~•~~)) (1) You must make sure presses requiring more than one operator:

((–)) (a) Have separate two-hand trips for each operator.

((–)) (b) Need concurrent application of all operators' controls to activate the slide.

((•)) (2) You must make sure the two-hand trips are fixed in position and can be moved only by authorized persons.

((•)) (3) You must make sure the controls are located farther from the point of operation than the minimum safety distance as determined by the following formula:

D = 63 x T

Where:

D = minimum safety distance (in inches)

T = the maximum time the press takes for the die to close after the press has been tripped (in seconds)

Example: The number in the formula represents the hand speed of the operator (63 inches per second). If your press has a die closing time of one-half second (.5 second), the calculations would be:
D = 63 x .5 = 31.5
The trip devices would need to be at least 31 1/2 inches from the point of operation.

AMENDATORY SECTION (Amending WSR 04-14-028, filed 6/29/04, effective 1/1/05)

WAC 296-806-45526 Provide additional safeguards when the operator puts one or both hands into the point of operation.

((~~IMPORTANT:~~)) **Important:**

This rule applies when the operator puts one or both hands into the point of operation to feed or remove parts, and the point of operation is protected by **any** of the following:

((•)) 1. Presence-sensing device.

((•)) 2. Two-hand control.

((•)) 3. Type B gate or movable barrier device.

((~~**You must:**~~

~~•~~)) (1) You must make sure the press has both a:

((–)) (a) Stopping-performance monitor (previously called brake-system monitor); ((~~**AND**~~

–)) and

(b) Control system that monitors the performance of safety-related functions (previously called control reliability).

((•)) (2) You must make sure the stopping-performance monitor meets the requirements of:

((–)) (a) American National Standards Institute (ANSI) B11.1-1982, Mechanical Power Presses - Safety Requirements for Construction, Care, and Use for presses manufactured **before** January 1, 2005.

((–)) (b) ANSI B11.1-2001, Safety Requirements for Mechanical Power Presses for presses manufactured **on or after** January 1, 2005.

((•)) (3) You must make sure the control system monitors the performance of safety-related functions so that failure of any component in the control system:

((–)) (a) Does not prevent normal stopping action of the press.

((–)) (b) Prevents initiation of another cycle (stroke) until the failure is corrected.

((–)) (c) Can be detected by a simple test or is indicated by the control system.

((~~Exemption:~~)) EXEMPTION: This requirement does not apply to control system components that do not affect protection from point-of-operation hazards.

((~~**Definition:**~~
~~The control system includes the sensors, manual input and mode selection elements, interlocking and decision-making circuitry, and output elements of the press-operating devices and mechanisms.~~))

((~~OPERATIONS~~))

NEW SECTION

WAC 296-806-45527 Operations.

You must meet the requirements…	in this section:
Establish a die setting procedure	WAC 296-806-45528
Handle dies safely	WAC 296-806-45530
Protect die setters during setup and tryout	WAC 296-806-45532
Train press operators	WAC 296-806-45534
Operate mechanical power presses safely	WAC 296-806-45536
Provide tools and other means to protect press operators	WAC 296-806-45538
Inspect and maintain presses	WAC 296-806-45540
Make sure presses and operating practices used in the PSDI (presence sensing device initiation) mode of operation meet these requirements	WAC 296-806-45542

AMENDATORY SECTION (Amending WSR 04-14-028, filed 6/29/04, effective 1/1/05)

WAC 296-806-45528 Establish die setting procedures. ((~~**You must:**~~
~~•~~)) (1) You must develop and use procedures to protect employees from the hazards of die setting.

((~~•~~)) (2) You must make sure die setters are provided with at least the following information:

((~~–~~)) (a) Rated press capacity requirements for the die.

((~~–~~)) (b) Weight of the upper die and other slide attachments required for job setup and setting counterbalance air pressure.

((~~–~~)) (c) Total die weight.

Note: This information may be stamped on the die or kept in a file that is readily available to the die setters.

AMENDATORY SECTION (Amending WSR 04-14-028, filed 6/29/04, effective 1/1/05)

WAC 296-806-45530 Handle dies safely. ((~~You must:~~

~~•~~)) (1) You must make sure dies requiring mechanical handling have handling equipment attachment points.

((~~•~~)) (2) You must use die stops or other means to prevent losing control of the die while setting or removing dies from presses that are inclined.

((~~•~~)) (3) You must make sure the upper and lower shoes will securely mount the die to the bolster and slide.

((~~•~~)) (4) You must use additional means of securing the upper shoe to the slide where clamp caps or set screws are used in conjunction with punch stems.

((~~•~~)) (5) You must make sure spring-loaded turnover bars are provided for presses designed to accept them.

AMENDATORY SECTION (Amending WSR 04-14-028, filed 6/29/04, effective 1/1/05)

WAC 296-806-45532 Protect die setters during setup and tryout. ((~~You must:~~))

(1) You must use safety blocks when an employee has to put their hands or other body part into the point of operation to adjust or repair dies.

(2) You must protect die setters doing die tryout from point-of-operation hazards by **at least one** of the following:

((~~•~~)) (a) Properly installed, adjusted, and maintained guards or devices.

((~~•~~)) (b) Proper use of INCH mode (part-revolution clutch press).

((~~•~~)) (c) Proper use of JOG mode (full-revolution clutch press).

AMENDATORY SECTION (Amending WSR 04-14-028, filed 6/29/04, effective 1/1/05)

WAC 296-806-45534 Train press operators. ((~~You must:~~))

(1) You must train operators to safely operate the press.

(2) You must make sure modified or reconstructed presses have instructions to establish new or changed guidelines for use and care of the press.

AMENDATORY SECTION (Amending WSR 04-14-028, filed 6/29/04, effective 1/1/05)

WAC 296-806-45536 Operate mechanical power presses safely. ((~~You must:~~

~~•~~)) You must operate the press within the manufacturer's rated capacities.

Note: Rated capacities include, but are not limited to:
((–)) 1. Structural capacity.
((–)) 2. Torque capacity.
((–)) 3. Energy capacity.
((–)) 4. Thermal capacity.
((–)) 5. Attachment weight.
((–)) 6. Die shutheight.

AMENDATORY SECTION (Amending WSR 04-14-028, filed 6/29/04, effective 1/1/05)

WAC 296-806-45538 Provide tools and other means to protect press operators. ((~~You must:~~
~~•~~)) (1) You must make sure hand tools are provided and used to free and remove workpieces or scrap stuck in the die.
((~~•~~)) (2) You must provide means for handling scrap from roll feed or random length stock operations.
((~~•~~)) (3) You must provide and use means to keep operators and die setters from reaching into the point of operation or other hazard area to lubricate material or die components.

Note: ((•)) 1. Means for lubricating include, but are not limited to:
((–)) a. Brushes.
((–)) b. Swabs.
((–)) c. Lubricating rolls.
((–)) d. Manual spray systems.
((–)) e. Automatic spray systems.
((•)) 2. Handles on brushes or swabs should be long enough to keep persons using them clear of the point of operation.

AMENDATORY SECTION (Amending WSR 04-14-028, filed 6/29/04, effective 1/1/05)

WAC 296-806-45540 Inspect and maintain presses. ((~~You must:~~))
(1) You must make sure maintenance personnel are trained and competent to inspect and maintain power presses.
(2) You must keep records of all maintenance or repair work.
(3) You must inspect and test the following press systems **at least weekly:**
((~~•~~)) (a) Clutch/brake mechanism.
((~~•~~)) (b) Antirepeat feature.
((~~•~~)) (c) Single stroke mechanism.
((~~•~~)) (d) Keep records of inspections and tests.

((~~Exemption:~~)) EXEMPTION: You do not have to do weekly inspections if your press has both:

((–)) 1. Performance of safety-related functions monitoring (previously called control reliability); **((~~AND~~))** and
((–)) 2. A stopping-performance monitor (previously called brake-system monitor) does not require weekly inspections.

Reference: For requirements for these monitoring devices, see Provide additional safeguards when the operator puts one or both hands into the point of operation, WAC 296-806-45526.

AMENDATORY SECTION (Amending WSR 04-14-028, filed 6/29/04, effective 1/1/05)

WAC 296-806-45542 Make sure presses and operating practices used in the PSDI (presence sensing device initiation) mode of operation meet these requirements. ((~~You must:~~

~~•~~)) You must make sure presses and operating practices used in the PSDI mode meet the requirements of 29 C.F.R. 1910.217(h), Presence Sensing Device Initiation (PSDI).

Note: 29 C.F.R. 1910.217(h) contains requirements for certification and validation of mechanical power presses used in the PSDI mode of operation.

((~~MILLS~~))

AMENDATORY SECTION (Amending WSR 04-14-028, filed 6/29/04, effective 1/1/05)

WAC 296-806-460 ((~~Summary.~~)) Mills.

Summary

In addition to the requirements in this section, you need to refer to the following sections of this chapter in order to fully protect your employees from machine hazards:

((~~•~~)) Requirements for all machines, WAC 296-806-200 and 296-806-300.

This section applies only to mills in the rubber and plastics industry that have in-running metal rolls that are set horizontally and run toward each other.

Your responsibility:

To protect employees from hazards associated with mills.

((~~You must:~~

~~Meet height requirements for mill rolls~~

~~WAC 296-806-46002.~~

~~Provide mill safety controls~~

~~WAC 296-806-46004.~~

~~Follow these stopping limit requirements for mills~~

~~WAC 296-806-46006.~~))

You must meet the requirements…	**in this section:**
Meet height requirements for mill rolls	WAC 296-806-46002
Provide mill safety controls	WAC 296-806-46004
Follow these stopping limit requirements for mills	WAC 296-806-46006

AMENDATORY SECTION (Amending WSR 04-14-028, filed 6/29/04, effective 1/1/05)

WAC 296-806-46002 Meet height requirements for mill rolls. ((~~You must:~~

~~•~~)) You must make sure that the tops of mill rolls installed after August 27, 1971, are at least fifty inches above the working level where the operator stands. ((–)) This distance applies to the actual working level, which could be:

((■)) (1) The general floor level.

((■)) (2) In a pit.

((■)) (3) On a platform.

AMENDATORY SECTION (Amending WSR 04-14-028, filed 6/29/04, effective 1/1/05)

WAC 296-806-46004 Provide mill safety controls.

((~~Exemption:~~)) EXEMPTION: These rules do not apply to mills if the machinery is permanently set up so employees:

((~~•~~)) 1. Cannot reach through, over, under, or around to come in contact with the roll bite; ((~~OR~~)) or

((~~•~~)) 2. Cannot be caught between a roll and nearby objects.

((~~You must:~~))

(1) You must provide a safety trip control that is easy to reach, operates readily on contact, and is located in front and back of each mill. Each safety trip control must include at least one of the following:

((~~•~~)) (a) Pressure-sensitive body bars that:

((–)) (i) Are installed at the front and back of mills having a forty-six inch roll height or over.

((–)) (ii) Operate readily on contact from the pressure of the mill operator's body.

((~~•~~)) (b) Safety trip rods that are:

((–)) (i) Installed in the front and back of each mill and located within two inches of the front and rear rolls.

((–)) (ii) Installed so the top rods are no more than seventy-two inches above the level where the operator stands.

((–)) (iii) Easy to reach and operate when the rods are pushed or pulled.

((~~•~~)) (c) Safety tripwire cables or wire center cords that are:

((–)) (i) Installed in the front and back of each mill.

((–)) (ii) Located within two inches of the face of the rolls.

((–)) (iii) Installed so that cables are no more than seventy-two inches above the level where the operator stands.

((–)) (iv) Easy to operate whether pushed or pulled.

(2) You must make sure that all auxiliary equipment such as mill dividers, support bars, spray pipes, feed conveyors, and strip knives do not interfere with safety devices.

AMENDATORY SECTION (Amending WSR 04-14-028, filed 6/29/04, effective 1/1/05)

WAC 296-806-46006 Follow these stopping limit requirements for mills. ((~~You must:~~

~~•~~)) You must make sure that mills are stopped within one and one-half percent of the fastest speed at which they operate when empty. ((—)) When mills operate at more than two hundred fifty feet per minute, stopping distances above one and one-half percent of their fastest speed are allowed, but must have engineering support.

((~~PRESS BRAKES~~))

AMENDATORY SECTION (Amending WSR 04-14-028, filed 6/29/04, effective 1/1/05)

WAC 296-806-465 ((~~Summary.~~)) Press brakes.

Summary

If your specific machine or operation is not listed here, then follow any general requirements in this section along with the "Requirements for all machines" in this chapter, WAC 296-806-200 and 296-806-300.

This section applies to all machines classified as power press brakes. Power press brakes use a ram and bed to bend material.

Your responsibility:

To protect employees from hazards associated with power press brakes.

((~~You must:~~))

General requirements for press brakes

((~~Provide auxiliary safety aids~~

~~WAC 296-806-46502.~~

~~Safeguard the point of operation on press brakes~~

~~WAC 296-806-46504.~~

~~**Safe distance safeguarding**~~

~~Follow this requirement when using safe distance safeguarding~~

~~WAC 296-806-46506.~~

~~Develop a safe distance safeguarding program~~

~~WAC 296-806-46508.~~

~~Follow these requirements for safe distance training~~

~~WAC 296-806-46510.~~

~~Require safe distance retraining~~

~~WAC 296-806-46512.~~

~~Conduct periodic safe distance inspections~~

~~WAC 296-806-46514.~~

~~Supervise the safe distance program~~

~~WAC 296-806-46516.~~))

You must meet the requirements…	in this section:
Provide auxiliary safety aids on press brakes	WAC 296-806-46502
Safeguard the point of operation on press brakes	WAC 296-806-46504

((~~GENERAL REQUIREMENTS FOR PRESS BRAKES~~))

AMENDATORY SECTION (Amending WSR 04-14-028, filed 6/29/04, effective 1/1/05)

WAC 296-806-46502 Provide auxiliary safety aids on press brakes.

((~~IMPORTANT:~~)) **Important:**

This rule applies if the safeguarding method prevents the operator from holding the work piece during the closing of the stroke.

((~~You must:~~

~~•~~)) You must provide one of the following auxiliary safety aids that will allow operators to remove their hands from the work during the closing of the stroke:

((~~–~~)) (1) Work supporting devices.

((~~–~~)) (2) Magnetic material-position gages.

AMENDATORY SECTION (Amending WSR 04-14-028, filed 6/29/04, effective 1/1/05)

WAC 296-806-46504 Safeguard the point of operation on press brakes. ((~~You must:~~

~~•~~)) You must safeguard the point of operation on press brakes by at least one of the following:

((~~–~~)) (1) Physical guards.

((~~–~~)) (2) Devices.

((~~–~~)) (3) One-quarter inch maximum die opening.

((~~–~~)) (4) Safe distance safeguarding if **all** of the following apply:

((~~■~~)) (a) Physical barriers and devices such as two-hand controls, holdouts, restraints, and presence sensors, are demonstrated to not be feasible.

((~~■~~)) (b) This safeguarding method is only for one-time fabrication, custom made parts, or small quantity runs of no more than four hours per month.

((~~■~~)) (c) A safety program is provided that includes safe work procedures, training, and supervision to make sure work is performed using safe distance measures.

((■)) (d) There is no workplace record of injuries from failing to maintain a safe distance.

((~~SAFE DISTANCE SAFEGUARDING~~))

NEW SECTION

WAC 296-806-46505 Safe distance safeguarding.

You must meet the requirements…	in this section:
Follow this requirement when using safe distance safeguarding	WAC 296-806-46506
Develop a safe distance safeguarding program for press brakes	WAC 296-806-46508
Follow these requirements for safe distance training for press brakes	WAC 296-806-46510
Require safe distance retraining for press brake operations	WAC 296-806-46512
Conduct periodic safe distance inspections on press brakes	WAC 296-806-46514
Supervise the safe distance program for press brakes	WAC 296-806-46516

AMENDATORY SECTION (Amending WSR 04-14-028, filed 6/29/04, effective 1/1/05)

WAC 296-806-46506 Follow this requirement when using safe distance safeguarding. ((~~You must:~~

~~•~~)) You must make sure employees position themselves no closer than necessary and never closer than four inches from the power press brake point of operation.

AMENDATORY SECTION (Amending WSR 04-14-028, filed 6/29/04, effective 1/1/05)

WAC 296-806-46508 Develop a safe distance safeguarding program for press brakes. ((~~You must:~~

~~•~~)) You must develop, document, and use an effective safe distance safeguarding program. ((—)) Include methods for maintaining the minimum safe distance requirements in, Follow this requirement when using safe distance safeguarding, WAC 296-806-46506.

AMENDATORY SECTION (Amending WSR 04-14-028, filed 6/29/04, effective 1/1/05)

WAC 296-806-46510 Follow these requirements for safe distance training for press brakes. ((~~You must:~~))

(1) You must train your employees in the safe distance safeguarding program and include **all** of the following:

((~~•~~)) (a) The need for safety awareness between the power press brake operator and, when required, the helper.

((~~•~~)) (b) The purpose and function of operating controls, operating mode controls, die space height adjustment positions, and other brake controls.

((~~•~~)) (c) The hazards of placing any parts of the body into the point of operation.

((~~•~~)) (d) The hazards related to each specific work piece bending operation.

((~~•~~)) (e) The purpose and function of hand-feeding tools.

((~~•~~)) (f) The dangers of unsafe work practices, inattention, horseplay, and misuse of equipment.

((~~•~~)) (g) The importance of reporting unsafe conditions immediately to the supervisor.

(2) You must make sure employees are proficient in safe distance safeguarding after training, and follow both:

((~~•~~)) (a) Safe-operating instructions and recommendations of power press brake manufacturers; ((~~AND~~

~~•~~)) and

(b) Industry-recognized safe working practices for power press brakes.

AMENDATORY SECTION (Amending WSR 04-14-028, filed 6/29/04, effective 1/1/05)

WAC 296-806-46512 Require safe distance retraining for press brake operations. ((~~You must:~~))

(1) You must require safe distance retraining when employees either:

((~~•~~)) (a) Are seen operating the power press brake in an unsafe manner; ((~~OR~~

~~•~~)) or

(b) Fail to use safe distance procedures.

(2) You must require safe distance retraining when conditions in the workplace change that can affect safe operation of the power press brakes, such as introducing new or revised control methods and procedures.

AMENDATORY SECTION (Amending WSR 04-14-028, filed 6/29/04, effective 1/1/05)

WAC 296-806-46514 Conduct periodic safe distance inspections on press brakes. ((~~You must:~~))

(1) You must conduct periodic inspections of safe distance procedures at least annually to make sure that established procedures are being followed.

(2) You must make sure inspections are performed by a trained person who is **not** the person using the safe distance procedure.

(3) You must identify **all** of the following during safe distance procedure inspections:

((~~•~~)) (a) The date of the inspection.

((~~•~~)) (b) The person performing the inspection.

((~~•~~)) (c) The power press brake for which you are using the procedures.

((~~•~~)) (d) Any deviations or inadequacies with procedures and requirements.

((~~•~~)) (e) Joint reviews with each trained employee about their responsibilities under the safe distance program.

AMENDATORY SECTION (Amending WSR 04-14-028, filed 6/29/04, effective 1/1/05)

WAC 296-806-46516 Supervise the safe distance program for press brakes. ((~~You must:~~

~~•~~)) You must provide adequate supervision to make sure that:

((–)) (1) Only trained employees operate power press brakes.

((–)) (2) Employees use work practices learned in your training program.

((–)) (3) Periodic safe distance inspections are conducted as outlined in, Conduct periodic safe distance inspections on press brakes, WAC 296-806-46514.

((–)) (4) Any deviations from, or inadequacies in, program procedures or work practices are promptly corrected.

((–)) (5) Designated safeguarding means are used, installed, and functioning properly.

((–)) (6) Recommended hand-feeding tools are used, when needed.

((–)) (7) To require retraining and other appropriate corrective action when necessary.

((~~ROLL-FORMING AND BENDING MACHINES~~))

AMENDATORY SECTION (Amending WSR 04-14-028, filed 6/29/04, effective 1/1/05)

WAC 296-806-470 ((~~Summary.~~)) Roll-forming and bending machines. Summary

(1) In addition to the requirements in this section, you need to refer to the following sections of this chapter in order to fully protect your employees from machine hazards: ((~~•~~)) Requirements for all machines, WAC 296-806-200 and 296-806-300.

(2) This section applies to power driven roll-forming and bending machines that change the shape or the direction of materials by using rolls, rotary forming dies, and associated tooling.

Your responsibility:

To protect employees from hazards associated with roll-forming and bending machines.

((~~**You must:**~~
~~Follow these requirements for machine initiation WAC 296-806-47002.~~
~~Safeguard nip points on roll-forming and bending machines WAC 296-806-47004.~~))

You must meet the requirements…	**in this section:**
Follow these requirements for machine initiation	WAC 296-806-47002
Safeguard nip points on roll-forming and bending machines	WAC 296-806-47004

AMENDATORY SECTION (Amending WSR 04-14-028, filed 6/29/04, effective 1/1/05)

WAC 296-806-47002 Follow these requirements for machine initiation. ((~~**You must:**~~

~~•~~)) (1) You must make sure all of the following occur before starting machines:

((–)) (a) Select "normal" operation mode.

((–)) (b) Safeguards are in place and functioning.

((–)) (c) No workers are within the hazard zones.

((–)) (d) Other proper work practices are followed.

((~~•~~)) (2) You must make sure in the "jog mode," the machine function is initiated by the operator either:

((–)) (a) During set-up; ((~~**OR**~~

–)) or

(b) By threading the material through the forming rolls.

((~~•~~)) (3) Make sure only assigned test employees perform machine testing and start-up.

AMENDATORY SECTION (Amending WSR 04-14-028, filed 6/29/04, effective 1/1/05)

WAC 296-806-47004 Safeguard nip points of roll-forming and bending machines. ((~~You must:~~

~~•~~)) (1) You must safeguard in-running nip points on roll-forming and bending machines with **at least one** of the following:

((–)) (a) A point-of-operation guard or device.

((–)) (b) An emergency stop device.

((■)) (2) You must an emergency stop device must be used when a point-of-operation guard or device is not feasible.

SANDING MACHINES

AMENDATORY SECTION (Amending WSR 04-14-028, filed 6/29/04, effective 1/1/05)

WAC 296-806-475 ((~~Summary.~~)) Sanding machines.

Summary

(1) In addition to the requirements in this section, you need to refer to the following sections of this chapter in order to fully protect your employees from machine hazards:

((~~•~~)) Requirements for all machines, WAC 296-806-200 and 296-806-300.

(2) This section applies to sanding machines that remove material from stock with an abrasive sanding surface such as a belt, disk, or drum.

((~~Exemption:~~)) EXEMPTION:	This section does not apply to hand-held sanders. See, Portable power tools, chapter 296-807 WAC, for requirements that apply to hand-held tools.
Reference:	((•)) If you have multiple specific machines and operations in your workplace, you need to follow all requirements in WAC 296-806-400 that apply. ((–)) For example, if you use sanding machines and saws and cutting heads, you need to refer to both of these sections. ((•)) In addition to the requirements in this section, you need to refer to the following sections of this chapter in order to fully protect your employees from machine hazards: ((–)) 1. WAC 296-806-200, Requirements for all machines. ((–)) 2. WAC 296-806-300, Requirements for machine parts. ((•)) See chapter 296-807 WAC, Portable power tools, for requirements that apply to hand-held sanders.

Your responsibility:

To protect employees from hazards associated with drum, disk, and belt sanders.

((~~You must:~~

~~Guard drum sanders~~

~~WAC 296-806-47502.~~

~~Guard disk sanders~~

~~WAC 296-806-47504.~~

~~Guard belt sanders~~

~~WAC 296-806-47506.~~

~~Follow these requirements for feed roll guarding~~

~~WAC 296-806-47508.~~))

You must meet the requirements…	in this section:
Guard drum sanders	WAC 296-806-47502
Guard disk sanders	WAC 296-806-47504
Guard belt sanders	WAC 296-806-47506
Follow these requirements for feed roll guarding	WAC 296-806-47508

AMENDATORY SECTION (Amending WSR 07-05-062, filed 2/20/07, effective 4/1/07)

WAC 296-806-47502 Guard drum sanders. ((~~You must:~~

~~•~~)) You must make sure drum sanders have one of the following to enclose that part of the drum not used to work on the material:

((~~–~~)) (1) Guard.

((~~–~~)) (2) Exhaust hood.

Reference: Exhaust hoods are required on sanders when dust levels exceed exposure limits. See chapter 296-841 WAC, Airborne contaminants.

((~~Exemption:~~)) EXEMPTION: When a table is used for the application of material to be finished, you do not need to enclose the portion of the drum above the table that is necessary to do the work.

AMENDATORY SECTION (Amending WSR 04-14-028, filed 6/29/04, effective 1/1/05)

WAC 296-806-47504 Guard disk sanders. ((~~You must:~~

~~•~~)) You must make sure disk sanders have an exhaust hood, when required, or a guard that encloses the part of the disk not used to work on the material.

((~~Exemption:~~)) EXEMPTION: When a table is used for the application of material to be finished, you do not need to enclose the portion of the disk above the table that is necessary to do the work.

AMENDATORY SECTION (Amending WSR 04-14-028, filed 6/29/04, effective 1/1/05)

WAC 296-806-47506 Guard belt sanders. ((~~You must:~~

~~•~~)) You must protect the operator by guarding:

((~~–~~)) (1) Nip points where the sanding belt runs on the pulleys.

((~~–~~)) (2) The unused run of the sanding belt.

AMENDATORY SECTION (Amending WSR 04-14-028, filed 6/29/04, effective 1/1/05)

WAC 296-806-47508 Follow these requirements for feed roll guarding. ((~~You must:~~

~~•~~)) (1) You must make sure that feed rolls have a hood or guard to prevent the operator's hands from coming in contact with the in-running rolls at any point.

((~~•~~)) (2) You must make sure that the guard meets **ALL** of the following:

((~~–~~)) (a) Is constructed of heavy material, preferably metal.

((~~–~~)) (b) The bottom of the guard comes down to within three-eighths inch of the plane formed by the bottom or working surfaces of the feed rolls. ((■)) When the three-eighths inch distance is increased to three-quarter inch, the lead edge of the hood must be extended to five and one-half inches or more in front of the nip point between the front roll and the work.

((~~SAWS AND CUTTING HEADS~~))

AMENDATORY SECTION (Amending WSR 04-14-028, filed 6/29/04, effective 1/1/05)

WAC 296-806-480 ((~~Summary.~~)) Saws and cutting heads.

Summary

If your specific machine or operation is not listed here, then be sure to follow any of the following requirements that apply:

((~~•~~)) (1) General requirements for all saws and cutting heads in this section.

((~~•~~)) (2) General requirements for all saws in this section.

((~~•~~)) (3) General requirements for all cutting heads in this section.

((~~•~~)) (4) "Requirements for all machines" found in this chapter, WAC 296-806-200 and 296-806-300.

Reference: For requirements on hand-held tools, see Portable power tools, chapter 296-807 WAC.

This section applies to fixed machines using saws or cutting heads that are used on any material.

Your responsibility:

To make sure machines using saws and cutting heads meet these requirements.

((~~**You must:**~~

~~**GENERAL REQUIREMENTS FOR ALL SAWS AND CUTTING HEADS**~~

~~Protect employees using saws and cutting heads~~

~~WAC 296-806-48002.~~

~~Make sure saws and cutting heads are sharpened and tensioned by qualified people~~

~~WAC 296-806-48004.~~

~~**SAWS**~~

~~**General Requirements for All Saws**~~

~~Make sure saws are safe to use~~

~~WAC 296-806-48006.~~

~~**Requirements for All Circular Saws**~~

~~Make sure all circular saws meet these requirements~~
~~WAC 296-806-48008.~~
~~Make sure circular saw gages meet these requirements~~
~~WAC 296-806-48010.~~
~~Guard hand-fed circular table saws~~
~~WAC 296-806-48012.~~
~~Provide kickback protection for employees using hand-fed circular table ripsaws when ripping wood~~
~~WAC 296-806-48014.~~
~~Safeguard self-feed circular saws~~
~~WAC 296-806-48016.~~
~~Provide kickback protection for self-feed circular ripsaws when ripping wood~~
~~WAC 296-806-48018.~~
~~Guard circular resaws~~
~~WAC 296-806-48020.~~
~~Provide spreaders for circular resaws~~
~~WAC 296-806-48022.~~
~~**Requirements for Specific Circular Saws**~~
~~Protect employees from automatic saw hazards~~
~~WAC 296-806-48024.~~
~~Guard inverted swing (jump) saws~~
~~WAC 296-806-48026.~~
~~Guard miter saws~~
~~WAC 296-806-48028.~~
~~Guard radial saws~~
~~WAC 296-806-48030.~~
~~Limit the travel of radial saws~~
~~WAC 296-806-48032.~~
~~Provide kickback protection for radial saws used for ripping wood~~
~~WAC 296-806-48034.~~
~~Guard revolving double arbor saws~~
~~WAC 296-806-48036.~~
~~Guard swing saws~~
~~WAC 296-806-48038.~~
~~Limit the travel of swing saws~~
~~WAC 296-806-48040.~~
~~**Requirements for Band Saws and Drag Saws**~~
~~Make sure bandsaws meet these requirements~~
~~WAC 296-806-48042.~~
~~Protect employees from drag saw hazards~~
~~WAC 296-806-48044.~~
~~**CUTTING HEADS**~~
~~**General Requirements for All Cutting Heads**~~
~~Maintain and balance knives and cutting heads~~
~~WAC 296-806-48046.~~
~~**BORING AND MORTISING MACHINES**~~
~~Make sure boring and mortising machines meet these requirements~~
~~WAC 296-806-48048.~~
~~**CHIPPER AND HOG MILLS**~~
~~Follow these requirements for chipper mills~~
~~WAC 296-806-48050.~~
~~Follow these requirements for hog mills~~
~~WAC 296-806-48052.~~
~~Protect employees from falling into chipper and hog mills~~
~~WAC 296-806-48054.~~
~~**JOINTERS**~~

~~Make sure jointers with horizontal cutting heads meet these requirements~~
~~WAC 296-806-48056.~~
~~Guard horizontal cutting heads on hand-fed jointers~~
~~WAC 296-806-48058.~~
~~Guard vertical cutting heads on jointers~~
~~WAC 296-806-48060.~~
~~MOLDING, STICKING AND MATCHING MACHINES~~
~~Make sure molding, sticking and matching machines meet these requirements~~
~~WAC 296-806-48062.~~
~~PANEL RAISERS AND OTHER SIMILAR MACHINES~~
~~Guard hand-fed panel raisers and other similar machines~~
~~WAC 296-806-48064.~~
~~PLANERS~~
~~Make sure planers with a horizontal cutting head meet these requirements~~
~~WAC 296-806-48066.~~
~~Guard planers~~
~~WAC 296-806-48068.~~
~~Guard planer feed rolls~~
~~WAC 296-806-48070.~~
~~Provide kickback protection on planers running stock of varied thicknesses~~
~~WAC 296-806-48072.~~
~~SHAPERS~~
~~Make sure shapers meet these requirements~~
~~WAC 296-806-48074.~~
~~TENONING MACHINES~~
~~Guard tenoning machines feed chains and sprockets~~
~~WAC 296-806-48076.~~
~~Guard tenoning machines~~
~~WAC 296-806-48078.~~
~~VENEER MACHINERY~~
~~Guard veneer cutters and wringer knives~~
~~WAC 296-806-48080.~~
~~Guard veneer clippers~~
~~WAC 296-806-48082.~~
~~Follow these requirements for guarding guillotine cutters~~
~~WAC 296-806-48084.~~
~~Provide mechanisms to stop power-driven guillotine cutters~~
~~WAC 296-806-48086.~~
~~Prohibit riders on veneer slicer carriages~~
~~WAC 296-806-48088.~~))

Requirements for this topic…	**begin with this section:**
GENERAL REQUIREMENTS FOR ALL SAWS AND CUTTING HEADS	WAC 296-806-48002
SAWS	
General Requirements for All Saws	WAC 296-806-48006
Requirements for All Circular Saws	WAC 296-806-48008

Requirements for this topic…	**begin with this section:**
Requirements for Specific Circular Saws	WAC 296-806-48024
Requirements for Band Saws and Drag Saws	WAC 296-806-48042
CUTTING HEADS	
General Requirements for All Cutting Heads	WAC 296-806-48046
BORING AND MORTISING MACHINES	WAC 296-806-48048
CHIPPER AND HOG MILLS	WAC 296-806-48050
JOINTERS	WAC 296-806-48056
MOLDING, STICKING AND MATCHING MACHINES	WAC 296-806-48062
PANEL RAISERS AND OTHER SIMILAR MACHINES	WAC 296-806-48064
PLANERS	WAC 296-806-48066
SHAPERS	WAC 296-806-48074
TENONING MACHINES	WAC 296-806-48076
VENEER MACHINERY	WAC 296-806-48080
SEWING MACHINES	WAC 296-806-48502

GENERAL REQUIREMENTS FOR ALL SAWS AND CUTTING HEADS

NEW SECTION

WAC 296-806-48001 General requirements for all saws and cutting heads.

You must meet the requirements…	in this section:
Protect employees using saws and cutting heads	WAC 296-806-48002
Make sure saws and cutting heads are sharpened and tensioned by qualified people	WAC 296-806-48005

AMENDATORY SECTION (Amending WSR 04-14-028, filed 6/29/04, effective 1/1/05)

WAC 296-806-48002 Protect employees using saws and cutting heads. ((~~You must:~~

~~•~~)) (1) You must provide safeguarding to protect employees from the hazards of feed rolls.

((~~•~~)) (2) You must provide types and sizes of push sticks or push blocks that are suitable for the work being done.

((~~•~~)) (3) You must use a comb (featherboard) or a suitable jig to protect employees when a standard guard cannot be used.

Note: Operations where you may need a comb or jig include:
((•)) 1. Dadoing.
((•)) 2. Grooving.
((•)) 3. Jointing.
((•)) 4. Moulding.
((•)) 5. Rabbeting.

AMENDATORY SECTION (Amending WSR 04-14-028, filed 6/29/04, effective 1/1/05)

WAC 296-806-48004 Make sure saws and cutting heads are sharpened and tensioned by qualified people. ((~~You must:~~

~~•~~)) You must make sure people who sharpen or tension saw blades or cutters have demonstrated skill in this area.

SAWS
General Requirements for All Saws

NEW SECTION

WAC 296-806-48005 General requirements for all saws.

You must meet the requirements…	in this section:
Make sure saws are safe to use	WAC 296-806-48006

AMENDATORY SECTION (Amending WSR 04-14-028, filed 6/29/04, effective 1/1/05)

WAC 296-806-48006 Make sure saws are safe to use. ((~~You must:~~ ~~•~~)) (1) You must immediately remove from service a saw that has **any of the following** problems:

((–)) (a) Cracked.

((–)) (b) Dull.

((–)) (c) Badly set.

((–)) (d) Improperly filed.

((–)) (e) Improperly tensioned.

((~~•~~)) (2) You must immediately clean any saw where gum has begun to stick on the sides.

((~~•~~)) (3) You must eliminate unintended fence and table movement during operation.

((~~•~~)) (4) You must keep hinged tables and fences firmly secured and in true alignment for all positions.

Requirements for All Circular Saws

NEW SECTION

WAC 296-806-48007 Requirements for all circular saws.

You must meet the requirements…	in this section:
Make sure all circular saws meet these requirements	WAC 296-806-48008
Make sure circular saw gages meet these requirements	WAC 296-806-48010
Guard hand-fed circular table saws	WAC 296-806-48012
Provide kickback protection for employees using hand-fed circular table ripsaws when ripping wood products	WAC 296-806-48014
Safeguard self-feed circular saws	WAC 296-806-48016

You must meet the requirements…	in this section:
Provide kickback protection for self-feed circular ripsaws when ripping wood products	WAC 296-806-48018
Guard circular resaws	WAC 296-806-48020
Provide spreaders for circular resaws	WAC 296-806-48022

AMENDATORY SECTION (Amending WSR 04-14-028, filed 6/29/04, effective 1/1/05)

WAC 296-806-48008 Make sure all circular saws meet these requirements. ((~~You must:~~

~~•~~)) (1) You must protect employees from contacting the portion of the saw beneath or behind the table by covering it with either:

((~~–~~)) (a) An exhaust hood, if one is required; ((~~OR~~

~~–~~)) or

(b) A guard.

((~~•~~)) (2) You must prohibit workers from inserting wedges between the saw disk and the collar to form a wobble saw.

AMENDATORY SECTION (Amending WSR 04-14-028, filed 6/29/04, effective 1/1/05)

WAC 296-806-48010 Make sure circular saw gages meet these requirements. ((~~You must:~~

~~•~~)) You must make sure circular saw gages slide in grooves or tracks that are accurately machined to maintain exact alignment with the saw for all positions of the guide.

Note: Circular saw gages are also referred to as miter or positioning gages.

AMENDATORY SECTION (Amending WSR 04-14-028, filed 6/29/04, effective 1/1/05)

WAC 296-806-48012 Safeguard hand-fed circular table saws. ((~~You must:~~

~~•~~)) (1) You must guard each hand-fed circular saw with a hood that completely encloses both the portion of the saw that is above both:

((~~–~~)) (a) The table; ((~~AND~~

~~–~~)) and

(b) The material being cut.

((~~•~~)) (2) You must make sure the hood is designed and constructed to do **all** of the following:

((~~–~~)) (a) Protect the operator from flying splinters and broken saw teeth.

((–)) (b) Strong enough to resist damage from reasonable operation, adjustments, and handling.

((–)) (c) Made of material soft enough to not break saw teeth.

Note: Hoods should be made of material that:
((•)) 1. Does not shatter when broken.
((•)) 2. Is not explosive.
((•)) 3. Is less combustible than wood.

((~~**You must:**~~
~~•~~)) (3) You must mount the hood so it does **all** of the following:

((–)) (a) Operates positively and reliably.

((–)) (b) Maintains true alignment with the saw.

((–)) (c) Resists any side thrust or force that could throw it out of line.

((~~•~~)) (4) You must make sure the hood:

((–)) (a) Allows the material to be inserted or sawed without any considerable resistance; ((~~**AND**~~
~~–~~)) and

(b) Does one of the following:

((■)) (i) Automatically remains in contact with the material being cut; ((~~**OR**~~
~~■~~)) or

(ii) Is manually adjusted to within one-quarter inch of the material being cut.

((~~Exemption:~~))
EXEMPTION: Saws may be guarded with a fixed enclosure, fixed barrier guard, or a manually adjusted guard when specific conditions prevent using a standard automatic adjusting guard. Alternative guards have to both:
((•)) 1. Provide protection equivalent to a standard automatic adjusting guard; ((~~**AND**~~)) and
((•)) 2. Be used according to the manufacturer's instructions with sufficient supervision to comply with this requirement.

AMENDATORY SECTION (Amending WSR 04-14-028, filed 6/29/04, effective 1/1/05)

WAC 296-806-48014 Provide kickback protection for employees using hand-fed circular table ripsaws when ripping wood products. ((~~**Definition:**~~

~~*Ripping* is a sawing operation made:~~

~~• Through the thickness of the work piece with the grain of natural wood;~~

~~• Along the long dimension of a rectangular work piece;~~

~~**AND**~~

~~• Usually parallel to that edge on reconstituted wood products.~~

~~This can also be described as cutting stock to width. Two or more pieces result from the operation.~~

~~**You must:**~~

~~•~~)) (1) You must provide a spreader or riving knife that is:

((–)) (a) Made of hard-tempered steel or its equivalent.

((–)) (b) Thinner than the saw kerf.

((–)) (c) Wide enough to provide sufficient stiffness and rigidity to resist any reasonable side thrust or blow that could bend or throw it out of position.

((–)) (d) Attached so it remains in true alignment with the saw when the saw or table is tilted.

Note: ((•)) The spreader or riving knife should:
((–)) 1. Prevent material from either squeezing the saw or being thrown back at the operator.
((–)) 2. Be placed so there is one-half inch or less space between it and the back of the saw when the largest saw is mounted in the machine.

((~~Exemption:~~))
EXEMPTION: You do not have to provide a spreader or riving knife when grooving, dadoing, or rabbeting. When you finish these operations, replace the spreader immediately.

((~~You must:~~

~~•~~)) (2) You must provide nonkickback fingers or dogs that are:

((–)) (a) Located so they prevent the saw from either picking up the material or throwing the material back towards the operator.

((–)) (b) Designed to hold any thickness of material being cut.

Note: Kickbacks occur when a saw seizes the stock and hurls it back at the operator. This can happen when the stock twists and binds against the side of the blades or is caught in the teeth. Kickbacks occur more often when cutting parallel to the wood grain (ripping) than when cross cutting. Common contributors to kickbacks include:

((•)) 1. A blade that is not sharpened.

((•)) 2. A blade set at an incorrect height.

((•)) 3. Poor quality lumber, such as frozen lumber, lumber with many knots, or foreign objects, such as nails.

AMENDATORY SECTION (Amending WSR 04-14-028, filed 6/29/04, effective 1/1/05)

WAC 296-806-48016 Safeguard self-feed circular saws. ((~~You must:~~

~~•~~)) (1) You must provide saws and feed rolls with a hood or guard to protect the operator from contacting the in-running rolls.

((~~•~~)) (2) You must make sure the guard is constructed of heavy material, preferably metal.

((~~•~~)) (3) You must make sure the distance between the bottom of the guard and the plane formed by the bottom or working surface of the feed rolls meets the requirements of Table 200-1, Largest Allowable Guard Opening, in WAC 296-806-20042.

AMENDATORY SECTION (Amending WSR 04-14-028, filed 6/29/04, effective 1/1/05)

WAC 296-806-48018 Provide kickback protection for self-feed circular ripsaws when ripping wood products. ((~~You must:~~

~~•~~)) You must provide saws with sectional nonkickback fingers that meet **all** of the following requirements:

((–)) (1) They cover the full width of the feed roll.

((–)) (2) They are located in front of the saw.

((–)) (3) They are arranged so they keep continuous contact with the material being fed.

AMENDATORY SECTION (Amending WSR 04-14-028, filed 6/29/04, effective 1/1/05)

WAC 296-806-48020 Guard circular resaws. ((~~You must:~~

~~•~~)) You must provide each circular resaw with a metal hood or shield that is:

((–)) (1) Located above the saw.

((–)) (2) Designed to protect the operator from flying splinters or broken saw teeth.

AMENDATORY SECTION (Amending WSR 04-14-028, filed 6/29/04, effective 1/1/05)

WAC 296-806-48022 Provide spreaders for circular resaws.

((~~Exemption:~~)) This requirement does not apply to self-feed saws with a roller or wheel at the back of the saw.
EXEMPTION:

((~~You must:~~
~~•~~)) You must provide a spreader that is **all** of the following:
((~~-~~)) (1) Securely fastened behind the saw.
((~~-~~)) (2) Slightly thinner than the saw kerf.
((~~-~~)) (3) Slightly thicker than the saw disk.

Requirements for Specific Circular Saws

NEW SECTION

WAC 296-806-48023 Requirements for specific circular saws.

You must meet the requirements…	in this section:
Protect employees from automatic saw hazards	WAC 296-806-48024
Guard inverted swing (jump) saws	WAC 296-806-48026
Guard miter saws	WAC 296-806-48028
Guard radial saws	WAC 296-806-48030
Limit the travel of radial saws	WAC 296-806-48032
Provide kickback protection for radial saws used for ripping wood products	WAC 296-806-48034
Guard revolving double arbor saws	WAC 296-806-48036
Guard swing saws	WAC 296-806-48038
Limit the travel of swing saws	WAC 296-806-48040

AMENDATORY SECTION (Amending WSR 04-14-028, filed 6/29/04, effective 1/1/05)

WAC 296-806-48024 Protect employees from automatic saw hazards.
((~~You must:~~

~~•~~)) You must make sure automatic saws that stroke continuously without the operator controlling each stroke are **not** used where employees could be exposed to((~~:~~)) saw hazards during operations such as loading, clamping, cutting, or unloading.

AMENDATORY SECTION (Amending WSR 04-14-028, filed 6/29/04, effective 1/1/05)

WAC 296-806-48026 Guard inverted swing (jump) saws. ((~~**You must:**~~))

(1) You must guard jump saws with a hood that both:

((~~•~~)) (a) Covers the part of the saw that is exposed above the top of the table or above the material being cut; ((~~**AND**~~

~~•~~)) and

(b) Automatically adjusts to the thickness of the material being cut and remains in contact with it.

(2) You must provide a holding device that will prevent stock from moving while cutting materials.

(3) You must provide warning signs, stickers, or placards when the pinching hazard created by the holding device cannot be eliminated by design.

(4) You must provide the following for automatically fed jump saws.

((~~•~~)) (a) Place guards over the roller conveyor to prevent persons from walking into or over the saw.

((~~•~~)) (b) Enclose jump saws when below the table or roller conveyor and not in actual use.

((~~•~~)) (c) Install a positive stop to prevent the saw from passing the front edge of the roller conveyor or table.

((~~•~~)) (d) Make sure the throat in the table or roller conveyor is only wide enough to permit unobstructed operation of the saw.

AMENDATORY SECTION (Amending WSR 04-14-028, filed 6/29/04, effective 1/1/05)

WAC 296-806-48028 Guard miter saws.

((~~**IMPORTANT:**~~)) **Important:**

Miter saws include:

((~~•~~)) 1. Miter.

((~~•~~)) 2. Compound miter.

((~~•~~)) 3. Slide miter.

((~~•~~)) 4. Compound slide miter.

((~~**You must:**~~))

(1) You must guard miter saws with an upper hood that completely encloses the upper half of the blade.

(2) You must provide a method to protect employees from contacting the blade underneath the table while in its recommended carrying position.

(3) You must guard the lower blade:

((~~•~~)) (a) By making sure the teeth are guarded at least three-quarters of an inch beyond the root of the teeth, toward the center of

the blade, except for a maximum forty-five degree exposure of quadrant C when in the full retract position. See Illustration 480-1, Miter Saw Guarding.

((•)) (b) With a retractable guard that cannot be locked in any position.

Illustration 480-1
Miter Saw Guarding

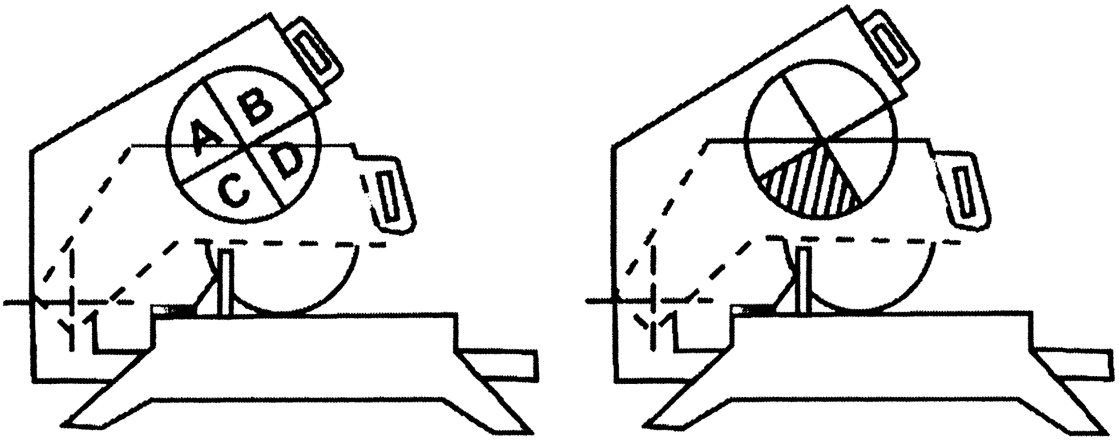

This illustration shows miter saws in full retract position, and quadrant C, where 45 degrees, or half of quadrant C may be exposed when in the full retract position.

AMENDATORY SECTION (Amending WSR 04-14-028, filed 6/29/04, effective 1/1/05)

WAC 296-806-48030 Guard radial saws. ((~~You must:~~

~~•~~)) (1) You must make sure the radial saw has a hood that does **all** of the following:

((–)) (a) Completely encloses the upper portion of the blade down to a point that includes the end of the saw arbor.

((–)) (b) Protects the operator from flying splinters and broken saw teeth.

((–)) (c) Deflects sawdust away from the operator.

((•)) (2) You must provide a lower blade guard that does **all** of the following (see Guard radial saws, illustration 480-2):

((–)) (a) Guards the sides of the lower exposed portion of the blade to its full diameter.

((–)) (b) Automatically adjusts to the thickness of the stock being cut.

((–)) (c) Remains in contact with the stock to provide the maximum protection possible for the operation being performed; ((~~OR~~

–)) or

(d) Is manually adjusted (wing) guard that:

((■)) (i) Is made of material strong enough to withstand the forces put on it.

((■)) (ii) Suggested materials include polycarbonates or expanded metal.

((■)) (iii) Has edges that are smooth so no hazards from the guard exist.

((■)) (iv) Extends a minimum of eight inches to both the front and arbor-end sides.

((■)) (v) Is adjustable in a vertical plane to the different thicknesses of stock so the gap is three-eighths inch or less between the bottom of the guard and the top of the stock.

((~~Exemption:~~)) **EXEMPTION:** Saws may be guarded with a fixed enclosure, fixed barrier guard, or a manually adjusted guard when specific conditions prevent using a standard, automatic adjusting guard. Alternative guards have to both:

((•)) 1. Provide protection equivalent to a standard automatic adjusting guard; **((~~AND~~))** and

((•)) 2. Be used according to the manufacturer's instructions with sufficient supervision to meet this requirement.

Illustration 480-2 Guard radial saws

A manually adjusted awareness barrier guard that extends 8 inches to the front and sides of the blade

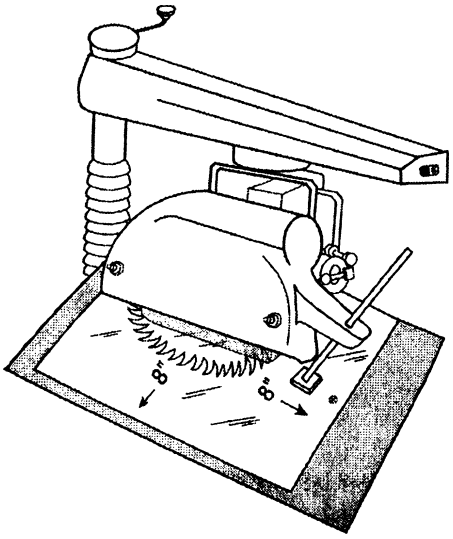

AMENDATORY SECTION (Amending WSR 04-14-028, filed 6/29/04, effective 1/1/05)

WAC 296-806-48032 Limit the travel of radial saws. ((~~You must:~~

~~•~~)) (1) You must provide an adjustable stop that prevents:

((–)) (a) Forward travel of the blade beyond the position necessary to complete the cut; ((~~AND~~

–)) and

(b) Any part of the saw blade from extending beyond the front edge of the work support table.

((~~•~~)) (2) You must install the saw so that the front end is slightly higher than the rear in order to cause the cutting head to return to the starting position when released by the operator.

((~~•~~)) (3) You must make sure the cutting head or carriage does **all** of the following:

((–)) (a) Returns gently to the rest or starting position when released by the operator.

((–)) (b) Does not bounce or recoil when reaching the rest or starting position.

((–)) (c) Remains in the rest or starting position.

AMENDATORY SECTION (Amending WSR 04-14-028, filed 6/29/04, effective 1/1/05)

WAC 296-806-48034 Provide kickback protection for radial saws used for ripping wood products. ((~~You must:~~

~~•~~)) (1) You must provide nonkickback fingers or dogs that are both:

((–)) (a) Located on both sides of the saw to resist the tendency of the saw to pick up material or throw it back toward the operator; ((~~AND~~

–)) and

(b) Designed to hold any thickness of material being cut.

((~~•~~)) (2) You must make sure when ripping or ploughing that you feed the material from the end where the blade teeth enter the upper guard, which is against the direction in which the saw turns. See, Ripping with a radial arm saw, illustration 480-3.

((~~•~~)) (3) You must make sure the direction of saw rotation is clearly marked on the hood.

((~~•~~)) (4) You must fasten a permanent label at the rear of the guard hood, at about the level of the arbor, where the blade teeth exit the upper hood during saw operation that:

((–)) (a) Reads, **"DANGER: DO NOT RIP OR PLOUGH FROM THIS END."**

((–)) (b) Is colored standard danger red.

((–)) (c) Is not less than one and one-half inches by three-quarters inch with standard proportional lettering.

((~~RIPPING WITH A RADIAL ARM SAW~~))

Illustration 480-3

Important requirements for ripping with a radial arm saw.

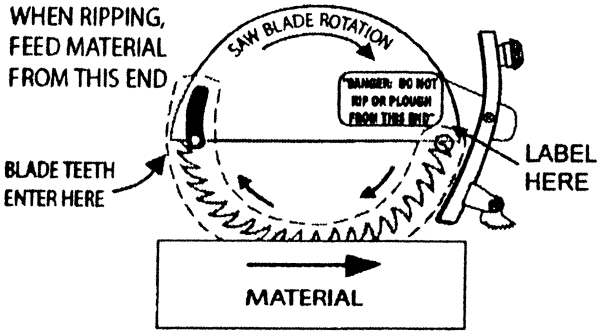

((~~**RIPPING**~~

~~**Illustration 480-3**~~

~~Important requirements for ripping with a radial arm saw.~~))

AMENDATORY SECTION (Amending WSR 04-14-028, filed 6/29/04, effective 1/1/05)

WAC 296-806-48036 Guard revolving double arbor saws. ((~~You must:~~

~~•~~)) You must guard each revolving double arbor saw with a hood that completely encloses the portion of the saw that is above both:

((–)) (1) The table; ((~~AND~~

–)) and
(2) The material being cut.

Note: Hoods should be made of material that:
((•)) 1. Does not shatter when broken.
((•)) 2. Is not explosive.
((•)) 3. Is less combustible than wood.

AMENDATORY SECTION (Amending WSR 04-14-028, filed 6/29/04, effective 1/1/05)

WAC 296-806-48038 Guard swing saws.

((~~IMPORTANT:~~)) **Important:**

This section applies to swing saws mounted above the table.

((~~You must:~~

~~•~~)) (1) You must provide saws with a hood that encloses **all** of the following:

((–)) (a) Upper half of the saw.

((–)) (b) Arbor end.

((–)) (c) Point of operation in all positions of the saw.

((~~•~~)) (2) You must make sure the hood protects operators from flying splinters and broken saw teeth.

((~~•~~)) (3) You must make sure the lower blade guard will automatically cover the lower portion of the blade by dropping on top of and remaining in contact with the table or the material being cut.

((~~Exemption:~~))
EXEMPTION: Saws may be guarded with a fixed enclosure, fixed barrier guard, or a manually adjusted guard when specific conditions prevent using a standard, automatic adjusting guard. Alternative guards have to:
((•)) 1. Provide protection equivalent to a standard automatic adjusting guard; **((~~AND~~))** and
((•)) 2. Be used according to the manufacturer's instructions with sufficient supervision to meet this requirement.

AMENDATORY SECTION (Amending WSR 04-14-028, filed 6/29/04, effective 1/1/05)

WAC 296-806-48040 Limit the travel of swing saws.

((~~IMPORTANT:~~)) **Important:**

This section applies to swing saws that are mounted above the table.

((~~You must:~~

~~•~~)) (1) You must provide saws with a device that:

((–)) (a) Automatically returns the saw to the back of the table when the saw is released at any point in its travel.

((–)) (b) Does not depend on a rope, cord, or spring to function properly.

((~~•~~)) (2) You must make sure devices that use a counterweight meets these requirements:

((–)) (a) The bolts supporting the bar and the counterweight use cotter pins.

((–)) (b) The counterweight is prevented from dropping by **one** of these methods:

((■)) (i) A bolt passing through both the bar and the counterweight.

((■)) (ii) A bolt through the extreme end of the bar.

((■)) (iii) A safety chain to hold it to the bar if the counterweight does not completely encircle the bar.

((•)) (3) You must provide limit chains or another equally effective device to prevent the saw from swinging either:

((–)) (a) Beyond the front or back edge of the table;((~~OR~~ –)) or

(b) Forward to a position where the gullets of the lowest saw teeth will rise above the table top.

Requirements for Band Saws and Drag Saws

NEW SECTION

WAC 296-806-48041 Requirements for band saws and drag saws.

You must meet the requirements…	in this section:
Make sure band saws meet these requirements	WAC 296-806-48042
Protect employees from drag saw hazards	WAC 296-806-48044

AMENDATORY SECTION (Amending WSR 04-14-028, filed 6/29/04, effective 1/1/05)

WAC 296-806-48042 Make sure band saws meet these requirements.

((~~You must:~~

~~•~~)) (1) You must enclose or guard all portions of the blade except for the working portion of the blade between the guide rolls and the table.

((•)) (2) You must make sure the guard for the portion of the blade between the sliding guide and the wheel guard meets these requirements:

((–)) (a) Protects the front and outer side of the blade.

((–)) (b) Is self-adjusting to move with the guide.

((–)) (c) Adjusts so the gap between the guide rolls and stock is as small as is practical.

((•)) (3) You must fully enclose band saw wheels with wheel guards that meet **both** of the following requirements:

((–)) (a) The outside periphery of the wheel enclosure is solid; ((~~AND~~ –)) and

(b) The front and back of the wheels are enclosed by solid material, wire mesh, or perforated metal.

((•)) (4) You must make sure the material used for wheel guards meets these requirements:

((–)) (a) Wire mesh and perforated metal guards:

((■)) (i) Are at least 0.037 inch (U.S. Gage No. 20) thick.

((■)) (ii) Have openings in them that are three-eighths inch or less.

((–)) (b) Solid material has strength and firmness equivalent to a wire mesh or perforated steel guard.

((•)) (5) You must make sure band saws have a tension control device to indicate the proper tension for standard saws used on the machine.

AMENDATORY SECTION (Amending WSR 04-14-028, filed 6/29/04, effective 1/1/05)

WAC 296-806-48044 Protect employees from drag saw hazards. ((~~You must:~~

~~•~~)) You must protect employees passing near a drag saw by either:

((–)) (1) Providing a four-foot clearance when the saw is at the extreme end of the stroke; ((~~OR~~

–)) or

(2) Enclosing the saw and its driving mechanism, if you cannot provide a four-foot clearance.

CUTTING HEADS
General Requirements for All Cutting Heads

NEW SECTION

WAC 296-806-48045 General requirements for all cutting heads.

You must meet the requirements…	in this section:
Maintain and balance knives and cutting heads	WAC 296-806-48046

AMENDATORY SECTION (Amending WSR 04-14-028, filed 6/29/04, effective 1/1/05)

WAC 296-806-48046 Maintain and balance knives and cutting heads. ((~~You must:~~

~~•~~)) (1) You must make sure knives and cutting heads are kept:

((–)) (a) Sharp.

((–)) (b) Properly adjusted.

((–)) (c) Firmly secured.

((•)) (2) You must make sure knives are properly balanced when two or more are used in one cutting head.

BORING AND MORTISING MACHINES

NEW SECTION

WAC 296-806-48047 Boring and mortising machines.

You must meet the requirements…	in this section:
Make sure boring and mortising machines meet these requirements	WAC 296-806-48048

AMENDATORY SECTION (Amending WSR 04-14-028, filed 6/29/04, effective 1/1/05)

WAC 296-806-48048 Make sure boring and mortising machines meet these requirements.

((~~Exemption:~~)) **EXEMPTION:** This section does not apply to drill presses, boring machines, or mortising machines if both of the following apply:

((•)) 1. The downward stroke of the chuck and bit is controlled manually by the operator; ((~~AND~~)) and
((•)) 2. The chuck and bit automatically rises to the start position when control is released.

((~~You must:~~
~~•~~)) (1) You must completely enclose universal joints on spindles of boring machines to prevent accidental contact by the operator.

((•)) (2) You must make sure you do not use safety bit chucks that have projecting set screws.

((•)) (3) You must enclose the top of the cutting chain and driving mechanism.

((•)) (4) You must prevent a counterweight, when used, from dropping by securing it to a bar by one of the following, or an equivalent method:

((~~- Securing it to a bar by one of the following:~~
■)) (a) A bolt passing through both the bar and the counterweight.

((■)) (b) A bolt through the extreme end of the bar.

((■)) (c) A safety chain to hold it to the bar if the counterweight does not completely encircle the bar; ((~~OR~~
–)) or

(d) Suspending it by a chain or wire rope and having it travel in a pipe or other suitable enclosure if it could fall and injure an employee.

Note: Boring bits should be provided with a guard that will enclose all portions of the bit and chuck above the material being worked.

CHIPPER AND HOG MILLS

NEW SECTION

WAC 296-806-48049 Chipper and hog mills.

You must meet the requirements…	in this section:
Follow these requirements for chipper mills	WAC 296-806-48050
Follow these requirements for hog mills	WAC 296-806-48052
Protect employees from falling into chipper and hog mills	WAC 296-806-48054

AMENDATORY SECTION (Amending WSR 04-14-028, filed 6/29/04, effective 1/1/05)

WAC 296-806-48050 Follow these requirements for chipper mills.

((~~Exemption:~~)) EXEMPTION: This section does not apply to mobile chippers.

Reference: Safety requirements for mobile chippers can be found in, Pruning, Repairing, Maintaining and Removing Trees and Cutting Brush, section 9.6, ANSI Z133.1-2000.

((~~You must:~~))

(1) You must arrange the feed system so the operator does not stand in direct line with the chipper blades or spout (hopper).

(2) You must protect the operator from chips or chunks being thrown out while feeding the machine.

(3) You must enclose the chipper spout to a height or distance of at least forty inches from the floor or the operator's station, whichever is higher.

(4) You must provide a mirror or other device to allow monitoring of material when the operator cannot readily observe the material being fed into the chipper.

AMENDATORY SECTION (Amending WSR 04-14-028, filed 6/29/04, effective 1/1/05)

WAC 296-806-48052 Follow these requirements for hog mills.

((~~You must:~~))

(1) You must make sure that feed chutes are at least forty inches from the knives or feed roll.

(2) You must provide baffles or other suitable safeguards to prevent material from being thrown from the hog mill.

AMENDATORY SECTION (Amending WSR 04-14-028, filed 6/29/04, effective 1/1/05)

WAC 296-806-48054 Protect employees from falling into chipper and hog mills. ((~~You must:~~

~~•~~)) You must protect employees working near the feed openings of chipper and hog mills from falling into the openings by providing **at least one** of the following:

((~~–~~)) (1) A safety belt (or harness) and a lifeline short enough to prevent workers from falling into the mill.

((~~–~~)) (2) Barriers or other types of protective guarding.

Reference: See, Railing, toeboards and cover specifications for requirements on guardrails used as barriers, WAC 296-24-75011.

JOINTERS

NEW SECTION

WAC 296-806-48055 Jointers.

You must meet the requirements…	in this section:
Make sure jointers with horizontal cutting heads meet these requirements	WAC 296-806-48056
Guard horizontal cutting heads on hand-fed jointers	WAC 296-806-48058
Guard vertical cutting heads on jointers	WAC 296-806-48060

AMENDATORY SECTION (Amending WSR 04-14-028, filed 6/29/04, effective 1/1/05)

WAC 296-806-48056 Make sure jointers with horizontal cutting heads meet these requirements. ((~~You must:~~

~~•~~)) (1) You must make sure the cutting head on hand-fed jointers is cylindrical:

((~~–~~)) (2) You must install and adjust the knife blade so it does not protrude more than one-eighth inch beyond the body of the head.

((~~•~~)) (3) You must make sure the opening in the table meets **all** of the following:

((–)) (a) Is kept as small as possible.

((–)) (b) The clearance between the edge of the rear table and the cutting head is not more than one-eighth inch.

((–)) (c) The table throat opening is not more than two and one-half inches when the tables are set or aligned with each other for zero cut.

AMENDATORY SECTION (Amending WSR 04-14-028, filed 6/29/04, effective 1/1/05)

WAC 296-806-48058 Guard horizontal cutting heads on hand-fed jointers. ((~~**You must:**~~

~~•~~)) (1) You must provide jointers with an automatic guard on the working side of the fence or gage that does **all** of the following:

((–)) (a) Covers all sections of the head.

((–)) (b) Effectively keeps the operator's hand from contacting the revolving knives.

((–)) (c) Automatically adjusts to cover the unused portion of the head.

((–)) (d) Remains in contact with the material at all times.

((~~•~~)) (2) You must provide jointers with a guard that covers the section of the head behind the gage or fence.

AMENDATORY SECTION (Amending WSR 04-14-028, filed 6/29/04, effective 1/1/05)

WAC 296-806-48060 Guard vertical cutting heads on jointers. ((~~**You must:**~~

~~•~~)) You must provide each jointer that has a vertical cutting head with an exhaust hood or other type of guard that completely encloses the revolving head except for a slot that is wide enough for the material being jointed.

MOLDING, STICKING AND MATCHING MACHINES

NEW SECTION

WAC 296-806-48061 Molding, sticking and matching machines.

You must meet the requirements…	in this section:
Make sure molding, sticking and matching machines meet these requirements	WAC 296-806-48062

AMENDATORY SECTION (Amending WSR 04-14-028, filed 6/29/04, effective 1/1/05)

WAC 296-806-48062 Make sure molding, sticking and matching machines meet these requirements. ((~~You must:~~

~~•~~)) (1) You must make sure all cutting heads, and saws if used, are covered by a guard that:

((~~–~~)) (a) Is metal.

((~~–~~)) (b) Forms all or part of the exhaust hood if an exhaust system is used.

((~~•~~)) (2) You must make sure a guard constructed from:

((~~–~~)) (a) Sheet metal is at least one-sixteenth inch thick.

((~~–~~)) (b) Cast iron is at least three-sixteenths inch thick.

((~~•~~)) (3) You must make sure feed rolls are guarded by a hood or other suitable guard that both:

((~~–~~)) (a) Prevents the operator's hand from contacting the in-running rolls at any point; ((~~AND~~

~~–~~)) and

(b) Is attached to the frame carrying the rolls so it adjusts for any thickness of stock.

PANEL RAISERS AND OTHER SIMILAR MACHINES

NEW SECTION

WAC 296-806-48063 Panel raisers and other similar machines.

You must meet the requirements…	in this section:
Guard hand-fed panel raisers and other similar machines	WAC 296-806-48064

AMENDATORY SECTION (Amending WSR 04-14-028, filed 6/29/04, effective 1/1/05)

WAC 296-806-48064 Guard hand-fed panel raisers and other similar machines. ((~~You must:~~

~~•~~)) You must guard the cutting heads of hand-fed panel raisers and other similar machines by enclosing the cutting head with either:

((~~–~~)) (1) A fixed guard such as a cage; ((~~OR~~

~~–~~)) or

(2) An adjustable guard designed to keep the operator's hand away from the cutting edge.

PLANERS

NEW SECTION

WAC 296-806-48065 Planers.

You must meet the requirements…	in this section:
Make sure planers with a horizontal cutting head meet these requirements	WAC 296-806-48066
Guard planers	WAC 296-806-48068
Guard planer feed rolls	WAC 296-806-48070
Provide kickback protection on planers running stock of varied thicknesses	WAC 296-806-48072

AMENDATORY SECTION (Amending WSR 04-14-028, filed 6/29/04, effective 1/1/05)

WAC 296-806-48066 Make sure planers with a horizontal cutting head meet these requirements. ((~~You must:~~

~~•~~)) (1) You must make sure the cutting head on hand-fed planers is cylindrical.

((~~–~~)) (2) You must install and adjust the knife blade so it does not extend more than one-eighth inch beyond the body of the head.

AMENDATORY SECTION (Amending WSR 04-14-028, filed 6/29/04, effective 1/1/05)

WAC 296-806-48068 Guard planers. ((~~You must:~~

~~•~~)) (1) You must make sure all cutting heads, and saws if used, are covered by a guard that:

((–)) (a) Is metal.

((–)) (b) Forms all or part of the exhaust hood if an exhaust system is used.

((~~•~~)) (2) You must make sure a guard constructed from:

((–)) (a) Sheet metal is at least one-sixteenth inch thick.

((–)) (b) Cast iron is at least three-sixteenths inch thick.

AMENDATORY SECTION (Amending WSR 04-14-028, filed 6/29/04, effective 1/1/05)

WAC 296-806-48070 Guard planer feed rolls. ((~~You must:~~

~~•~~)) You must make sure feed rolls are guarded by a hood or other suitable guard that:

((–)) (1) Prevents the operator's hand from contacting the in-running rolls at any point.

((–)) (2) Is attached to the frame carrying the rolls so it remains in adjustment for any thickness of stock.

AMENDATORY SECTION (Amending WSR 04-14-028, filed 6/29/04, effective 1/1/05)

WAC 296-806-48072 Provide kickback protection on planers running stock of varied thicknesses. ((~~You must:~~

~~•~~)) You must provide kickback protection on planers running stock of varied thicknesses at the same time by providing either:

((–)) (1) Sectional feed rolls that provide feeding contact pressure on the stock; ((~~OR~~

–)) or

(2) Suitable nonkickback fingers at the infeed end of each section.

Note: The sectional feed rolls need to have sufficient yield in their construction to provide contact pressure on((:–)) any thickness of stock the machine is capable of processing.

SHAPERS

NEW SECTION

WAC 296-806-48073 Shapers.

You must meet the requirements…	in this section:
Make sure shapers meet these requirements	WAC 296-806-48074

AMENDATORY SECTION (Amending WSR 04-14-028, filed 6/29/04, effective 1/1/05)

WAC 296-806-48074 Make sure shapers meet these requirements. ((~~You must:~~

~~•~~)) (1) You must guard the cutting head of the shaper by enclosing it with either:

((–)) (a) A fixed guard, such as a cage; ((~~OR~~

–)) or

(b) An adjustable guard designed to keep the operator's hand away from the cutting edge.

((~~•~~)) (2) You must make sure the diameter of a circular shaper guard is at least as large as the greatest diameter of the cutter.

Note: A warning device of leather or other material attached to the spindle is NOT an acceptable substitute for a guard.

((~~You must:~~

~~•~~)) (3) You must guard all sections of the cutting tool except for an opening to allow access to the work piece by the cutting tool.

Note: A ring guard is one means of satisfying the guarding requirement for cutting tools when involved in free hand or template shaping.

((~~You must:~~

~~•~~)) (4) You must make sure all double-spindle shapers have a spindle starting and stopping device for each spindle.

TENONING MACHINES

NEW SECTION

WAC 296-806-48075 Tenoning machines.

You must meet the requirements…	in this section:
Guard tenoning machine feed chains and sprockets	WAC 296-806-48076
Guard tenoning machines	WAC 296-806-48078

AMENDATORY SECTION (Amending WSR 04-14-028, filed 6/29/04, effective 1/1/05)

WAC 296-806-48076 Guard tenoning machine feed chains and sprockets. ((~~You must:~~

~~•~~)) You must guard feed chains and sprockets of all double-end tenoning machines by completely enclosing both of the following:

((~~–~~)) (1) All sprockets; ((~~AND~~

~~–~~)) and

(2) Portions of the chain that are not used for conveying stock.

AMENDATORY SECTION (Amending WSR 04-14-028, filed 6/29/04, effective 1/1/05)

WAC 296-806-48078 Guard tenoning machines. ((~~You must:~~

~~•~~)) (1) You must make sure all cutting heads, and saws if used, are covered by a metal guard that:

((~~–~~)) (a) Covers at least the unused part of the periphery of the cutting head.

((~~–~~)) (b) Forms all or part of the exhaust hood if an exhaust system is used.

((~~•~~)) (2) You must make sure a guard constructed from:

((~~–~~)) (a) Sheet metal is at least one-sixteenth inch thick.

((~~–~~)) (b) Cast iron is at least three-sixteenths inch thick.

VENEER MACHINES

NEW SECTION

WAC 296-806-48079 Veneer machines.

You must meet the requirements…	in this section:
Guard veneer cutters and wringer knives	WAC 296-806-48080
Guard veneer clippers	WAC 296-806-48082
Follow these requirements for guarding guillotine cutters	WAC 296-806-48084
Provide mechanisms to stop power-driven guillotine cutters	WAC 296-806-48086
Prohibit riders on veneer slicer carriages	WAC 296-806-48088

AMENDATORY SECTION (Amending WSR 04-14-028, filed 6/29/04, effective 1/1/05)

WAC 296-806-48080 Guard veneer cutters and wringer knives. ((~~You must:~~

~~•~~)) You must provide guards to prevent accidental contact with the front or rear knife edge.

AMENDATORY SECTION (Amending WSR 04-14-028, filed 6/29/04, effective 1/1/05)

WAC 296-806-48082 Guard veneer clippers. ((~~You must:~~

~~•~~)) You must make sure employees do not accidentally contact the knife edge of veneer clippers by providing either:

((–)) (1) An automatic feed; ((~~OR~~

–)) or

(2) Guarding at both the front and rear of the clippers.

AMENDATORY SECTION (Amending WSR 04-14-028, filed 6/29/04, effective 1/1/05)

WAC 296-806-48084 Follow these requirements for guarding guillotine cutters.

((~~Exemption:~~)) These requirements do not apply to continuous-feed trimmers.
EXEMPTION:

((~~You must:~~))

(1) You must provide **one** of the following to hand and foot powered guillotine cutters, so employees' hands cannot reach the cutting edge of the knife:

((~~•~~)) (a) Rods.

((~~•~~)) (b) Plates.

((~~•~~)) (c) Other satisfactory means of protection such as those outlined in, Safeguarding methods, WAC 296-806-20042 through 296-806-20058.

(2) You must provide power-driven guillotine veneer cutters with either of the following:

((~~•~~)) (a) Starting devices for each operator that require all of the following:

((–)) (i) Both hands activating controls at the same time to start the cutting motion;

((–)) (ii) At least one hand on a control during the complete stroke of the knife; ((~~OR~~

~~•~~)) or

(b) An automatic guard that does all of the following:

((–)) (i) Keeps the hands of the operator away from the danger zone every time the blade comes down.

((–)) (ii) Is used in combination with one-handed starting devices that require two separate movements of the device to start the cutting motion.

((–)) (iii) Is designed to return positively to the nonstarting position after each complete cycle of the knife.

AMENDATORY SECTION (Amending WSR 04-14-028, filed 6/29/04, effective 1/1/05)

WAC 296-806-48086 Provide mechanisms to stop power-driven guillotine cutters.

((~~Exemption:~~)) EXEMPTION: This requirement does not apply to continuous-feed trimmers.

((~~You must:~~

~~•~~)) You must provide power-driven guillotine cutters with both:

((–)) (1) Brakes or other stopping mechanism; ((~~AND~~

–)) and

(2) An emergency device that will prevent the machine from operating if the brake fails when the starting mechanism is in the nonstarting position.

AMENDATORY SECTION (Amending WSR 04-14-028, filed 6/29/04, effective 1/1/05)

WAC 296-806-48088 Prohibit riders on veneer slicer carriages. ((~~You must:~~

~~•~~)) You must prohibit employees from riding on veneer slicer carriages.

SEWING MACHINES

AMENDATORY SECTION (Amending WSR 04-14-028, filed 6/29/04, effective 1/1/05)

WAC 296-806-485 ((~~Summary.~~)) Sewing machines.

Summary

(1) In addition to the requirements in this section, you need to refer to the following sections of this chapter in order to fully protect your employees from machine hazards:

((~~•~~)) Requirements for all machines, WAC 296-806-200 and 296-806-300.

(2) This section applies to the hazards of needle injuries from domestic or light duty sewing machines.

Your responsibility:

To protect employees from hazards associated with sewing machines.

((~~**You must:**~~
~~Guard sewing machine needles~~
~~WAC 296-806-48502.~~))

You must meet the requirements…	**in this section:**
Guard sewing machine needles	WAC 296-806-48502

AMENDATORY SECTION (Amending WSR 04-14-028, filed 6/29/04, effective 1/1/05)

WAC 296-806-48502 Guard sewing machine needles.

((~~Exemption:~~))
EXEMPTION: This section does not apply to domestic-type sewing machines having a presser-foot that is in the "down" position during operation of the machine.

((~~**You must:**~~
~~•~~)) You must provide a permanently attached guard on each sewing machine that:

((–)) (1) Prevents the operator's fingers from passing under the needle.

((–)) (2) Allows the needle to be conveniently threaded without removing the guard.

Reference: For specific requirements about safeguarding sewing machine belts can be found in, Safeguard belt and rope drives, WAC 296-806-30004.

REPEALER

The following section of the Washington Administrative Code is repealed:

WAC 296-806-500 Definitions.

NEW SECTION

WAC 296-809-099 Definitions. Acceptable entry conditions. The conditions that must exist in a permit-required confined space to allow safe entry and work.

Attendant. An individual stationed outside one or more permit-required confined spaces to monitor the entrants.

Blanking or blinding. The absolute closure of a pipe, line, or duct by fastening a solid plate (such as a spectacle blind or a skillet blind) that completely covers the bore. It is capable of withstanding the maximum pressure of the pipe, line, or duct with no leakage beyond the plate.

Confined space. A space that is **all** of the following:

(a) Large enough and arranged so an employee could fully enter the space and work.

(b) Has limited or restricted entry or exit. Examples of spaces with limited or restricted entry are tanks, vessels, silos, storage bins, hoppers, vaults, excavations, and pits.

(c) Not primarily designed for human occupancy.

Double block and bleed. The closure of a line, duct, or pipe by closing and locking or tagging two in-line valves and by opening and locking or tagging a drain or vent valve in the line between the two closed valves.

Emergency. Any occurrence (including any failure of hazard control or monitoring equipment) or event internal or external to the permit-required confined space that could endanger authorized entrants.

Engulfment. The surrounding capture of a person by a liquid or finely divided (flowable) solid substance that can be inhaled to cause death by filling or plugging the respiratory system or that can exert enough force on the body to cause death by strangulation, constriction, or crushing.

Enter (entry). The action by which a person passes through an opening into a permit-required confined space and includes work activities in that space. Entry is considered to have occurred as soon as any part of the entrant's body breaks the plane of an opening into the space.

Note: If the opening is large enough for the worker to fully enter the space, a permit is required even for partial body entry. Permits are not required for partial body entry where the opening is not large enough for full entry, although other rules such as chapter 296-803 WAC, Lockout-tagout (control of hazardous energy), and chapter 296-841 WAC, Airborne Contaminants, may apply.

Entrant. An employee who is authorized by the employer to enter a permit-required confined space.

Entry permit (permit). The written or printed document that is provided by you to allow and control entry into a permit-required confined space and that contains the information required in WAC 296-809-500, Permit entry procedures.

Entry supervisor. The person (such as the employer, crew leader, or crew chief) responsible for:

(a) Determining if acceptable entry conditions are present at a permit-required confined space where entry is planned;

(b) Authorizing entry and overseeing entry operations; and

(c) Terminating entry as required.

Hazardous atmosphere. An atmosphere that may expose employees to the risk of death, incapacitation, impairment of ability to self-rescue (that is, escape unaided from a permit-required confined space), injury, or acute illness caused by one or more of the following:

(a) Flammable gas, vapor, or mist in excess of ten percent of its lower flammable limit (LFL).

(b) Airborne combustible dust at a concentration that meets or exceeds its LFL.

Note: This concentration may be approximated as a condition in which the dust obscures vision at a distance of five feet (1.52 m) or less.

(c) Atmospheric oxygen concentration below 19.5 percent or above 23.5 percent.

(d) Atmospheric concentration of any substance which may exceed a permissible exposure limit. For additional information about atmospheric concentration, see chapter 296-62 WAC, parts F, G, and I, General occupational health standards and chapter 296-841 WAC, Airborne contaminants.

Note: An airborne concentration of a substance that is not capable of causing death, incapacitation, impairment of ability to self-rescue, injury, or acute illness due to its health effects is not covered by this definition.

(e) Any other atmospheric condition that is immediately dangerous to life or health.

Note: You can find guidance on establishing acceptable atmospheric conditions for air contaminants, which have no WISHA-determined doses or permissible exposure limits using other sources of information, such as:
1. Safety data sheets required by WAC 296-901-14014, Safety data sheets.
2. Published information.
3. Internal documents.

Hot work permit. A written authorization to perform operations, for example, riveting, welding, cutting, burning, and heating, that can provide a source of ignition.

Immediately dangerous to life or health (IDLH). Any of the following conditions:

(a) An immediate or delayed threat to life.

(b) Anything that would cause irreversible adverse health effects.

(c) Anything that would interfere with an individual's ability to escape unaided from a permit-required confined space.

Note: Some materials - hydrogen fluoride gas and cadmium vapor, for example - may produce immediate transient effects that, even if severe, may pass without medical attention, but are followed by sudden, possibly fatal collapse twelve to seventy-two hours after exposure. The victim "feels normal" after recovery from transient effects until collapse. Such materials in hazardous quantities are considered to be "immediately" dangerous to life or health (IDLH).

Inerting. The displacement of the atmosphere in a permit-required confined space by a noncombustible gas (such as nitrogen) to such an extent that the resulting atmosphere is noncombustible.

Note: This procedure produces an IDLH oxygen-deficient atmosphere.

Isolation. The process by which a permit-required confined space is removed from service and completely protected against the release of energy and material into the space by such means as: Blanking or blinding; misaligning or removing sections of lines, pipes, or ducts; a double block and bleed system; lockout or tagout of all sources of energy; or blocking or disconnecting all mechanical linkages.

Line breaking. The intentional opening of a pipe, line, or duct that is or has been carrying flammable, corrosive, or toxic material, an inert gas, or any fluid at a volume, pressure, or temperature capable of causing injury.

Nonpermit confined space. A confined space that does **not** contain actual hazards or potential hazards capable of causing death or serious physical harm.

Oxygen deficient atmosphere. An atmosphere containing less than 19.5 percent oxygen by volume.

Oxygen enriched atmosphere. An atmosphere containing more than 23.5 percent oxygen by volume.

Permit-required confined space or permit space. A confined space that has one or more of the following characteristics capable of causing death or serious physical harm:

(a) Contains or has a potential to contain a hazardous atmosphere;

(b) Contains a material with the potential for engulfing someone who enters;

(c) Has an internal configuration that could allow someone entering to be trapped or asphyxiated by inwardly converging walls or by a floor, which slopes downward and tapers to a smaller cross section;

(d) Contains any physical hazard. This includes any recognized health or safety hazards including engulfment in solid or liquid material, electrical shock, or moving parts;

(e) Contains any other recognized serious safety or health hazard that could either:

(i) Impair the ability to self-rescue; or

(ii) Result in a situation that presents an immediate danger to life or health.

Permit-required confined space program. An overall program for:

(a) Controlling and appropriately protecting employees from permit-required confined space hazards; and

(b) Regulating employee entry into permit-required confined spaces.

Prohibited condition. Any condition in a permit-required confined space that is not allowed by the permit during the authorized entry period.

Rescue service. The personnel designated to rescue employees from permit-required confined spaces.

Retrieval system. The equipment used for nonentry rescue of persons from permit-required confined spaces, such as a retrieval line, full-body harness or wristlets, and a lifting device or anchor.

Testing. The process of identifying and evaluating the hazards that entrants may be exposed to in a permit-required confined space. Testing includes specifying the tests that are to be performed in the permit-required confined space.

Note: Testing allows employers to devise and implement adequate controls to protect entrants during entry, and to determine if acceptable entry conditions are present.

AMENDATORY SECTION (Amending WSR 04-03-081, filed 1/20/04, effective 5/1/04)

WAC 296-809-100 Scope. This chapter applies to all confined spaces and provides requirements to protect employees from the hazards of entering and working in confined spaces. This chapter applies in any of the following circumstances:

((•)) (1) You have confined spaces in your workplace.

((•)) (2) Your employees will enter another employer's confined spaces.

((•)) (3) A contractor will enter your confined spaces.

((•)) (4) You provide confined space rescue services.

You can use Table 1 to help you decide which requirements to follow for confined spaces.

Table 1
Requirements for Confined Spaces

For confined spaces that are	The requirements in the following sections apply					
	200	300	400	500	600	700
Permit-required confined spaces	X	X	X	X	X	X
Entered by a contractor	X	X	X	X	X	X
Nonpermit confined spaces	X					X
Never entered	X					
If you only:						
Use alternate entry procedures	X	X	X		X	
Have a contractor enter your space	X					
Are a rescue service provider		X	X	X		

((~~**Definition:**~~

A ~~**confined space** is a space that is ALL of the following:~~

~~• Large enough and arranged so an employee could fully enter the space and work.~~

~~• Has limited or restricted entry or exit. Examples of spaces with limited or restricted entry are tanks, vessels, silos, storage bins, hoppers, vaults, excavations, and pits.~~

~~• Not primarily designed for human occupancy.~~))

Rules in other chapters that cover confined spaces may also apply to your work. You can find a list of these rules in the resources section of this chapter.

Note: ((•)) 1. Requirements in other chapters may apply to your work. You will find some safety and health requirements are addressed on a broad level in this chapter, while being addressed for a specific application in another rule. When this happens, both requirements apply and should not conflict. When a conflict does occur, you need to follow the more specific requirement.
((•)) 2. If you are uncertain which requirements to follow, contact your local labor and industries (L&I) office.
((•)) 3. For a complete list of local L&I offices, see the resources section of the safety and health core rules, chapter 296-800 WAC.

AMENDATORY SECTION (Amending WSR 04-03-081, filed 1/20/04, effective 5/1/04)

WAC 296-809-200 ((~~Summary.~~)) Identifying and controlling permit-required confined spaces.

((~~Identifying and controlling permit-required confined spaces.~~)) Summary

Your responsibility:

To identify your permit-required confined spaces and control employee entry.

((~~**You must:**~~

~~Identify permit-required confined spaces.~~

~~**WAC 296-809-20002**~~

~~Inform employees and control entry to permit-required confined spaces.~~

~~**WAC 296-809-20004**~~

~~Follow these requirements when you contract with another employer to enter your confined space.~~

~~**WAC 296-809-20006**~~))

You must meet the requirements…	in this section:
Identify permit-required confined spaces	WAC 296-809-20002

You must meet the requirements…	**in this section:**
Inform employees and control entry to permit-required confined spaces	WAC 296-809-20004
Follow these requirements when you contract with another employer to enter your confined space	WAC 296-809-20006

AMENDATORY SECTION (Amending WSR 04-03-081, filed 1/20/04, effective 5/1/04)

WAC 296-809-20002 Identify permit-required confined spaces.

((~~IMPORTANT:~~)) Important:

1. If your workplace contains only nonpermit confined spaces and your employees do not enter another employer's confined space, you may follow only the requirements in:

((–)) a. WAC 296-809-200, Identifying and controlling permit-required confined spaces; and

((–)) b. WAC 296-809-700, Nonpermit confined space requirements.

((~~•~~)) 2. See the resources section for other chapters covering confined spaces that may apply to your work.

((~~**You must:**~~

~~•~~)) (1) You must identify all permit-required confined spaces in your workplace.

((~~•~~)) (2) You must assume any confined space is a permit-required confined space, unless you determine the space to be a nonpermit confined space.

((–)) (a) If you enter the space to determine the hazards, follow the requirements in WAC 296-809-500, Permit entry procedures.

((–)) (b) If you evaluate the confined space and there are no potential or actual hazards, you can consider it to be a nonpermit confined space. ((■)) Document your determination that the space is nonpermit, as required by WAC 296-809-700.

((~~**Definitions:**~~

~~A **permit-required confined space or permit space** is a confined space that has one or more of the following characteristics capable of causing death or serious physical harm:~~

~~– Contains or has a potential to contain a hazardous atmosphere.~~

~~– Contains a material with the potential for engulfing someone who enters the space.~~

~~– Has an internal configuration that could allow someone entering to be trapped or asphyxiated by inwardly converging walls or by a floor, which slopes downward and tapers to a smaller cross-section.~~

~~– Contains any physical hazard. This includes any recognized health or safety hazards including engulfment in solid or liquid material, electrical shock, or moving parts.~~

~~– Contains any other recognized safety or health hazard that could either:~~

~~• Impair the ability to self rescue;~~

~~**OR**~~

~~• Result in a situation that presents an immediate danger to life or health.~~

~~A **nonpermit confined space** is a confined space that does NOT contain actual hazards or potential hazards capable of causing death or serious physical harm.~~))

AMENDATORY SECTION (Amending WSR 04-03-081, filed 1/20/04, effective 5/1/04)

WAC 296-809-20004 Inform employees and control entry to permit-required confined spaces. ((~~**You must:**~~)) (1) You must provide information about confined spaces as follows:

((~~•~~)) (a) Make available to affected employees and their authorized representatives all information and documents required by this chapter.

((~~•~~)) (b) Inform affected employees about the existence, location, and danger of any permit-required confined spaces in your workplace by:

((–)) (i) Posting danger signs; or

((–)) (ii) Using any other equally effective means to inform employees.

Note: A sign reading "Danger-Permit Required Confined Space, DO NOT ENTER" or using pictures or other similar wording employees can understand would satisfy the requirement for a sign.

((~~**You must:**~~))

(2) You must take effective measures to prevent unauthorized employees from entering permit-required confined spaces.

Note: Examples of measures to prevent employee entry include padlocks, bolted covers, special tools to remove covers, and providing employee training.

AMENDATORY SECTION (Amending WSR 04-03-081, filed 1/20/04, effective 5/1/04)

WAC 296-809-20006 Follow these requirements when you contract with another employer to enter your confined space.

((~~IMPORTANT:~~)) **Important:**

The contractor is responsible for following all confined space requirements in this chapter and in other rules that apply. For a list of other rules that may apply, see the resources section of this chapter.

((~~**You must:**~~

~~•~~)) You must do **all** of the following if you arrange to have another employer (contractor) perform work that involves entry into your permit-required confined space:

((–)) (1) Inform the contractor:

((■)) (a) That the workplace contains permit-required confined spaces and entry is allowed only if the applicable requirements of this chapter are met.

((■)) (b) Of the identified hazards and your experience with each permit-required confined space.

((■)) (c) Of any precautions or procedures you require for the protection of employees in or near spaces where the contractor will be working.

((–)) (2) Coordinate entry operations with the contractor, when either employees or employers from the different companies will be working in or near permit-required confined spaces.

((–)) (3) Discuss entry operations with the contractor when they are complete. Include the following in your discussion:

((■)) (a) The program followed during confined space entry; and

((■)) (b) Any hazards confronted or created.

((~~PERMIT-REQUIRED CONFINED SPACE PROGRAM~~))

AMENDATORY SECTION (Amending WSR 04-03-081, filed 1/20/04, effective 5/1/04)

WAC 296-809-300 ((~~Summary.~~)) Permit-required confined space program.

Summary

Your responsibility:

To develop your permit-required confined space program and practices.

((~~IMPORTANT:~~)) Important:

This section applies if employees will enter a permit-required confined space.

((~~**You must:**~~

~~Develop a written permit-required confined space program.~~

~~**WAC 296-809-30002**~~

~~Meet these additional requirements if your employees enter another employer's confined space.~~

~~**WAC 296-809-30004**~~))

You must meet the requirements…	**in this section:**
Develop a written permit-required confined space program	WAC 296-809-30002
Meet these additional requirements if your employees enter another employer's confined space	WAC 296-809-30004

AMENDATORY SECTION (Amending WSR 04-03-081, filed 1/20/04, effective 5/1/04)

WAC 296-809-30002 Develop a written permit-required confined space program.

((~~**IMPORTANT:**~~

~~•~~)) **Important:**

Identify and evaluate the hazards of permit-required confined spaces and the work performed, to assist you in developing your entry program.

((~~**You must:**~~

~~•~~)) (1) You must develop a written program, before employees enter, that describes the means, procedures, and practices you use for the safe entry of permit-required confined spaces as required by this chapter. Include the following when applicable to your confined space entry program:

((~~–~~)) (a) Documentation of permit entry procedures.

((~~–~~)) (b) Documentation used for alternate entry procedures.

((~~–~~)) (c) How to reclassify permit-required confined spaces to nonpermit spaces.

((~~–~~)) (d) Designation of employee roles, such as entrants, attendants, entry supervisors, rescuers, or those who test or monitor the atmosphere in a permit-required space.

((~~–~~)) (e) Identification of designated employee duties.

((~~–~~)) (f) Training employees on their designated roles.

((~~–~~)) (g) How to identify and evaluate hazards.

((~~–~~)) (h) Use and maintenance of equipment.

((~~–~~)) (i) How to prevent unauthorized entry.

((~~–~~)) (j) How to coordinate entry with another employer.

((~~–~~)) (k) How to rescue entrants.

Note: For alternate entry, your written program only needs to meet the requirements of WAC 296-809-400, Employee training, and WAC 296-809-600, Alternate entry procedures, of this chapter.

((~~**You must:**~~

~~•~~)) (2) You must consult with affected employees and their authorized representatives when developing and implementing all aspects of your permit-required confined space program.

((~~•~~)) (3) You must make the written program available to employees and their authorized representatives.

((~~•~~)) (4) You must update your written program as necessary.

Link: You can find a sample permit-required confined space entry program in the user guide located in the resources section of this chapter or by visiting the labor and industries web site at ((~~http://www.lni.wa.gov/wisha/publications/App~~)) http://www.lni.wa.gov/FormPub or http://www.lni.wa.gov/safety/rules/helpfultools/default/asp.

AMENDATORY SECTION (Amending WSR 04-03-081, filed 1/20/04, effective 5/1/04)

WAC 296-809-30004 Meet these additional requirements if your employees enter another employer's confined space. ((~~**You must:**~~

~~•~~)) (1) You must obtain any available information about permit-required confined space hazards and entry operations from the host employer.

((~~•~~)) (2) You must coordinate entry operations with any other employers whose employees will be working in or near the permit-required confined space.

((~~•~~)) (3) You must inform the host employer, either through a debriefing or during entry operations, about:

((~~–~~)) (a) The entry program you will follow; and

((~~–~~)) (b) Any hazards you confronted or created in the space during entry operations.

((~~EMPLOYEE TRAINING~~))

AMENDATORY SECTION (Amending WSR 04-03-081, filed 1/20/04, effective 5/1/04)

WAC 296-809-400 ((~~Summary.~~)) Employee training.

Summary

Your responsibility:

To make sure employees are trained to perform their designated roles safely.

((~~**You must:**~~

~~Provide employee training.~~

~~**WAC 296-809-40002**~~

~~Certify employee proficiency.~~

~~**WAC 296-809-40004**~~))

You must meet the requirements…	**in this section:**
Provide employee training	WAC 296-809-40002
Certify employee proficiency	WAC 296-809-40004

AMENDATORY SECTION (Amending WSR 04-03-081, filed 1/20/04, effective 5/1/04)

WAC 296-809-40002 Provide employee training. ((~~**You must:**~~

~~•~~)) (1) You must provide training to each employee involved in permit-required confined space activities, so they acquire the understanding, knowledge and skills necessary to safely perform assigned duties.

((–)) (a) Establish employee proficiency in their confined space duties.

((–)) (b) Introduce new or revised procedures as necessary.

Note: Employers can determine employee proficiency by:
((–)) 1. Observing employee performance during training exercises that simulate actual confined space conditions.
((–)) 2. A comprehensive written examination; or
((–)) 3. Any other method that is effective for the employer.

((~~**You must:**~~

~~•~~)) (2) You must provide training at the following times:

((–)) (a) Before an employee is first assigned to duties covered by this chapter.

((–)) (b) Before there is a change in an employee's assigned duties.

((–)) (c) When there is a permit-required confined space hazard for which the employee has not already been trained.

((–)) (d) If you have reason to believe that there are either:

((■)) (i) Deviations from your procedures for permit-required confined space entry; or

((■)) (ii) Employee knowledge or use of your procedures is inadequate.

AMENDATORY SECTION (Amending WSR 04-03-081, filed 1/20/04, effective 5/1/04)

WAC 296-809-40004 Certify employee proficiency. ((~~You must:~~ ~~•~~)) (1) You must certify employee proficiency in their assigned duties.

((~~•~~)) (2) You must make sure the certification:

((–)) (a) Contains each employee's name, the trainer's written or electronic signature or initials, and the dates of training.

((–)) (b) Is available for inspection by employees and their authorized representatives.

((~~PERMIT ENTRY PROCEDURES~~))

AMENDATORY SECTION (Amending WSR 04-03-081, filed 1/20/04, effective 5/1/04)

WAC 296-809-500 ((~~Summary.~~)) Permit entry procedures.

Summary

Your responsibility:

To establish procedures for the safe permit-required entry of confined spaces.

((~~Implement procedures for entry permits.~~

~~**WAC 296-809-50002**~~

~~Use an entry permit that contains all required information.~~

~~**WAC 296-809-50004**~~

~~Keep and review your entry permits.~~

~~**WAC 296-809-50006**~~

~~Prevent unauthorized entry.~~

~~**WAC 296-809-50008**~~

~~Provide, maintain, and use proper equipment.~~

~~**WAC 296-809-50010**~~

~~Evaluate and control hazards for safe entry.~~

~~**WAC 296-809-50012**~~

~~Make sure you have adequate rescue and emergency services available.~~

~~**WAC 296-809-50014**~~

~~Use nonentry rescue systems or methods whenever possible.~~

~~**WAC 296-809-50016**~~

~~Make sure entry supervisors perform their responsibilities and duties.~~

~~**WAC 296-800-50018**~~

~~Provide an attendant outside the permit-required confined space.~~

~~**WAC 296-809-50020**~~

~~Make sure entrants know the hazardous conditions and their duties.~~

~~**WAC 296-809-50022**~~

~~Implement procedures for ending entry.~~

~~**WAC 296-809-50024**~~))

You must meet the requirements…	**in this section:**
Implement procedures for entry permits	WAC 296-809-50002
Use an entry permit that contains all required information	WAC 296-809-50004
Keep and review your entry permits	WAC 296-809-50006
Prevent unauthorized entry	WAC 296-809-50008
Provide, maintain and use proper equipment	WAC 296-809-50010
Evaluate and control hazards for safe entry	WAC 296-809-50012
Make sure you have adequate rescue and emergency services available	WAC 296-809-50014
Use nonentry rescue systems or methods whenever possible	WAC 296-809-50016
Make sure entry supervisors perform their responsibilities and duties	WAC 296-809-50018
Provide an attendant outside the permit-required confined space	WAC 296-809-50020
Make sure entrants know the hazardous conditions and their duties	WAC 296-809-50022
Implement procedures for ending entry	WAC 296-809-50024

AMENDATORY SECTION (Amending WSR 04-03-081, filed 1/20/04, effective 5/1/04)

WAC 296-809-50002 Implement procedures for entry permits. ((~~**You must:**~~

~~•~~)) (1) You must identify and evaluate, before employees enter, potential hazards from:

((–)) (a) The permit-required confined space; and

((–)) (b) The work to be performed.

((•)) (2) You must complete an entry permit before entry is authorized, documenting that you have completed the means, procedures and practices necessary for safe entry and work.

((•)) (3) You must make sure that entrants or their representatives have an opportunity to observe any monitoring or testing, or any actions to eliminate or control hazards, performed to complete the permit.

((•)) (4) You must identify the entry supervisor((;

–)) and make sure the entry supervisor signs the entry permit, authorizing entry, before the space is entered.

((•)) (5) You must make the completed permit available to entrants or their authorized representatives at the time of entry. ((–)) Do this by either posting the completed permit at the entry location, or by any other equally effective means.

((•)) (6) You must make sure the duration of the permit does not exceed the time required to complete the assigned task or job identified on the permit.

((•)) (7) You must note any problems encountered during an entry operation on the permit. Use the information to make appropriate revisions to your program, entry operations, means, systems, procedures and practices.

AMENDATORY SECTION (Amending WSR 04-03-081, filed 1/20/04, effective 5/1/04)

WAC 296-809-50004 Use an entry permit that contains all required information. ((~~You must:~~

~~•~~)) You must make sure your entry permit identifies **all** of the following that apply to your entry operation:

((–)) (1) The space to be entered.

((–)) (2) Purpose of the entry.

((–)) (3) Date and the authorized duration of the entry permit.

((–)) (4) Hazards of the space to be entered.

((–)) (5) Acceptable entry conditions.

((–)) (6) Results of initial and periodic tests performed to evaluate and identify the hazards and conditions of the space, accompanied by the names or initials of the testers and by an indication of when the tests were performed.

((–)) (7) Appropriate measures used before entry to isolate the space, and eliminate or control hazards. ((■)) Examples of appropriate measures include the lockout or tagging of equipment and procedures for purging, inerting, ventilating, and flushing permit-required confined spaces.

((–)) (8) Names of entrants and current attendants((;

■)). Other means include the use of rosters or tracking systems as long as the attendant can determine quickly and accurately, for the duration of the permit, which entrants are inside the space.

((–)) (9) The current entry supervisor.

((–)) (10) A space for the signature or initials of the original supervisor authorizing entry.

((–)) (11) Communication procedures for entrants and attendants to maintain contact during the entry.

((–)) (12) Equipment provided for safe entry, such as:

((■)) (a) Personal protective equipment (PPE).

((■)) (b) Testing equipment.
((■)) (c) Communications equipment.
((■)) (d) Alarm systems.
((■)) (e) Rescue equipment.
((–)) (13) Rescue and emergency services available, and how to contact them. Include equipment to use, and names and contact information.
((–)) (14) Other information needed for safety in the particular confined space.
((–)) (15) Additional permits issued for work in the space, such as for hot work.

AMENDATORY SECTION (Amending WSR 04-03-081, filed 1/20/04, effective 5/1/04)

WAC 296-809-50006 Keep and review your entry permits. ((~~You must:~~
~~•~~)) (1) You must keep entry permits for at least one year.
((~~•~~)) (2) You must keep entry permits or other atmospheric monitoring records that show the actual atmosphere an employee entered or worked in, as employee exposure records.
((~~•~~)) (3) You must review your permit-required confined space entry program ((~~as follows:~~
~~Conduct~~)) by conducting a review when you have any reason to believe your entry program may not protect employees, and revise your program before allowing subsequent entries.

Note: Examples of circumstances requiring the review of your program include the following:
((•)) 1. There is unauthorized entry of a permit space.
((•)) 2. A permit space hazard not covered by the permit is found.
((•)) 3. A condition prohibited by the permit occurs.
((•)) 4. An injury or near-miss occurs during entry.
((•)) 5. There is a change in the use or configuration of a permit space.
((•)) 6. An employee complains about the effectiveness of the program.

((~~You must:~~
–)) (4) You must review canceled entry permits within one year following each entry to evaluate:
((■)) (a) Your permit-required confined space program.
((■)) (b) The protection provided to employees entering permit-required confined spaces.
((–)) (5) You must update your written permit-required confined space entry program as necessary.

Note: Employers may perform a single annual review covering all entries performed during a twelve-month period. If no entry is performed during a twelve-month period, no review is necessary.

Reference: Keep employee exposure records according to chapter 296-62 WAC, Part B, Access to records.

AMENDATORY SECTION (Amending WSR 04-03-081, filed 1/20/04, effective 5/1/04)

WAC 296-809-50008 Prevent unauthorized entry. ((~~You must:~~
~~•~~)) You must implement measures necessary to prevent unauthorized entry into permit-required confined spaces, when conducting authorized entry.

Note: ((•)) 1. When removing entrance covers to open the confined space, protect entrants and those outside the confined space from hazards.

((•)) 2. Examples of measures to prevent unauthorized entry are signs, barricades, warning tape, and an attendant.

AMENDATORY SECTION (Amending WSR 04-03-081, filed 1/20/04, effective 5/1/04)

WAC 296-809-50010 Provide, maintain, and use proper equipment. ((~~You must:~~

~~•~~)) (1) You must provide the equipment in Table 2, when needed and at no cost to employees.

((~~•~~)) (2) You must make sure that employees use provided equipment properly.

((~~•~~)) (3) You must maintain the provided equipment.

Table 2
Equipment Provided to Employees at No Cost

Type of equipment	For
Testing and monitoring equipment	Evaluating permit-required confined space conditions
Ventilating equipment	Obtaining and maintaining acceptable entry conditions
Communication equipment	Effective communication between the attendant and the entrants and to initiate rescue when required
Personal protective equipment (PPE)	Protecting employees from hazards of the space or the work performed
Lighting equipment	Employees to see well enough to work safely and to exit the space quickly in an emergency
Barriers or shields, such as pedestrian, vehicle or other barriers	Protecting employees from hazards outside of the space
Ladders	Safe entry and exit by entrants
Rescue and emergency equipment, except for equipment provided by the rescue service provider	Safe and effective rescue
Any other equipment	Safe entry into and rescue from permit-required confined spaces

AMENDATORY SECTION (Amending WSR 04-03-081, filed 1/20/04, effective 5/1/04)

WAC 296-809-50012 Evaluate and control hazards for safe entry. ((~~•~~)) (1) You must evaluate and control hazards for safe entry into permit-required confined spaces by doing all the following:

((~~–~~)) (a) Test for atmospheric hazards, in this order:

((~~■~~)) (i) Oxygen.

((■)) (ii) Combustible gases and vapors.

((■)) (iii) Toxic gases and vapors.

((–)) (b) Provide each entrant or their authorized representative an opportunity to observe any of the following:

((■)) (i) Preentry testing.

((■)) (ii) Subsequent testing.

((■)) (iii) Monitoring of permit-required spaces.

((–)) (c) Reevaluate the permit-required space in the presence of any entrant, or their authorized representative, who requests this to be done because they have reason to believe that the evaluation of that space may not have been adequate.

((–)) (d) Upon request, immediately provide each entrant or their authorized representative, with the results of any testing required by this rule.

((–)) (e) Continuously monitor conditions in areas where entrants are working, when isolation of the space is not feasible.

((•)) (2) Examples would be a large space or space that is part of a continuous system, such as a sewer.

((•)) (3) You must evaluate space conditions during entry as follows:

Table 3
Evaluating Space Conditions

You must:	In order to
Test conditions before entry	Determine that acceptable entry conditions exist before entry is authorized by the entry supervisor
Test or evaluate space conditions during entry	Determine that acceptable entry conditions are being maintained during entry operations
Evaluate entry operations	Make sure entrants of more than ((~~one~~)) 1 employer working at the same time in or around a permit-required confined space, do not endanger each other

((~~IMPORTANT:~~)) Important:

This section applies to both:

((–)) 1. Employers whose employees use permit entry procedures; and

((–)) 2. Employers who provide rescue services.

AMENDATORY SECTION (Amending WSR 09-05-071, filed 2/17/09, effective 4/1/09)

WAC 296-809-50014 Make sure you have adequate rescue and emergency services available. ((~~You must:~~)) (1) You must make sure you have adequate rescue and emergency services available during your permit-required confined space entry operations.

((•)) (a) Evaluate and select rescue teams or services who can:

((–)) (i) Respond to a rescue call in a timely manner. Timeliness is based on the identified hazards. Rescuers must have the capability to reach potential victims within an appropriate time frame based on the identified permit space hazards.

((–)) (ii) Proficiently rescue employees from a permit-required confined space in your workplace. Rescuers must have the appropriate equipment for the type of rescue.

((•)) (b) Make sure that at least one member of the rescue team or service holds a current certification in first aid and cardiopulmonary resuscitation (CPR).

((•)) (c) Inform each rescue team or service about the hazards they may confront when called to perform rescue.

((•)) (d) Provide the rescue team or service with access to all permit spaces from which rescue may be necessary. ((–)) This will allow them to develop appropriate rescue plans and to practice rescue operations.

Note: What will be considered timely will vary according to the specific hazards involved in each entry. For example, chapter 296-842 WAC, Respirators, requires that employers provide a standby person or persons capable of immediate action to rescue employee(s) for work areas considered to contain an IDLH atmosphere.

(2) You must provide employees assigned to provide permit-required confined space rescue and emergency services ((~~must be provided~~)), at no cost to the employee, with:

((•)) (a) Personal protective equipment (PPE) needed for safe entry.

((•)) (b) Other equipment required to conduct rescues safely.

((•)) (c) Training so they are:

((–)) (i) Proficient in the use of the PPE and other equipment.

((–)) (ii) Proficient as an entrant of permit-required confined spaces.

((–)) (iii) Able to safely perform assigned rescue and emergency duties.

((–)) (iv) Knowledgeable in basic first aid and cardiopulmonary resuscitation (CPR).

((•)) (d) Practice sessions for permit-required confined space rescues **at least** once every twelve months where dummies, manikins, or actual persons are removed from either:

((–)) (i) The actual permit spaces; or

((–)) (ii) Representative permit spaces that simulate the opening size, configuration, and accessibility, of permit spaces where rescue will be performed.

(3) You must establish procedures for:

((•)) (a) Contacting rescue and emergency services.

((•)) (b) Rescuing entrants from permit-required confined spaces.

((•)) (c) Providing necessary emergency services to rescued entrants.

((•)) (d) Preventing unauthorized persons from attempting a rescue.

AMENDATORY SECTION (Amending WSR 04-03-081, filed 1/20/04, effective 5/1/04)

WAC 296-809-50016 Use nonentry rescue systems or methods whenever possible. ((~~You must:~~

~~•~~)) (1) You must use nonentry retrieval systems or methods to rescue entrants in a permit-required confined space unless this:

((–)) (a) Would increase the overall risk of injury to entrants; or

((–)) (b) Would not contribute to the rescue of the entrant.

((•)) (2) You must make sure each entrant uses a chest or full-body harness, with a retrieval line attached to the harness at one of the following locations:

((–)) (a) At the center of the employee's back, near shoulder level.

((–)) (b) Above the employee's head.

((–)) (c) At another point which presents a profile small enough for the successful removal of the employee.

((•)) (3) You must attach the retrieval line to a mechanical device or fixed point outside the space, so rescue can begin as soon as necessary.

((•)) (4) You must make sure a mechanical device is available to retrieve entrants from vertical spaces more than five feet (1.52 m) deep.

Note: When you can demonstrate that the use of a chest or full-body harness is not feasible or creates a greater hazard, then you may use wristlets or another method shown to be the safest and most effective alternative.

AMENDATORY SECTION (Amending WSR 04-03-081, filed 1/20/04, effective 5/1/04)

WAC 296-809-50018 Make sure entry supervisors perform their responsibilities and duties. ((~~You must:~~

~~•~~)) You must make sure that an entry supervisor:

((–)) (1) Authorizes the entry into a permit-required confined space by signing the entry permit.

((–)) (2) Oversees entry operations.

((–)) (3) Knows about the hazards that may be faced during entry, including the mode, signs or symptoms, and consequences of the exposure.

((–)) (4) Verifies and checks **all** of the following:

((■)) (a) The appropriate entries have been made on the permit.

((■)) (b) All tests specified by the permit have been conducted.

((■)) (c) All procedures and equipment specified by the permit are in place before approving the permit and allowing entry to the space.

((–)) (5) Terminates the entry and cancels the permit when:

((■)) (a) The assigned task or job has been completed.

((■)) (b) A condition in the space that is not covered by the entry permit is discovered.

((–)) (6) Verifies that rescue services are available and that there is a way to contact them.

((–)) (7) Removes unauthorized individuals who enter or attempt to enter the permit-required confined space during entry operations.

((–)) (8) Determines that entry operations remain consistent with the terms of the entry permit and acceptable entry conditions are maintained:

((■)) (a) Whenever responsibility for a permit-required space entry operation is transferred; and

((■)) (b) At regular intervals dictated by the hazards and operations performed within the space.

Note: ((•)) 1. Make sure entry supervisors have the required knowledge and proficiency to perform the job duties and responsibilities required by this chapter.
((•)) 2. The entry supervisor may also perform other duties under this chapter, such as attendant or entrant, if they are trained and proficient in those duties.
((•)) 3. The responsibility of the entry supervisor may be passed from one supervisor to another during an entry operation.

AMENDATORY SECTION (Amending WSR 04-03-081, filed 1/20/04, effective 5/1/04)

WAC 296-809-50020 Provide an attendant outside the permit-required confined space.

((~~**IMPORTANT:**~~

~~•~~)) **Important:**

1. The number of attendants assigned should be tailored to the requirements of the space and the work performed.

((~~•~~)) 2. You need to assess if it is appropriate or possible to have multiple permit spaces monitored by a single attendant, or have an attendant stationed at a location outside each space. Video cameras and radios are examples of tools that may assist an attendant monitoring more than one space.

((~~•~~)) 3. Attendants may be stationed at any location outside the permit-required confined space if the duties described in this section can be effectively performed for each space that is monitored.

((~~**You must:**~~

~~•~~)) (1) You must provide at least one attendant outside the permit-required confined space during entry operations.

((~~•~~)) (2) You must make sure each permit-required confined space attendant:

((–)) (a) Understands the hazards that may be faced during entry, including the mode, signs or symptoms, and results of exposure to the hazards.

((–)) (b) Is aware of the behavioral effects of exposure to the hazard.

((–)) (c) Continuously maintains an accurate count of entrants in the space.

((–)) (d) Maintains an accurate record of who is in the permit-required confined space.

((–)) (e) Communicates with entrants as necessary to monitor their status or alert them of the need to evacuate the space.

((–)) (f) Monitors activities inside and outside the space to determine if it is safe for entrants to remain in the space.

((–)) (g) Orders entrants to evacuate the space immediately if **any** of the following conditions occur:

((■)) (i) A prohibited condition.

((■)) (ii) The behavioral effects of hazardous exposure in an entrant.

((■)) (iii) A situation outside the space that could endanger entrants.

((■)) (iv) The attendant cannot effectively and safely perform all the duties required in this chapter.

((–)) (h) Takes the following actions when unauthorized persons approach or enter a space:

((■)) (i) Warn unauthorized persons to stay away from the space.

((■)) (ii) Tells the unauthorized persons to exit immediately if they have entered the space.

((■)) (iii) Informs entrants and the entry supervisor if unauthorized persons have entered the space.

((–)) (i) Performs nonentry rescues as specified by your rescue procedure.

((–)) (j) Has the means to respond to an emergency affecting one or more of the permit spaces being monitored without preventing per-

formance of the attendant's duties to the other spaces being monitored.

((–)) (k) Carries out no duties that might interfere with their primary duty to monitor and protect the entrants.

((–)) (l) Calls for rescue and other emergency services as soon as entrants may need assistance to escape from the space.

((–)) (m) Monitors entry operations until relieved by another attendant or all entrants are out of the space.

AMENDATORY SECTION (Amending WSR 04-03-081, filed 1/20/04, effective 5/1/04)

WAC 296-809-50022 Make sure entrants know the hazardous conditions and their duties. ((~~You must:~~

~~•~~)) You must make sure that all entrants:

((–)) (1) Know the hazards they may face during entry, including the mode, signs or symptoms, and results of exposure to the hazards.

((–)) (2) Use equipment properly.

((–)) (3) Communicate with the attendant as necessary so the attendant can:

((■)) (a) Monitor entrant status.

((■)) (b) Alert entrants of the need to evacuate.

((–)) (4) Alert the attendant whenever either of these situations exist:

((■)) (a) A warning sign or symptom of exposure to a dangerous situation such as, behavioral changes, euphoria, giddiness potentially from lack of oxygen or exposure to solvents.

((■)) (b) A prohibited condition.

((–)) (5) Exit from the permit-required confined space as quickly as possible when one of the following occurs:

((■)) (a) The attendant or entry supervisor gives an order to evacuate.

((■)) (b) The entrant recognizes any warning sign or symptom of exposure to a dangerous situation.

((■)) (c) The entrant detects a prohibited condition.

((■)) (d) An evacuation alarm is activated.

AMENDATORY SECTION (Amending WSR 04-03-081, filed 1/20/04, effective 5/1/04)

WAC 296-809-50024 Implement procedures for ending entry. ((~~You must:~~

~~•~~)) You must make sure you terminate the entry when entry operations are completed, including securing an entrance cover and canceling the permit.

AMENDATORY SECTION (Amending WSR 04-03-081, filed 1/20/04, effective 5/1/04)

WAC 296-809-600 Alternate entry procedures.

Summary((~~:~~))

Your responsibility:

To choose alternate entry procedures for spaces where the only hazard is a hazardous atmosphere.

((~~IMPORTANT:~~)) Important:

In addition to this section, you also need to meet the requirements in the following sections of this chapter:

((–)) 1. WAC 296-809-200, Identifying and controlling permit-required confined spaces.

((–)) 2. WAC 296-809-300, Permit-required confined space program.

((–)) 3. WAC 296-809-400, Employee training.

((~~**You must:**~~

~~Make sure the following conditions are met if using alternate entry procedures.~~

~~**WAC 296-809-60002**~~

~~Follow these alternate entry procedures for permit-required confined spaces.~~

~~**WAC 296-809-60004**~~))

You must meet the requirements…	**in this section:**
Make sure the following conditions are met if using alternate entry procedures	WAC 296-809-60002
Follow these alternate entry procedures for permit-required confined spaces	WAC 296-809-60004

AMENDATORY SECTION (Amending WSR 04-03-081, filed 1/20/04, effective 5/1/04)

WAC 296-809-60002 Make sure the following conditions are met if using alternate entry procedures. ((~~**You must:**~~

~~•~~)) (1) You must make sure, when using alternate entry procedures, instead of permit entry procedures, that you have monitoring and inspection data that supports the following:

((■)) (a) That the only hazard of the permit-required confined space is an actual or potentially hazardous atmosphere.

((■)) (b) That continuous forced air ventilation alone is all that is needed to maintain the permit-required confined space for safe entry.

((~~•~~)) (2) You must make sure an entry to obtain monitoring and inspection data or to eliminate hazards is performed according to WAC 296-809-500, Permit entry procedures.

((~~•~~)) (3) You must make sure all documentation produced is available to each affected employee and their authorized representative.

AMENDATORY SECTION (Amending WSR 04-03-081, filed 1/20/04, effective 5/1/04)

WAC 296-809-60004 Follow these alternate entry procedures for permit-required confined spaces. ((~~You must:~~

~~•~~)) You must use the following alternate entry procedures:

((–)) (1) Eliminate any unsafe conditions before removing an entrance cover.

((■)) (a) When entrance covers are removed, promptly guard the opening with a railing, temporary cover, or other temporary barrier to prevent accidental falls through the opening and protect entrants from objects falling into the space.

((■)) (b) Certify that preentry measures have been taken (such as safe removal of the cover and having protection needed to gather preentry data), with the date, location of the space, and signature of the person certifying.

((■)) (c) Make the preentry certification available before entry to each entrant.

((–)) (2) Before an employee enters the confined space, test the internal atmosphere with a calibrated, direct-reading instrument for all of the following, in this order:

((■)) (a) Oxygen content.

((■)) (b) Flammable gases and vapors.

((■)) (c) Potential toxic air contaminants.

((–)) (3) Provide entrants, or their authorized representatives, with an opportunity to observe the preentry and periodic testing.

((–)) (4) Make sure the atmosphere within the space is not hazardous when entrants are present.

((–)) (5) Use continuous forced air ventilation, as follows:

((■)) (a) Wait until the forced air ventilation has removed any hazardous atmosphere before allowing entrants into the space.

((■)) (b) Direct forced air ventilation toward the immediate areas where employees are, or will be, and continue ventilation until all employees have left the space.

((■)) (c) Provide the air supply from a clean source and make sure it does not increase hazards in the space.

((–)) (6) Test the atmosphere within the space as needed to make sure hazards do not accumulate.

((–)) (7) If a hazardous atmosphere is detected during entry, do all of the following:

((■)) (a) Evacuate employees from the space immediately.

((■)) (b) Evaluate the space to determine how the hazardous atmosphere developed.

((■)) (c) Implement measures to protect employees from the hazardous atmosphere before continuing the entry operation.

((■)) (d) Verify the space is safe for entry before continuing the entry operation.

AMENDATORY SECTION (Amending WSR 04-03-081, filed 1/20/04, effective 5/1/04)

WAC 296-809-700 Nonpermit confined spaces requirements. Summary((÷))

Your responsibility:

To make sure any space you classify as nonpermit, does not have the potential to contain serious health or safety hazards.

((~~**You must:**~~

~~Follow these requirements when classifying a confined space as a nonpermit confined space.~~

~~**WAC 296-809-70002**~~

~~Reevaluate nonpermit confined spaces if hazards develop.~~

~~**WAC 296-809-70004**~~))

You must meet the requirements…	**in this section:**
Follow these requirements when classifying a confined space as a nonpermit confined space	WAC 296-809-70002
Reevaluate nonpermit confined spaces if hazards develop	WAC 296-809-70004

((~~IMPORTANT:~~)) Important:

A confined space may be classified as a nonpermit confined space for as long as the hazards remain eliminated. Once a hazard is present, you must follow all requirements of this chapter that apply.

AMENDATORY SECTION (Amending WSR 07-03-163, filed 1/24/07, effective 4/1/07)

WAC 296-809-70002 Follow these requirements when classifying a confined space as a nonpermit confined space. ((~~**You must:**~~

~~•~~)) (1) You must make sure the confined space meets these conditions to be classified as nonpermit confined spaces:

((~~–~~)) (a) The confined space does not contain an actual or potential hazardous atmosphere.

((~~–~~)) (b) The confined space does not contain hazards capable of causing death or serious physical harm. This includes any recognized health or safety hazards including engulfment in solid or liquid material, electrical shock, or moving parts.

((~~–~~)) (c) If you must enter to remove hazards, the space must be treated as a permit-required confined space until hazards have been eliminated.

Note: ((~~•~~)) 1. Controlling atmospheric hazards through forced air ventilation does not eliminate the hazards.
((~~•~~)) 2. You should evaluate the use of lockout-tagout, as covered in chapter 296-803 WAC, to determine if using it fully eliminates the hazard.
((~~•~~)) 3. You are allowed to use alternate entry procedures covered in WAC 296-809-600, if you can demonstrate that forced air ventilation alone will control all hazards in the space.

((~~**You must:**~~

~~•~~)) (2) You must document how you determined the confined space contained no permit-required confined space hazards. Certify this documentation with the following:

((~~–~~)) (a) Date.

((~~–~~)) (b) Location of the space.

((~~–~~)) (c) Signature of the person making the determination.

((~~•~~)) (3) You must make the certification available to each entrant, or their authorized representative.

Note: This certification must be completed every time a permit-required confined space is reclassified as a nonpermit space.

AMENDATORY SECTION (Amending WSR 04-03-081, filed 1/20/04, effective 5/1/04)

WAC 296-809-70004 Reevaluate nonpermit confined spaces if hazards develop. ((~~You must:~~

~~•~~)) (1) You must reclassify a nonpermit confined space to a permit-required confined space, if necessary, when changes in the use or configuration of the space increase the hazards to entrants.

((~~•~~)) (2) You must make sure all employees exit the space if hazards develop. You must then reevaluate the space and determine whether it must be reclassified as a permit-required confined space.

REPEALER

The following section of the Washington Administrative Code is repealed:

WAC 296-809-800 Definitions.

NEW SECTION

WAC 296-828-099 Definitions. Action level. An airborne concentration of a hazardous substance that is calculated as an 8-hour time-weighted average, and initiates certain requirements to be followed such as exposure monitoring or medical surveillance.

Carcinogens. See **"Select carcinogen."**

Chemical hygiene officer. An employee designated by the employer who is qualified by training or experience to provide technical guidance in the development and implementation of the chemical hygiene plan. This definition is not intended to place limitations on the designated employee's position description or job classification within the employer's organization.

Chemical hygiene plan. A written program developed and implemented by the employer that establishes procedures, equipment, personal protective equipment, and work practices to protect employees from the health hazards of the chemicals used in the laboratory.

Container. Any container, except for pipes or piping systems that contains a hazardous substance. For example, it can be any of the following:

(a) Barrel.
(b) Bottle.
(c) Can.
(d) Cylinder.
(e) Drum.
(f) Reaction vessel.
(g) Storage tank.

Day. Any part of a calendar day.

Designated representative. Any one of the following:

(a) Any individual or organization to which an employee gives written authorization.

(b) A recognized or certified collective bargaining agent without regard to written employee authorization.

(c) The legal representative of a deceased or legally incapacitated employee.

Emergency. Any event that could or does result in the unexpected, significant release of a hazardous substance. Examples of emergencies include equipment failure, container rupture, or control equipment failure.

Exposure. The contact an employee has with a hazardous substance, whether or not protection is provided by respirators or other personal protective equipment (PPE). Exposure can occur through various routes of entry such as inhalation, ingestion, skin contact, or skin absorption.

Hazardous chemical. Any chemical which is classified as health hazard or simple asphyxiate in accordance with the Hazard Communication Standard, WAC 296-901-140.

Health hazard. A chemical that is classified as posing one of the following hazardous effects: Explosive; flammable (gases, aerosols, liquids, or solids); oxidizer (liquid, solid, or gas); self-reactive; pyrophoric (gas, liquid, or solid); self-heating; organic peroxide; corrosive to metal; gas under pressure; in contact with water emits flammable gas; or combustible dust. The criteria for determining whether a chemical is classified as a physical hazard are in Appendix B of the Hazard Communication Standard, WAC 296-901-14024 and

296-901-14006 (definitions of "combustible dust" and "pyrophoric gas").

Laboratory. A facility where the "laboratory use of hazardous substances" takes place. A workplace where relatively small amounts of hazardous substances are used on a nonproduction basis.

Laboratory-type hood. A device located in a laboratory, enclosure on five sides with a moveable sash or fixed partially enclosed on the remaining side; constructed and maintained to draw air from the laboratory and to prevent or minimize the escape of air contaminants into the laboratory; and allows chemical manipulations to be conducted in the enclosure without insertion of any portion of the employee's body other than hands and arms.

Note: Walk-in hoods with adjustable sashes meet the above definition provided that the sashes are adjusted during use so that the airflow and the exhaust of air contaminants are not compromised and employees do not work inside the enclosure during the release of airborne hazardous substances.

Laboratory scale. Work with substances in which the containers used for reactions, transfers, and other handling of the substances are designed to be easily and safely manipulated by one person. "Laboratory scale" **does not** include workplaces producing commercial quantities of materials.

Laboratory use. The handling or use of hazardous substances that includes **all** the following:

(a) Chemical manipulations conducted on a "laboratory scale";

(b) Multiple chemical procedures or chemicals are used;

(c) The procedures are not part of a production process, nor in any way simulate a production process; and

(d) "Protective laboratory practices and equipment" are available and are commonly used to minimize the potential for employee exposures to hazardous substances.

Licensed health care professional (LHCP). An individual whose legally permitted scope of practice allows him or her to provide some or all of the health care services required for medical evaluations.

Mutagen. Chemicals that cause permanent changes in the amount or structure of the genetic material in a cell. Chemicals classified as mutagens in accordance with the Hazard Communication Standard, WAC 296-901-140 must be considered mutagens for purposes of this section.

Permissible exposure limits (PELs). PELs are employee exposures to toxic substances or harmful physical agents that must not be exceeded. PELs are also specified in WISHA rules found in other chapters.

Physical hazard. A chemical that is classified as posing one of the following hazardous effects: Explosive; flammable (gases, aerosols, liquids, or solids); oxidizer (liquid, solid, or gas); self-reactive; pyrophoric (gas, liquid, or solid); self-heating; organic peroxide; corrosive to metal; gas under pressure; in contact with water emits flammable gas; or combustible dust. The criteria for determining whether a chemical is classified as a physical hazard are in Appendix B of the Hazard Communication Standard, WAC 296-901-14024 and 296-901-14006 (definitions of "combustible dust" and "pyrophoric gas").

Protective laboratory practices and equipment. Laboratory procedures, practices, and equipment accepted by laboratory health and safety experts as effective, that can be shown to be effective, in minimizing the potential for employee exposure to hazardous substances.

Reproductive toxin. Chemicals that affect the reproductive capabilities including adverse effects on sexual function and fertility in adult males and females, as well as adverse effects on the development

of the offspring. Chemicals classified as reproductive toxins in accordance with the Hazard Communication Standard, WAC 296-901-140 shall be considered reproductive toxins for purposes of this section.

Safety data sheet (SDS). Written, printed, or electronic information (on paper, microfiche, or on-screen) that informs manufacturers, distributors, employers or employees about a hazardous substance, its hazards, and protective measures as required by safety data sheet and label preparation, WAC 296-901-14012 and 296-901-14014.

Select carcinogen. Any substance meeting one of the following criteria:

(a) Regulated by WISHA as a carcinogen.

(b) Listed in the "known to be carcinogens" category in the latest edition of the *Annual Report on Carcinogens* by the National Toxicity Program (NTP).

(c) Listed in Group I (carcinogenic to humans) in the latest editions of the International Agency for Research on Cancer (IARC) Monographs.

(d) Listed in either group 2A or 2B by IARC **or** in the category "reasonably anticipated to be carcinogens" by the NTP, and causes statistically significant tumor incidence in experimental animals in accordance with any of the following criteria:

(i) After an inhalation exposure of six to seven hours a day; five days a week; for a significant portion of a lifetime to dosages of less than 10 mg/m^3; **or**

(ii) After repeated skin application of less than 300 mg/kg of body weight per week; **or**

(iii) After oral dosages of less than 50 mg/kg of body weight per day.

Time-weighted average (TWA_8). An exposure limit averaged over an 8-hour period that must not be exceeded during an employee's workday.

AMENDATORY SECTION (Amending WSR 14-07-086, filed 3/18/14, effective 5/1/14)

WAC 296-828-100 Scope. This chapter applies to the laboratory use of hazardous chemicals. To determine if this chapter applies to your workplace, use Table 1.

Table 1
Chapter Application

Are "Hazardous Chemicals" used? **Definition:** *Hazardous chemicals* are any chemicals that have been shown (in at least one scientific study) to cause acute or chronic health effects in exposed employees. 296-901 WAC contains information that can be used to determine if a chemical is considered hazardous for this rule	YES	NO
Are the hazardous chemicals used in "laboratory scale operations"? **Note:** Laboratory scale operations use containers that have been designed to be easily and safely handled by one person for reactions, transfers and other handling of the hazardous chemicals. Laboratory scale operations **are not** Capable of producing commercial quantities of materials Part of a production process or simulate a production process Part of a quality control process that directs how a process operates. A simulation of a production process such as a pilot plant	YES	NO *If any one of your answers brought you here, the Laboratory Standard **does not apply**, but other WISHA rules still apply*
Are multiple chemicals or multiple procedures used?	YES	NO
Are protective practices or protective equipment generally available for employee protection? **Note:** Protective practices and equipment are those procedures, practices, or equipment accepted by laboratory health and safety experts as effective at controlling employee exposures to hazardous chemicals. For example laboratory fume hoods, chemical splash goggles, protective gloves, etc. OR Those practices, procedures or equipment the employer can show are effective at controlling employee exposures to hazardous chemicals.	YES	NO
If your answers brought you here, the Laboratory Standard **applies** to your workplace.		

((~~IMPORTANT:~~
~~•~~)) **Important:**

1. When your laboratory operation is covered by this chapter, and you use any of the substances in Table 2, the following applies with the exception of formaldehyde use in histology, pathology, and anatomy laboratories. In histology, pathology, and anatomy laboratories you must follow the requirements in chapter 296-856 WAC, Formaldehyde. This chapter applies to all other formaldehyde laboratory uses as defined in Table 1:

((–)) a. The exposure limits and any requirement protecting employees from skin and eye contact in the rules listed in Table 2 will still apply.

((–)) b. Where the action level (or where no action level exists, the permissible exposure limit) is exceeded for a substance listed in

Table 2, the exposure evaluation and medical surveillance requirements in the substance rule will still apply.

((–)) c. You are not required to meet other requirements of the substance rule.

((•)) 2. To get the permissible exposure limits (PELs) for hazardous chemicals used in your laboratory, see chapter 296-841 WAC, Airborne contaminants.

Table 2
WISHA Regulated Hazardous Chemicals

Acrylonitrile
Arsenic (inorganic)
Asbestos
Benzene
Butadiene
Cadmium
Coke ovens
Cotton dust
1, 2-Dibromo-3-chloropropane
Ethylene oxide
Formaldehyde
Lead
Methylene chloride
Methylenedianiline
Vinyl chloride
Ionizing radiation
4-Nitrobiphenyl
Alpha-Naphthylamine
4,4' Methylene bis (2 - chloroaniline)
Methyl chloromethyl ether
3,3'-Dichlorobenzidine (and its salts)
Acrylonitrile
Bis-Chloromethyl ether
Beta-Naphthylamine benzidine
4-Aminodiphenyl
Ethyleneimine
Beta-Propiolactone
2-Acetylaminofluorene
4-Dimethylaminoazobenzene
N-Nitrosodimethylamine

AMENDATORY SECTION (Amending WSR 14-07-086, filed 3/18/14, effective 5/1/14)

WAC 296-828-200 Using hazardous chemicals in laboratories.
Summary
Your responsibility:
To protect employees from laboratory use of hazardous chemicals.
((~~WAC 296-828-20005~~

~~Chemical hygiene plan.~~
~~WAC 296-828-20010~~
~~Exposure evaluation.~~
~~WAC 296-828-20015~~
~~Training.~~
~~WAC 296-828-20020~~
~~Labeling and safety data sheets (SDSs).~~
~~WAC 296-828-20025~~
~~Chemicals produced in laboratories.~~
~~WAC 296-828-20030~~
~~Medical evaluations.~~))

You must meet the requirements…	**in this section:**
Chemical hygiene plan	WAC 296-828-20005
Exposure evaluation	WAC 296-828-20010
Training	WAC 296-828-20015
Labeling and safety data sheets (SDSs)	WAC 296-828-20020
Chemicals produced in laboratories	WAC 296-828-20025
Medical evaluations	WAC 296-828-20030

AMENDATORY SECTION (Amending WSR 07-05-062, filed 2/20/07, effective 4/1/07)

WAC 296-828-20005 Chemical hygiene plan. ((~~You must:~~

~~•~~)) (1) You must develop and carry out a written chemical hygiene plan (CHP) that will protect your employees from hazardous substances in the laboratory and keep exposure levels below those listed in chapter 296-841 WAC, Airborne contaminants.

((~~•~~)) (2) You must make sure the written plan is readily available to employees and their representatives.

((~~•~~)) (3) You must include the following elements in your written CHP:

((~~–~~)) (a) The names or job titles of the chemical hygiene officer, other personnel responsible for implementing the CHP, or when appropriate, the members of a chemical hygiene committee.

((~~–~~)) (b) Standard operating procedures that provide employee protection when working with hazardous substances.

((~~–~~)) (c) Criteria for how you will select and use control measures to reduce employee exposures to hazardous chemicals, especially chemicals known to be extremely hazardous.

((~~–~~)) (d) Additional employee protection for select carcinogens, reproductive toxins, and chemicals with high degree of acute toxicity. The following will be considered, when appropriate:

((~~■~~)) (i) The establishment of exposure control areas.

((~~■~~)) (ii) Containment devices, such as fume hoods or glove boxes.

((~~■~~)) (iii) The safe removal of contaminated waste.

((~~■~~)) (iv) Procedures for decontamination.

((–)) (e) Specific measures to make sure fume hoods and other protective equipment provide proper and adequate performance and are properly functioning.

((–)) (f) The circumstances when specific laboratory operation, activity, or procedure requires prior approval from the employer or their designated representative before implementation.

((–)) (g) A description of how you are going to train and inform your employees about laboratory use of hazardous chemicals.

((–)) (h) A description of your provisions for medical consultations and medical examinations.

((•)) (4) You must review and evaluate the effectiveness of your written CHP at least annually and update as necessary.

Reference: This publication can provide you with additional information to help you with your written chemical hygiene plan: National Research Council, Prudent Practices for Disposal of Chemicals from Laboratories, National Academy Press, Washington, D.C., 1995.

AMENDATORY SECTION (Amending WSR 07-03-163, filed 1/24/07, effective 4/1/07)

WAC 296-828-20010 Exposure evaluation.

((~~IMPORTANT:~~)) **Important:**

For any of the specific substances listed in Table 2 of the scope of this chapter, you need to follow the exposure evaluation procedures found in the chapters regulating those substances if employee exposure routinely exceeds the AL or PEL. For all other employee exposures follow this section to determine exposure evaluation procedures.

((~~You must:~~

~~•~~)) (1) You must determine if you could have a respiratory hazard as described in chapter 296-841 WAC, Respiratory hazards.

Reference: For additional requirements relating to respiratory hazards, see:
((–)) 1. Chapter 296-841 WAC, Respiratory hazards.
((–)) 2. Chapter 296-842 WAC, Respirators.
((–)) 3. The specific rule for your chemical.

((~~You must:~~

~~•~~)) (2) You must provide written notification of exposure monitoring results to employees represented by your exposure evaluation, within five business days after the results become known to you.

Note: ((•)) 1. You can notify employees either individually or by posting the notification in areas readily accessible to all affected employees.
((•)) 2. Posted notifications may need information that allows affected employees to determine which monitoring results apply to them.
((•)) 3. Notification may be:
((–)) a. In any written form, such as hand-written or e-mail.
((–)) b. Limited to the required information, such as exposure monitoring results.

Reference: ((•)) For additional requirements relating to employee exposure records, go to chapter 296-802 WAC, Employee medical and exposure records.

AMENDATORY SECTION (Amending WSR 14-07-086, filed 3/18/14, effective 5/1/14)

WAC 296-828-20015 Training. ((~~You must:~~

~~•~~)) (1) You must inform employees about the presence of hazardous chemicals at the following times:

((–)) (a) At the time of initial assignment to a work area where hazardous chemicals are present.

((–)) (b) Prior to situations involving a new exposure to hazardous chemicals.

((•)) (2) You must train employees on all of the following:

((–)) (a) Methods and observations for detecting the presence or release of hazardous substances. Examples of these methods and observations may include:

((■)) (i) Monitoring conducted by you.

((■)) (ii) Continuous monitoring devices.

((■)) (iii) Visual appearance or odor of hazardous chemicals when being released.

((–)) (b) The physical and health hazards of chemicals in the work area.

((–)) (c) The procedures and measures employees can use to protect themselves from hazardous substances. Examples of these include:

((■)) (i) Appropriate work practices.

((■)) (ii) Emergency procedures.

((■)) (iii) Personal protective equipment.

((•)) (3) You must provide refresher training to fit your needs.

((•)) (4) You must provide information to employees on all of the following:

((–)) (a) The contents of this chapter and where to find a copy.

((–)) (b) Permissible exposure limits found in chapter 296-841 WAC, Respiratory hazards.

((–)) (c) Any recommended exposure levels for compounds without an exposure limit in the WISHA rules. Examples include:

((■)) (i) The PELs found in the National Institute for Occupational Safety and Health (NIOSH) NIOSH Pocket Guide to Chemical Hazards 2004; or

((■)) (ii) The American Conference of Governmental Industrial Hygienists (ACGIH®) Documentation of the Threshold Limit Values (TLVs) and Biological Exposure Indices (BEIs), 7th Ed.

((–)) (d) Signs and symptoms associated with exposures to hazardous chemicals used in the laboratory.

((–)) (e) Where to find a copy of:

((■)) (i) Your chemical hygiene plan.

((■)) (ii) Safety data sheets (SDSs), including those received from the chemical suppliers.

((■)) (iii) Reference material on the hazards, safe handling, storage, and disposal of hazardous chemicals found in the laboratory.

AMENDATORY SECTION (Amending WSR 14-07-086, filed 3/18/14, effective 5/1/14)

WAC 296-828-20020 Labeling and safety data sheets (SDSs). ((~~You must:~~

~~•~~)) (1) You must make sure labels on incoming containers are not removed or defaced.

((•)) (2) You must keep and make available to employees any SDS received with an incoming container of hazardous chemicals.

AMENDATORY SECTION (Amending WSR 14-07-086, filed 3/18/14, effective 5/1/14)

WAC 296-828-20025 Chemicals produced in laboratories. ((~~You must:~~)) You must follow Table 3 for chemical substances produced in your laboratory.

Table 3
Lab Produced Chemical Substance Requirements

If	Then
The chemical is a hazardous chemical	Follow all appropriate requirements of this chapter
A chemical by-product is produced and its composition is unknown	Assume it is a hazardous chemical ((~~AND~~)); and Follow your chemical hygiene plan to protect employees
You produce chemicals in your laboratory for users outside the laboratory	Follow WAC 296-901-14014, Safety data sheets and WAC 296-901-14012, Labels and other forms of warning

AMENDATORY SECTION (Amending WSR 07-03-163, filed 1/24/07, effective 4/1/07)

WAC 296-828-20030 Medical evaluations.

((~~IMPORTANT:~~)) **Important:**

For any of the specific substances listed in Table 2 of the scope of this chapter, you need to follow the medical evaluation procedures found in the chapters regulating those substances if employee exposure routinely exceeds the AL or PEL. For all other employee exposures follow this section to determine medical evaluation procedures.

((~~You must:~~))

(1) You must make medical evaluations available when:

((~~•~~)) (a) An employee develops signs or symptoms associated with a hazardous substance from laboratory exposure.

((~~•~~)) (b) Any emergency situation that could cause a hazardous exposure, such as a spill, leak, or explosion, occurs.

((~~•~~)) (c) A medical provider recommends a follow-up evaluation.

((~~•~~)) (d) Exposure monitoring for any of the substances found in Table 2 reveals exposures routinely over the action level (AL) or in the absence of an AL the permissible exposure level (PEL).

(2) You must make sure medical evaluations are provided at reasonable times and places, and at no cost to employees.

Note: This includes travel costs and wages associated with any time spent obtaining the medical evaluation.

((~~You must:~~

~~•~~)) (3) You must provide the LHCP the following information before the medical evaluation is performed:

((~~–~~)) (a) The name of the hazardous chemicals the employee may have been exposed to.

((–)) (b) Any signs or symptoms of exposure the employee has.

((–)) (c) A description of the conditions under which the exposure occurred.

((–)) (d) The exposure monitoring results for the conditions, if available.

((▲)) (4) You must obtain the LHCP's written opinion for each medical evaluation that includes the following:

((–)) (a) Recommendations for medical follow-up.

((–)) (b) Any medical conditions found that would increase the employee's risk for impairment from exposure to a hazardous chemical.

((–)) (c) A statement that the employee has been informed of exposure-related medical results and conditions that require further examination or treatment.

((–)) (d) A written opinion that does not contain any medical information unrelated to the employee's occupational exposures. ((■)) If the written opinion contains any medical information unrelated to occupational exposures, return it to the LHCP and obtain a revised version without the additional medical information.

Reference: ((▲)) For additional requirements relating to employee medical records, go to chapter 296-802 WAC, Employee medical and exposure records.

REPEALER

The following section of the Washington Administrative Code is repealed:

WAC 296-828-300 Definitions.

NEW SECTION

WAC 296-860-099 Definitions. The following definitions apply to this chapter:

Car width. Twice the distance from the centerline of a railroad car to its extreme outside part.

Common carrier. All railroads, railroad companies, street railroads, street railroad companies, corporations, partnerships, persons, cities or towns that own, operate, manage, or control any public use enterprise within Washington state that transports people or property for hire.

Department. The Washington state department of labor and industries.

Emergency. Any unforeseen occurrence that endangers life, limb, or property.

Icing platforms. Structures used to ice, precool, heat, ventilate or service private railroad cars that handle commodities requiring these services.

Over-crossing. Any point or place where a highway, road, or ramp carrying vehicular traffic crosses a private rail yard or track by passing above it.

Overhead clearance. The perpendicular distance between the top of the highest rail and the lowest point of an overhead structure or obstruction.

Private rail operation. A nonrailroad company operating railroad facilities, structures, tracks and equipment in the company's yard or plant. Chapter 296-860 WAC applies to:

(a) Any equipment, facility or structure owned or operated by the company; and

(b) The construction and reconstruction of tracks or structures adjacent to any facility or structure owned or operated by the company.

Railroad. Every public use railroad, other than street railroads, operated to transport people or property for hire. This definition also includes all bridges, ferries, tunnels, equipment, switches, spurs, tracks, stations, and terminal facilities of every kind that are used, operated, controlled, or owned by or in connection with any such public use railroad.

Side clearance. The shortest distance between the centerline of a track and a structure or other track side obstructions such as downspouts, ladders, equipment, piles of material or inventory, etc.

Track clearance. The shortest distance between the centerlines of adjacent railroad tracks.

Walkways. Pathways located alongside or in the vicinity of a railroad track, or on a trestle or bridge, providing space so a private railroad employee can perform duties associated with the track, trestle, or bridge.

AMENDATORY SECTION (Amending WSR 07-03-163, filed 1/24/07, effective 4/1/07)

WAC 296-860-100 Scope.

((~~IMPORTANT:~~)) Important:

This chapter applies to all railroad clearances and walkways in rail yards and plants including logging railroad yards such as mill yards, maintenance yards and sorting yards. If you are uncertain about which WISHA requirements to follow, you must comply with those that best protect employees' safety and health. Contact your local L&I office if you need assistance in making this decision.

((~~Exemptions:~~)) EXEMPTIONS:

((~~•~~)) These exemptions apply to chapter 296-860 WAC, Railroad clearances and walkways in private rail yards and plants, and do not require a department variance:

((~~–~~)) 1. You may move the following equipment, using less than the minimum standard clearances, if the situation is unavoidable and you have taken all reasonable steps to protect your employees:

((~~■~~)) a. Track construction or maintenance materials.

((~~■~~)) b. Special work equipment used for railroad construction, maintenance or operations.

((~~■~~)) c. Any railroad equipment during emergencies.

((~~–~~)) 2. You may have overhead or side clearances less than the minimum standard clearances required in this chapter if they were legally created before April 3, 1961.

((~~**Note:** If a building, structure, or facility constructed before April 3, 1961, is relocated or reconstructed, the clearance requirements in this chapter apply unless the department grants a variance.~~))

((~~–~~)) 3. Tracks built before April 3, 1961:

((~~■~~)) a. May be extended according to the legal track clearance requirements in effect when they were originally constructed.

((~~■~~)) b. Are exempt from the track clearance requirements in WAC 296-860-20060, Table 5.

((~~–~~)) 4. Chapter 296-54 WAC, Safety standards—Logging operations, regulates all logging railroads or any rail operations related to logging, except for yard clearances.

Note: If a building, structure, or facility constructed before April 3, 1961, is relocated or reconstructed, the clearance requirements in this chapter apply unless the department grants a variance.

Other rules that may apply to your workplace:

(1) The *((~~WISHA~~))* *DOSH Safety & Health Core Rules* book, chapter 296-800 WAC, contains the basic requirements that apply to employers in Washington. It also contains:

((~~•~~)) (a) An introduction that lists important information you should know, including a section on building, fire and electrical codes.

((~~•~~)) (b) A resource section that includes a complete list of all ((~~WISHA~~)) DOSH rules.

(2) Other ((~~WISHA~~)) DOSH rules may apply to you, depending upon the activities and operations of your workplace. Contact your local L&I office if you are uncertain about which ((~~WISHA~~)) DOSH requirements pertain to you.

((~~•~~)) (3) To access the *Safety & Health Core Rules* book online: ((~~http://www.lni.wa.gov/wisha/corerules/default.htm~~)) http://www.lni.wa.gov/safety/rules/chapter/800/default.asp

((~~•~~)) (4) For a CD or paper copy contact us:

Labor and Industries
P.O. Box 44620
Olympia, WA 98504-4620
Telephone: 1-800-4be-safe (1-800-423-7233)

AMENDATORY SECTION (Amending WSR 02-17-106, filed 8/21/02, effective 10/1/02)

WAC 296-860-200 Maintain safe clearances and walkways.

((~~SUMMARY~~)) **Summary**

Your responsibility:

To prevent injuries and fatalities to employees by maintaining safe railroad clearances and walkways in your rail yards and plants.

((~~**You must:**~~

~~Post warning signs and train employees about clearances approved before April 3, 1961~~

~~WAC 296-860-20010~~

~~Construct and maintain rail yard walkways for employee safety~~

~~WAC 296-860-20020~~

~~Install radiation detectors according to manufacturer's specifications~~

~~WAC 296-860-20030~~

~~Maintain overhead clearances~~

~~WAC 296-860-20040~~

~~Maintain side clearances~~

~~WAC 296-860-20050~~

~~Maintain clearances between tracks~~

~~WAC 296-860-20060~~

~~Move excessive height and/or width rail car loads with care~~

~~WAC 296-860-20070~~

~~Conduct narrow gauge rail operations according to the requirements of this section~~

~~WAC 296-860-20080.~~))

You must meet the requirements…	**in this section:**
Post warning signs and train employees about clearances approved before April 3, 1961	WAC 296-860-20010
Construct and maintain rail yard walkways for employee safety	WAC 296-860-20020
Install radiation detectors according to manufacturer's specifications	WAC 296-860-20030
Maintain overhead clearances	WAC 296-860-20040
Maintain side clearances	WAC 296-860-20050
Maintain clearances between tracks	WAC 296-860-20060
Move excessive height or width rail car loads with care	WAC 296-860-20070
Follow these requirements to conduct narrow gauge rail operations	WAC 296-860-20080

AMENDATORY SECTION (Amending WSR 02-17-106, filed 8/21/02, effective 10/1/02)

WAC 296-860-20010 Post warning signs and train employees about clearances approved before April 3, 1961. ((~~You must:~~)) (1) You must post warning signs near tracks with clearances approved before April 3, 1961, so employees are aware of the minimal clearances and their potential hazards. The signs must:

((–)) (a) Be highly visible.

((–)) (b) Be easy to read.

((–)) (c) Alert employees to the danger of railway equipment operating on your yard and plant tracks.

(2) You must include in your employee safety and health training information about:

((–)) (a) Any minimal clearances and their location.

((–)) (b) Potential hazards associated with them.

((–)) (c) The location of any clearance warning signs.

AMENDATORY SECTION (Amending WSR 07-03-163, filed 1/24/07, effective 4/1/07)

WAC 296-860-20020 Construct and maintain rail yard walkways for employee safety.

Important:

((•)) You have two years from October 01, 2002, (the effective date of this rule), to comply with the construction requirements of this section, unless the department determines during an inspection that your walkways create a serious safety hazard. ((•)) If you are not sure a serious safety hazard exists in your workplace, you can request a free consultation from the department by calling your local L&I office.

Construction of walkways

((~~You must:~~

~~•~~)) (1) You must build walkways in rail yard areas where employees regularly work on the ground.

((•)) (2) You must construct rail yard walkways that can be maintained in a safe condition:

((–)) (a) With reasonably smooth walking surfaces.

((–)) (b) That will not interfere with track drainage.

((•)) (3) You must use any of the following materials when constructing your walkway:

((–)) (a) Crushed material that does not exceed 1 1/2 inches in size. For this rule, "1 1/2 inches in size" means one of the following (percentages refer to weight measurement and sieve size standard in the industry):

Percentage of material passing through a sieve opening	Sieve opening size
100	1 1/2 inch square
90 - 100	1 inch square
40 - 80	3/4 inch square

Percentage of material passing through a sieve opening	Sieve opening size
15 - 60	1/2 inch square
0 - 30	3/8 inch square
0 - 10	#4
0 - 5	#8
0 - 0.5	#200

(b) Smaller crushed material is preferred and should be used where drainage and durability is not an issue. Crushed material that is 3/4 inch or less in size is recommended for switching leads in yards.

((~~•~~)) (c) Asphalt, concrete, planking, grating, or other similar material.

((~~•~~)) (d) Natural materials such as gravel or dirt.

((~~**You must:**~~

~~•~~)) (4) You must construct walkways wide enough for employees to safely perform their duties.

((~~•~~)) (5) You must construct walkways with a grade or slope in any direction with not more than one inch of elevation for each eight inches of horizontal length, unless it is geographically impractical.

Maintenance of walkways

((~~**You must:**~~

~~•~~)) (6) You must keep all walkways clear of vegetation, debris, mud, or other obstructions that create a potential hazard for employees.

((~~•~~)) (7) You must remove all standing water from all walkways as soon as reasonably possible.

((~~•~~)) (8) You must reopen walkways temporarily closed for a construction project within thirty days after the project is completed.

((~~**You must:**~~

~~•~~)) (9) You must repair walkways that have been damaged and temporarily closed because of an emergency within thirty days after the emergency ends.

((~~**Definition:**~~

~~Emergency: Any unforeseen occurrence endangering life, limb, or property.~~

~~•~~)) (10) You must obtain a department variance before permanently removing any bridge or trestle walkway from use after October 1, 2002 (the effective date of this rule).

Note: The requirements for filing a variance are located in the safety and health core rules and chapter 296-900 WAC, Administrative rules.

AMENDATORY SECTION (Amending WSR 02-17-106, filed 8/21/02, effective 10/1/02)

WAC 296-860-20030 Install radiation detectors according to manufacturer's specifications.

((~~IMPORTANT.~~)) Important:

This section applies only to those private yards and plants where the installation of radiation detectors beside railroad tracks is required due to the nature of the business; for example, scrap metal yards.

((~~You must:~~

~~•~~)) (1) You must install radiation detectors beside the railroad tracks in your yard and/or plant according to the manufacturer's specifications.

((~~•~~)) (2) You must post signs on each radiation detector installed less than eight feet six inches from the centerline of the track:

((–)) (a) Warning employees that the side clearances between the detector and the track centerline are less than the required standard minimum side clearances found in this chapter.

((–)) (b) Prohibiting employees from riding on the side of any rail car passing through the detector.

AMENDATORY SECTION (Amending WSR 07-03-163, filed 1/24/07, effective 4/1/07)

WAC 296-860-20040 Maintain overhead clearances.

((~~Exemption:~~)) EXEMPTION:

Engine houses and car shops are exempt from the overhead clearance requirements of this section.

((~~You must:~~

~~•~~)) You must make sure overhead railroad clearances are at least twenty-two feet six inches unless a clearance requirement found in Table 1 applies.

Note: ((•)) 1. Clearance requirements are based on the assumption that generally used rail equipment in private yards and plants is no more than ten feet ten inches wide by fifteen feet six inches high.
((•)) 2. WAC 296-860-20070 regulates the use of any rail equipment that exceeds the above dimensions.
((•)) 3. Minimum vertical clearances for all overhead wires are specified in Parts 1, 2, and 3 of the National Electrical Safety Code (NESC) as referenced in WAC 296-45-045, electrical workers safety rules, NESC applicable. See NESC 231 and 232.

Table 1 - Minimum Overhead Clearances for Buildings, Structures, Tunnels, and Bridges

If your overhead clearance involves:	Then the minimum overhead clearance requirements are:
An entirely enclosed building	18 feet when tracks end inside an entirely enclosed building. Also: • The department must approve any reduction from 22 feet 6 inches before the reduction takes place. • If an overhead clearance is less than 22 feet 6 inches, all cars, locomotives or other equipment must come to a full stop before entering the building. • See Illustration 1.
All other structures	Defined by the half-circumference of a circle whose: • Radius is 8 feet 6 inches ((~~AND~~)); and • Center is located on a line perpendicular to the track's centerline and 14 feet above the top of the highest rail. • See Illustration 1.

If your overhead clearance involves:	**Then the minimum overhead clearance requirements are:**
Tunnels, over-crossings, and bridges	Defined by the half-circumference of a circle whose: • Radius is 8 feet ((~~AND~~)); and • Center is located on a line perpendicular to the track's centerline and 14 feet 6 inches above the top of the highest rail. • See Illustration 1.

Illustration 1 - Minimum Overhead Clearances for Buildings, Structures, Tunnels, and Bridges

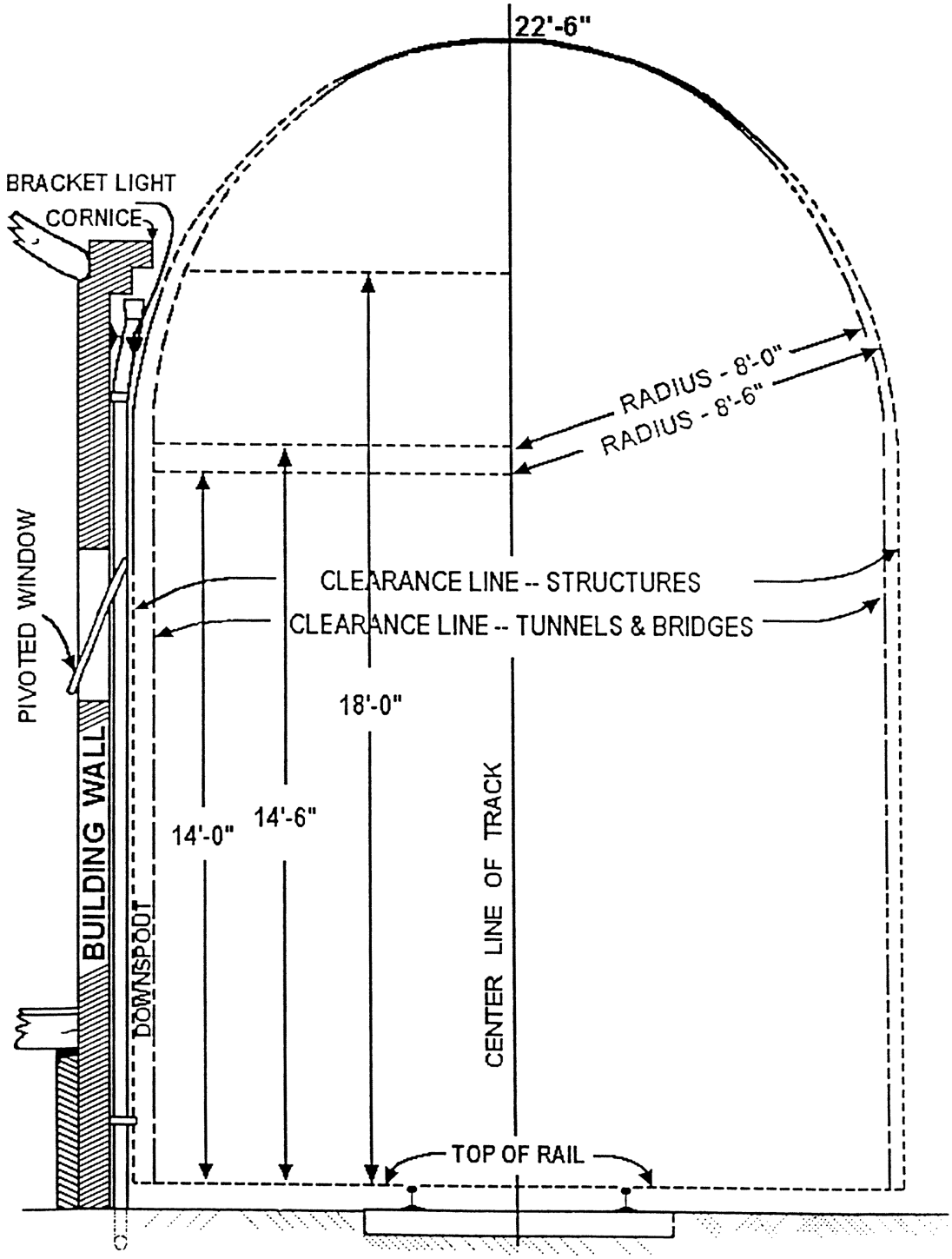

AMENDATORY SECTION (Amending WSR 07-03-163, filed 1/24/07, effective 4/1/07)

WAC 296-860-20050 Maintain side clearances.

((~~You must:~~

~~•~~)) You must make sure side clearances are at least eight feet six inches from the track centerline unless clearance requirements found in Tables 2, 3, or 4 apply.

Note: All side clearances in Tables 2, 3, and 4 that reference "the track centerline" are based on the assumption that private rail operations generally use track that is standard gauge width (4 feet 8 1/2 inches).

Table 2 - Minimum Side Clearance for Platforms

If Your Platform Type is:	**Then the Minimum Clearance Requirements Between the Track Centerline and a Platform Edge are:**
Type 1 Platforms with heights of 8 inches or less above the top of the rail.	4 feet 8 inches See Illustration 2.
Type 2 Platforms with heights of 4 feet or less above the top of the rail.	7 feet 3 inches See Illustration 2.
Type 3 Platforms with heights of 4 feet 6 inches or less above the top of the rail and the platforms are used primarily for loading and/or unloading refrigerator cars.	8 feet See Illustration 2.
Type 4 Icing platforms and supports.	7 feet 3 inches See Illustration 2.
Type 5 Retractable platforms attached to permanent structures.	When not in use, use the clearance requirements for a platform of its height.
Type 6 **Platforms that are a combination** of Types 1 through 3. (Only Types 1 through 3 platforms can be combined.)	**Platforms may be combined** if the Type 1 platform has a level surface no more than 4 feet 8 inches from the track centerline to the face of the platform wall with which it is combined.

Illustration 2 - Minimum Side Clearances for Platforms

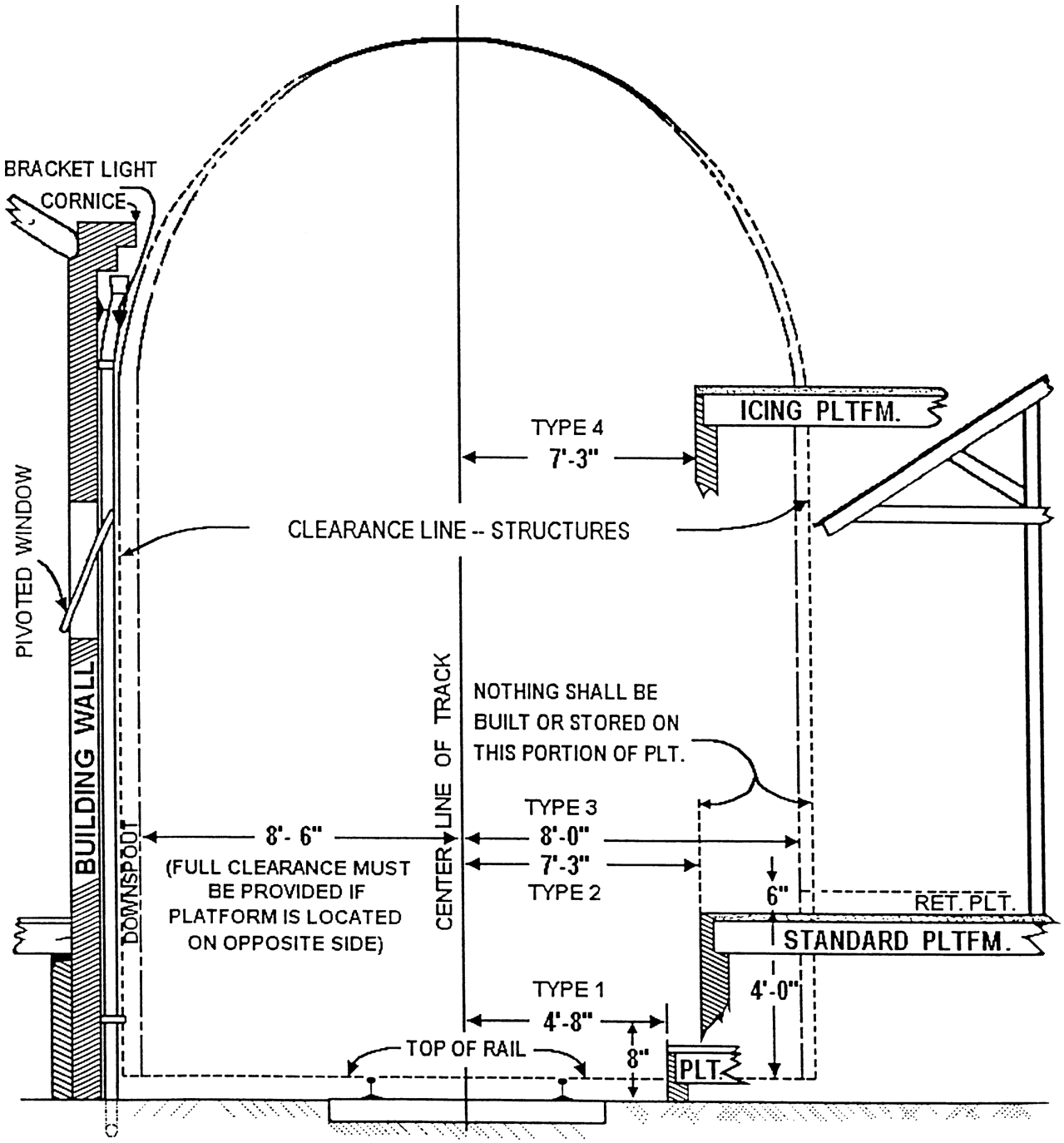

((~~Table 3 - Minimum Side Clearances for Bridges, Tunnels and Related Structures~~))

((~~Exemption:~~)) ((•)) Except for handrail and water barrel clearances, the clearance requirements in Table 3 do not apply to bridge decks where railroad
EXEMPTION: employees couple or uncouple cars on a switching lead unless the department approves them.

Note: ((•)) The requirements for filing a variance are located in the Safety and health core rules and chapter 296-900 WAC, Administrative rules.

Table 3 - Minimum Side Clearances for Bridges, Tunnels and Related Structures

If your side clearance requirement involves:	**Then the minimum side clearance requirements between the track centerline and the bridge, tunnel or related structure are:**
Bridge and tunnel sides - lower section	8 feet
Bridge and tunnel sides - upper section	Defined by the half-circumference of a circle whose: • Radius is 8 feet ((~~AND~~)); and • Center is located on a line perpendicular to the track's centerline and 14 feet 6 inches above the top of the highest rail. • See Illustration 3.
Related structures on bridges and in tunnels - lower section structures (or portions of them) that are no more than 4 feet above the top of the rail. For example: • Refuge platforms on bridges and trestles. • Water columns, oil columns, and block signals. • Cattle chutes.	Defined by lines extending: • 5 feet laterally from the track centerline to a point level with the top of the rail and then diagonally upward to another point 4 feet above the top of the rail ((~~AND~~)); and • 8 feet laterally from the track centerline to a point 4 feet above the top of the rail. • See Illustration 3A. The shaded portion of the illustration designates the area that must be free of refuge platforms, water columns, oil columns, block signals and cattle chutes.
Hand rails and water barrels	7 feet 6 inches
Fences of cattle guards	6 feet 9 inches

Illustration 3 - Minimum Side Clearances for Bridges, Tunnels and Related structures

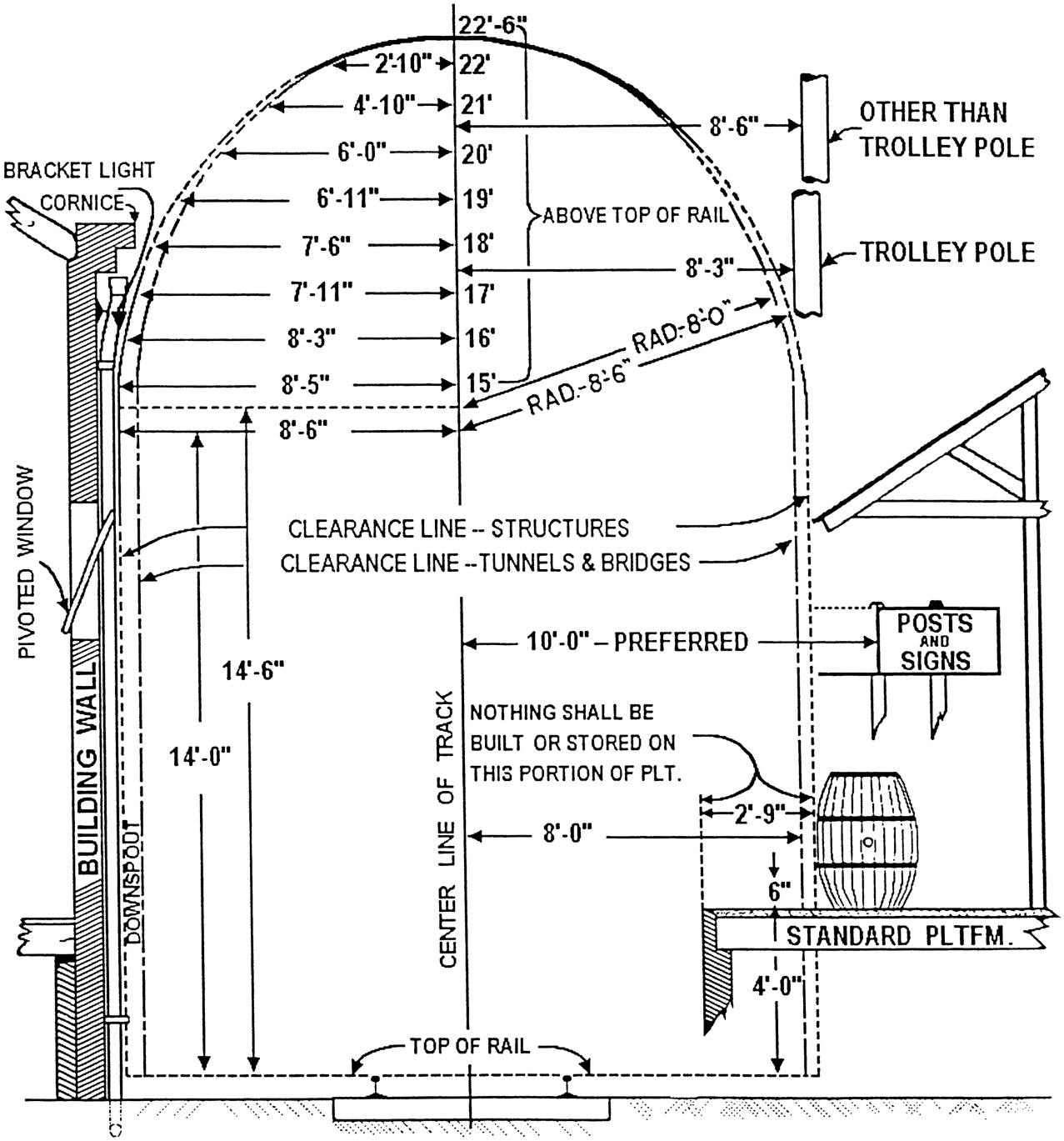

Illustration 3A - Minimum Side Clearance for Certain Structures in or on the Lower Sections of Bridges and Tunnels

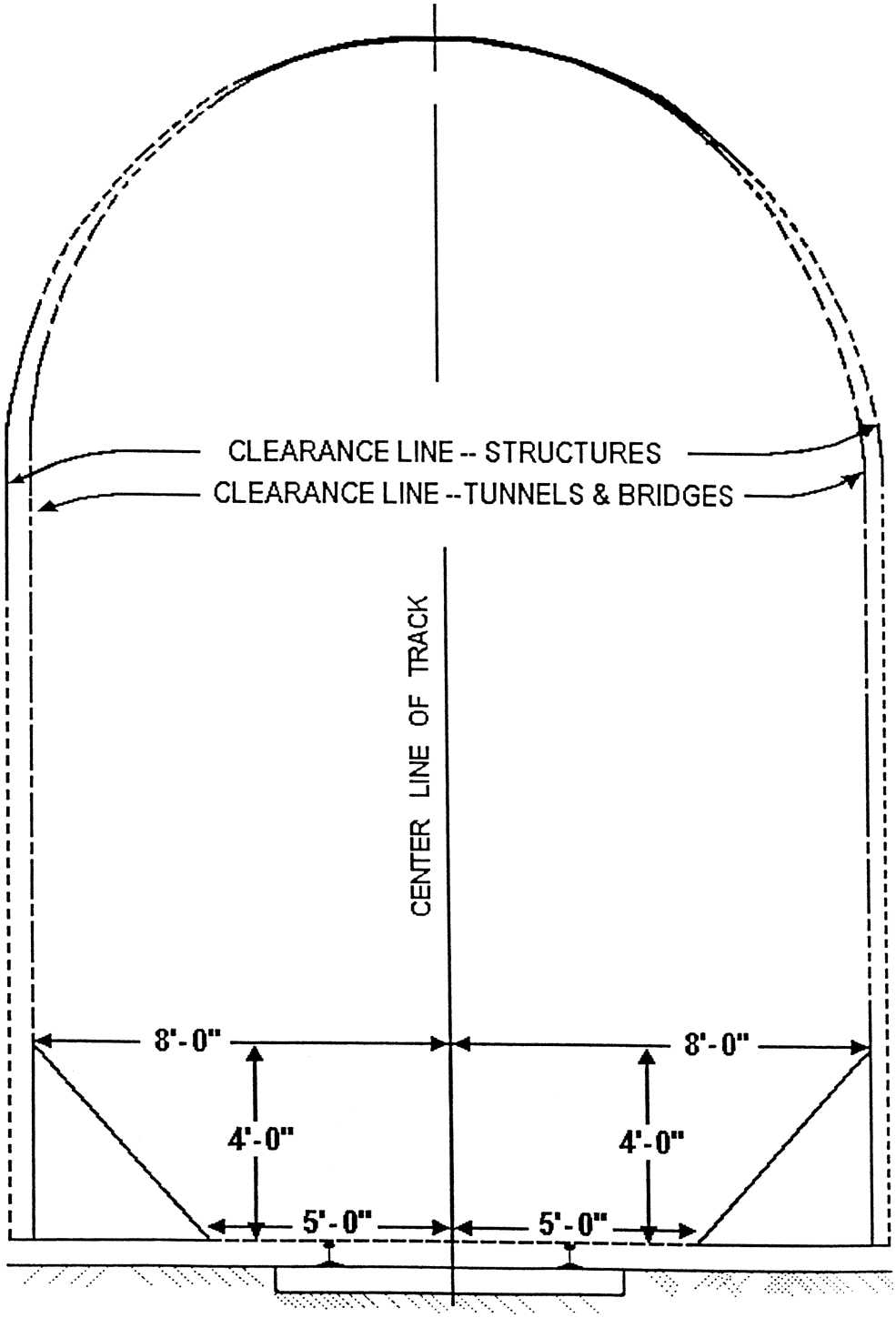

((~~Table 4 - Other Minimum Side Clearance Requirements*~~))

Note: ((•)) 1. The department must approve all minimum clearances for car pulling units and related structures.
((•)) 2. The requirements for filing a variance are located in the Safety and health core rules and chapter 296-900 WAC, Administrative rules.

Table 4 - Other Minimum Side Clearance Requirements*

If your side clearance requirement involves:	Then the minimum side clearance requirements from the track centerline are:
Type A Engine house and car repair shop doors.	7 feet 6 inches
Type B Interlocking mechanism, switch boxes, and other similar devices projecting no more than 4 feet above the top of the rail.	3 feet
Type C Poles supporting trolley contact.	8 feet 3 inches
Type D Signals and switch stands no more than 3 feet high and located between tracks where it is not possible to allow other clearances required in this chapter.	6 feet
Type E Signals and switch stands other than those described in Type B and Type D.	8 feet
Type F Material, merchandise, inventory, storage bins or equipment stacked or stored on ground or platforms adjacent to tracks.	8 feet 6 inches **Note:** This requirement does not apply to: • Railroad maintenance operations • Emergency situations • Local conditions that make compliance impossible.
Type G Space adjacent to curved track.	Increased to equal tangent track clearances. As a general rule, side clearances on curved track should be increased 1-1/2" for each degree of curvature.

* Table 4 does not have an accompanying illustration.

AMENDATORY SECTION (Amending WSR 02-17-106, filed 8/21/02, effective 10/1/02)

WAC 296-860-20060 Maintain clearances between tracks. ((~~You must:~~

~~•~~)) You must comply with the track clearance requirements in Table 5.

Table 5 - Minimum Standard Gauge Track Clearances

If your track clearance involves:	Then the minimum clearance requirements between centerlines of standard gauge parallel tracks are:
Main or passing tracks used for transporting cars, locomotives, motors, or like equipment	14 feet
Any tracks adjacent to main or passing tracks	15 feet
Team, house, or industry tracks	13 feet
Yard tracks	14 feet
Ladder and other tracks	20 feet

Note: The following illustration will help you understand the track clearance requirements discussed in this section and WAC 296-860-20080 regulating narrow gauge rail operations.

STANDARD GAUGE TRACK CLEARANCES

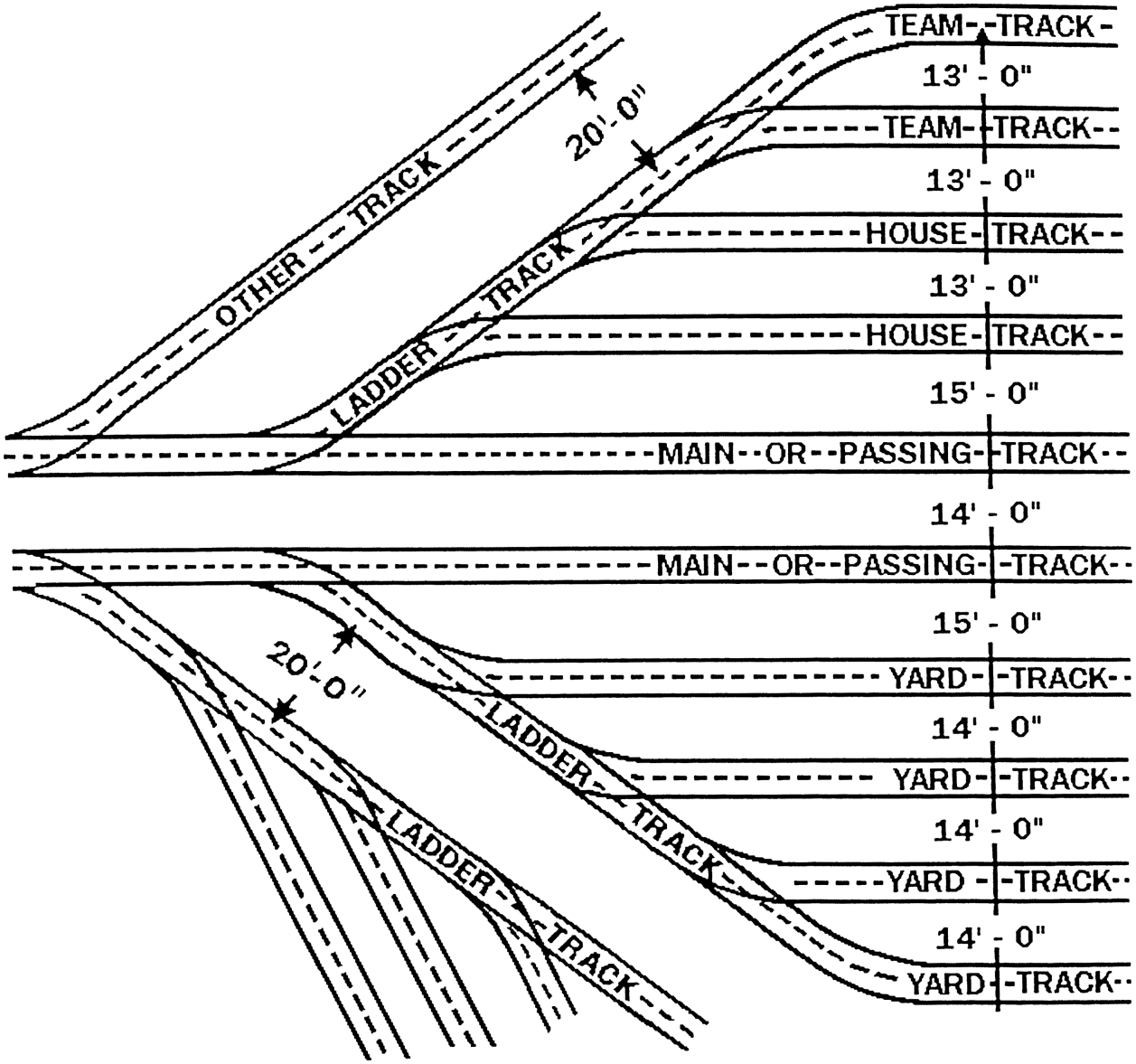

AMENDATORY SECTION (Amending WSR 02-17-106, filed 8/21/02, effective 10/1/02)

WAC 296-860-20070 Move excessive height or width rail car loads with care.

Note: This section regulates rail cars whose dimensions exceed ten feet ten inches wide by fifteen feet six inches high.

((~~You must:~~

~~•~~)) (1) You must make sure your yard supervisor is given advanced notice regarding the arrival of any excess height or width cars so they can safeguard any employees working in the yard.

((~~•~~)) (2) You must make sure no one is allowed to ride on the:

((–)) (a) Roof of any excessive height car.

((–)) (b) Side of any excessive width car.

((~~(~~)) (c) Side of any car with a load extending more than five feet five inches from the car's centerline.

AMENDATORY SECTION (Amending WSR 02-17-106, filed 8/21/02, effective 10/1/02)

WAC 296-860-20080 Follow these requirements to conduct narrow gauge rail operations. ((~~**You must:**~~

~~•~~)) (1) You must base your clearance measurements upon your widest narrow gauge cars.

((~~•~~)) (2) You must make sure the distance between the cars and objects on narrow gauge track is equal to or greater than the distance required between ten foot ten inch wide cars and other cars or objects on standard gauge track.

((~~•~~)) (3) You must comply with all other applicable requirements in this chapter.

REPEALER

The following section of the Washington Administrative Code is repealed:

WAC 296-860-300 Definitions.

NEW SECTION

WAC 296-864-099 Definitions. Barrier. A fence, wall or other object placed between a single-piece rim wheel and an employee during tire inflation that will contain the components if the air in the tire is suddenly released.

Charts.

(a) The United States Department of Labor, Occupational Safety and Health Administration publications entitled "*Demounting and Mounting Procedures for Truck/Bus Tires*" and "*Multi-Piece Rim Matching Chart*";

(b) The National Highway Traffic Safety Administration (NHTSA) publications entitled "*Demounting and Mounting Procedures for Truck/Bus Tires*" and "*Multi-Piece Rim Matching Chart*"; or

(c) Any other poster that contains at least the same instructions, safety precautions and other information contained in the charts applicable to the types of wheels being serviced.

Demounting. Deflating and taking apart a tire and rim wheel.

Installing a rim wheel. The transfer and attachment of an assembled rim wheel onto a vehicle axle hub.

Mounting a tire. The putting together of the wheel and tire components to form a rim wheel, including inflation.

Restraining device. Is a cage or rack that will hold all rim wheel components during an explosive separation of a multipiece rim wheel or during the sudden release of air in a single-piece rim wheel.

Rim manual. Is a publication containing instructions from the manufacturer or other qualified organization for correct mounting, demounting, maintenance, and safety precautions for the type of wheel being serviced.

Service or **servicing.** The mounting and demounting of rim wheels, and related activities such as inflating, deflating, installing, removing, and handling.

Service area. Any place where an employee services rim wheels.

Single-piece rim wheel. A single part holds the tire, forms part of the air chamber and is the point where the wheel is attached to the vehicle axle.

Split rim wheel or **multipiece rim wheel.** A wheel made up of two or more parts. One of the parts is a side ring or locking ring that holds the tire on the wheel when the tire is inflated.

Trajectory. The path that a rim wheel component may travel during an explosive separation or the sudden release of air.

Wheel. That portion of a rim wheel that attaches to the axle of a vehicle and also contains the inflated tire or tire and tube.

AMENDATORY SECTION (Amending WSR 04-20-079, filed 10/5/04, effective 2/1/05)

WAC 296-864-100 Scope.

Note: This rule is intended to protect employees from hazards associated with the exploding separation of rim wheel components.

This chapter applies to the protection of employees who service split rim wheels and single-piece rim wheels used on large vehicles. For example:

((•)) 1. Trucks;
((•)) 2. Tractors;
((•)) 3. Trailers;
((•)) 4. Buses; ((~~AND~~)) and

((•)) 5. Off-road machines.

((~~**Exemption:**~~)) **EXEMPTION:** This chapter does not apply to the servicing of rim wheels used on:

((•)) 1. Automobiles; ((~~**OR**~~)) or
((•)) 2. Tires designated as light truck (LT).

Note: The tire designation can be found on the sidewall of the tire.

((~~**Definition:**~~

~~**Split rim wheel** or **multipiece rim wheel,** means a wheel made up of two or more parts. One of the parts is a side ring or locking ring that holds the tire on the wheel when the tire is inflated.~~

~~**Single-piece rim wheel** means a single part holds the tire, forms part of the air chamber and is the point where the wheel is attached to the vehicle axle.~~))

AMENDATORY SECTION (Amending WSR 04-20-079, filed 10/5/04, effective 2/1/05)

WAC 296-864-200 Wheel components.

Summary((~~:~~))

Your responsibility:

To make sure rim wheels are serviced safely.

((~~**You must:**~~

~~Make sure wheel components are compatible WAC 296-864-20005.~~

~~Make sure rim wheels are serviced safely WAC 296-864-20010.~~

~~Make sure damaged wheel components are not used WAC 296-864-20015.~~))

You must meet the requirements…	**in this section:**
Make sure wheel components are compatible	WAC 296-864-20005
Make sure rim wheels are serviced safely	WAC 296-864-20010
Make sure damaged wheel components are not used	WAC 296-864-20015

AMENDATORY SECTION (Amending WSR 04-20-079, filed 10/5/04, effective 2/1/05)

WAC 296-864-20005 Make sure wheel components are compatible. ((~~**You must:**~~

~~•~~)) (1) You must make sure tires and rim wheels are compatible before assembly.

((~~•~~)) (2) You must make sure split rim wheel components are not interchanged, except as provided in:

((~~–~~)) (a) The Occupational Safety and Health Administration (OSHA) and National Highway Traffic Safety Administration (NHTSA) charts, "*Demounting and Mounting Procedures for Truck/Bus Tires*" and "*Multi-Piece Rim Matching Chart*((~~,~~))" ((~~**OR**~~

–)); or
(b) The rim manual for that component.

Note: Reprints of these charts, "*Demounting and Mounting Procedures for Truck/Bus Tires*" and "*Multi-Piece Rim Matching Chart*," are available:
((•)) 1. Through the WISHA Training and Outreach office at 360-902-5638.
((•)) 2. Through the OSHA area offices. The address and telephone number of the nearest OSHA area office can be obtained by looking in the local telephone directory under U.S. Government, U.S. Department of Labor, Occupational Safety and Health Administration.
((•)) 3. From the OSHA web site at http://www.osha.gov/pls/publications/pubindex.continue.
((•)) 4. Through U.S. Postal Service at:

OSHA Publications Office
U.S. Department of Labor Occupational Safety and Health Administration
((~~Room N3101~~)) 200 Constitution Ave. N.W.
Washington D.C. 20210((,))
Telephone: ((~~202-523-9667~~)) 202-693-1888.

AMENDATORY SECTION (Amending WSR 04-20-079, filed 10/5/04, effective 2/1/05)

WAC 296-864-20010 Make sure rim wheels are serviced safely. ((~~You must:~~
~~•~~)) (1) You must inspect split rim wheel components and single-piece wheels prior to assembly.
((~~•~~)) (2) You must make sure the following are free of any dirt, surface rust, scale or loose or flaked rubber build-up prior to mounting and inflation:
((–)) (a) Rim flanges;
((–)) (b) Rim gutters;
((–)) (c) Rings;
((–)) (d) Bead seating surfaces; ((~~AND~~
–)) and
(e) The bead areas of tires.
((~~•~~)) (3) You must make sure you do not heat any rim wheels at any time.
((~~•~~)) (4) You must make sure you do not repair any rim wheel that is:
((–)) (a) Cracked;
((–)) (b) Broken;
((–)) (c) Bent; ((~~OR~~
–)) or
(d) Damaged.

Note: Repair includes activities such as striking with a hammer and heating rim wheel components.

((~~•~~)) (5) You must provide and make sure that an air line assembly consisting of the following components is used for inflating tires:
((–)) (a) A clip-on chuck;
((–)) (b) An in-line valve with a pressure gauge or a presettable regulator; ((~~AND~~
–)) and
(c) A sufficient length of hose between the clip-on chuck and the in-line valve, if one is used, to allow the employee to stand outside the trajectory.

Reference: For additional requirements relating to compressed air tools, see WAC 296-807-140, Compressed air tools, in portable power tools.

AMENDATORY SECTION (Amending WSR 04-20-079, filed 10/5/04, effective 2/1/05)

WAC 296-864-20015 Make sure damaged wheel components are not used. ((~~You must:~~

~~•~~)) (1) You must make sure any wheel or wheel component that is bent out of shape, pitted from corrosion, broken or cracked is:

((~~–~~)) (a) Not used;

((~~–~~)) (b) Marked or tagged unserviceable; ((~~AND~~

~~–~~)) and

(c) Removed from the service area.

((~~•~~)) (2) You must replace damaged or leaky valves

((~~SPLIT (MULTIPIECE) RIM AND SINGLE-PIECE RIM WHEELS~~))

AMENDATORY SECTION (Amending WSR 04-20-079, filed 10/5/04, effective 2/1/05)

WAC 296-864-300 Restraint devices.

Your responsibility:

To make sure your restraint devices are safe.

((~~You must:~~

~~Use a restraining device~~

~~WAC 296-864-30005.~~

~~Make sure the restraint device meets these requirements~~

~~WAC 296-864-30010.~~

~~Provide charts or rim manuals~~

~~WAC 296-864-30015.~~))

You must meet the requirements…	**in this section:**
Use a restraining device	WAC 296-864-30005
Make sure the restraint device meets these requirements	WAC 296-864-30010
Provide charts or rim manuals	WAC 296-864-30015

AMENDATORY SECTION (Amending WSR 04-20-079, filed 10/5/04, effective 2/1/05)

WAC 296-864-30005 Use a restraining device. ((~~You must:~~

~~•~~)) (1) You must use a restraining device for inflating tires on split rim wheels.

((~~•~~)) (2) You must use a restraining device or barrier for inflating tires on single-piece wheels.

((~~**Exemption:**~~)) **EXEMPTION:** A restraining device or barrier is not required for single-piece rim wheels, if the rim wheel will be bolted onto a vehicle during inflation.

AMENDATORY SECTION (Amending WSR 04-20-079, filed 10/5/04, effective 2/1/05)

WAC 296-864-30010 Make sure the restraint device meets these requirements. ((~~**You must:**~~

~~•~~)) (1) You must make sure the restraining device or barrier can withstand a rim wheel separation that occurs at one hundred fifty percent of the maximum tire pressure specified.

((~~•~~)) (2) You must make sure the restraining devices and barriers will contain any components that may be thrown out during a wheel separation of any rim wheel.

((~~•~~)) (3) You must make sure restraining devices and barriers are visually inspected:

((~~–~~)) (a) Prior to each day's use; ((~~**AND**~~

~~–~~)) and

(b) After any separation of the rim wheel components or sudden release of air.

((~~•~~)) (4) You must make sure any restraining device or barrier that shows damage is immediately removed from service. Examples of damage include:

((~~–~~)) (a) Cracks at welds;

((~~–~~)) (b) Cracked or broken components;

((~~–~~)) (c) Bent or sprung components caused by mishandling, abuse, tire explosion or rim wheel separation;

((~~–~~)) (d) Pitting of components due to corrosion; ((~~**OR**~~

~~–~~)) or

(e) Other structural damage that would decrease its effectiveness.

((~~•~~)) (5) You must make sure restraining devices or barriers removed from service are not used until they are repaired and reinspected.

((~~•~~)) (6) You must make sure restraining devices or barriers that need structural repair are not used until they are certified by either:

((~~–~~)) (a) The manufacturer; ((~~**OR**~~

~~–~~)) or

(b) A registered professional engineer.

Note: The certification needs to show that the barrier can withstand a force of one hundred fifty percent of the maximum tire pressure in the event of wheel separation.

AMENDATORY SECTION (Amending WSR 04-20-079, filed 10/5/04, effective 2/1/05)

WAC 296-864-30015 Provide charts or rim manuals. ((~~**You must:**~~

~~•~~)) (1) You must provide current charts or rim manuals containing instructions for the types of wheels being serviced in the service area.

((~~•~~)) (2) You must provide and use only tools recommended in the rim manual for the specific type of rim wheel being serviced.

AMENDATORY SECTION (Amending WSR 04-20-079, filed 10/5/04, effective 2/1/05)

WAC 296-864-400 Service split rim wheels safely.

Your responsibility:

To establish and use procedures to service split rim wheels safely.

((~~**You must:**~~

~~Establish a safe operating procedure for split rim wheels~~

~~WAC 296-864-40005.~~

~~Follow these procedures for demounting split rim wheels~~

~~WAC 296-864-40010.~~

~~Follow these procedures when working on split rim wheels and components~~

~~WAC 296-864-40015.~~

~~Follow these procedures for inflating split rim wheels~~

~~WAC 296-864-40020.~~))

You must meet the requirements…	**in this section:**
Establish a safe operating procedure for split rim wheels	WAC 296-864-40005
Follow these procedures for demounting split rim wheels	WAC 296-864-40010
Follow these procedures when working on split rim wheels and components	WAC 296-864-40015
Follow these procedures for inflating split rim wheels	WAC 296-864-40020

AMENDATORY SECTION (Amending WSR 04-20-079, filed 10/5/04, effective 2/1/05)

WAC 296-864-40005 Establish a safe operating procedure for split rim wheels. ((~~**You must:**~~

~~•~~)) (1) You must establish a safe operating procedure for servicing split rim wheels that includes the procedures in WAC 296-864-40010 through 296-864-40020.

((~~•~~)) (2) You must instruct employees in that procedure.

AMENDATORY SECTION (Amending WSR 04-20-079, filed 10/5/04, effective 2/1/05)

WAC 296-864-40010 Follow these procedures for demounting split rim wheels. ((~~You must:~~

~~•~~)) You must follow the relevant procedures in Table 1, Procedures for Deflating Split Rim Wheels.

Table 1
Procedures for Demounting Split Rim Wheels

During these times:	**Then:**
Demounting rim wheels.	Make sure tires are completely deflated before demounting by removal of the valve core.
During either of the following situations: ((–)) The tire has been driven underinflated at ((~~eighty~~)) 80 percent or less of its recommended pressure; ((~~OR~~)) or ((–)) There is obvious or suspected damage to the tire or wheel components.	Deflate the tires completely by removing the valve core, before a rim wheel is removed from the axle.

AMENDATORY SECTION (Amending WSR 04-20-079, filed 10/5/04, effective 2/1/05)

WAC 296-864-40015 Follow these procedures when working on split rim wheels and components. ((~~You must:~~

~~•~~)) You must follow the relevant procedures in Table 2, Procedures for Working on Split Rim Wheels and Components.

Table 2
Procedures for Working on Split Rim Wheels and Components

During these times:	**Then:**
A split rim wheel is in a restraining device.	Make sure employees do not rest or lean any part of the body or equipment on or against the restraining device.
Assembly of the wheel and inflation of the tire.	Apply rubber lubricant to bead and rim mating surfaces, unless the tire or wheel manufacturer recommends against it.
After tire inflation.	Do both of the following: Inspect the tire and wheel components while still within the restraining device; ((~~AND~~)) and

During these times:	Then:
	Make sure that they are properly seated and locked.
When adjusting the tire or wheel components.	Deflate the tire by removal of the valve core before the adjustment is made.

AMENDATORY SECTION (Amending WSR 04-20-079, filed 10/5/04, effective 2/1/05)

WAC 296-864-40020 Follow these procedures for inflating split rim wheels. ((~~You must:~~

~~•~~)) You must follow the relevant procedures in Table 3, Procedures for Inflating Split Rim Wheels.

Table 3
Procedures for Inflating Split Rim Wheels

During these times:	Then:
Split rim wheels are being inflated.	Make sure employees stay out of the trajectory.
When all of the following occur: A tire on a vehicle has more than ((~~eighty~~)) 80 percent of the recommended pressure; ((~~AND~~)) and Remote control inflation equipment is used; ((~~AND~~)) and No employees are in the trajectory during inflation.	The tire may be inflated while the rim wheel is on the vehicle.
Assembly of the wheel and inflation of the tire.	Apply rubber lubricant to bead and rim mating surfaces, unless the tire or wheel manufacturer recommends against it.
Inflating tires outside of a restraining device.	Make sure you do not exceed 5 psi (pounds per square inch) to seat the bead.
The tire is pressurized.	Make sure you don't correct the seating of side and lock rings by hammering, striking or forcing the components.

Note: ((•)) 1. Employees should stay out of the trajectory as much as possible while installing the split rim wheel onto the vehicle.
((•)) 2. The trajectory may deviate from its expected path.

AMENDATORY SECTION (Amending WSR 04-20-079, filed 10/5/04, effective 2/1/05)

WAC 296-864-500 Service single-piece rim wheels safely. Your responsibility:

To establish and use procedures to service single-piece rim wheels safely.

((~~**You must:**~~

~~Establish a safe operating procedure for single-piece rim wheels WAC 296-864-50005.~~

~~Follow these procedures for demounting single-piece rim wheels WAC 296-864-50010.~~

~~Follow these procedures when working on single-piece rim wheel components WAC 296-864-50015.~~

~~Follow these procedures for inflating single-piece rim wheels WAC 296-864-50020.~~))

You must meet the requirements…	**in this section:**
Establish a safe operating procedure for single-piece rim wheels	WAC 296-864-50005
Follow these procedures for demounting single-piece rim wheels	WAC 296-864-50010
Follow these procedures when working on single-piece rim wheel components	WAC 296-864-50015
Follow these procedures for inflating single-piece rim wheels	WAC 296-864-50020

AMENDATORY SECTION (Amending WSR 04-20-079, filed 10/5/04, effective 2/1/05)

WAC 296-864-50005 Establish a safe operating procedure for single-piece rim wheels. ((~~**You must:**~~

~~•~~)) (1) You must establish a safe operating procedure for servicing single-piece rim wheels that includes the procedures in WAC 296-864-50010 through 296-864-50020.

((~~•~~)) (2) You must instruct employees in that procedure.

AMENDATORY SECTION (Amending WSR 04-20-079, filed 10/5/04, effective 2/1/05)

WAC 296-864-50010 Follow these procedures for demounting single-piece rim wheels. ((~~**You must:**~~

~~•~~)) You must follow the relevant procedures in Table 4, Procedures for Demounting Single-Piece Wheel Components.

Table 4
Procedures for Demounting Single-Piece Rim Wheels

During these times:	**Then:**
At all times.	Make sure mounting and demounting of the tire is done only from the narrow ledge side of the wheel.
When demounting rim wheels.	Make sure tires are completely deflated before demounting by removal of the valve core.

AMENDATORY SECTION (Amending WSR 04-20-079, filed 10/5/04, effective 2/1/05)

WAC 296-864-50015 Follow these procedures when working on single-piece rim wheels and components. ((~~You must:~~ ~~•~~)) You must follow the relevant procedures in Table 5, Procedures for Working on Single-Piece Wheel Components.

Table 5
Procedures for Working on Single-Piece Rim Wheel Components

During these times:	**Then:**
At all times.	Avoid damaging the tire beads while mounting tires on wheels.
At all times.	Make sure tires are mounted only on compatible wheels of matching bead diameter and width.
Before assembly of the rim wheel.	Apply rubber lubricant to bead and wheel mating surfaces, unless the tire or wheel manufacturer recommends against the use of any rubber lubricant.
When using a tire changing machine.	Make sure the tire is inflated only to the minimum pressure necessary to force the tire bead onto the rim ledge while on the tire changing machine.
When using a bead expander.	Make sure it is removed: ((–)) Before the valve core is installed; ((~~AND~~)) and ((–)) As soon as the rim wheel becomes airtight (the tire bead slips onto the bead seat).

Note: You should not inflate tires above 40 psi to seat the bead.

AMENDATORY SECTION (Amending WSR 04-20-079, filed 10/5/04, effective 2/1/05)

WAC 296-864-50020 Follow these procedures for inflating single-piece rim wheels. ((~~You must:~~

~~•~~)) (1) You must inflate tires only when contained within a restraining device or bolted on the vehicle with the lug nuts fully tightened.

((~~•~~)) (2) You must make sure tires are not inflated when any flat, solid surface is in the trajectory and within one foot of the sidewall.

((~~•~~)) (3) You must make sure employees stay out of the trajectory when inflating a tire.

((~~•~~)) (4) You must make sure, when inflating tires, that the inflation pressure stamped in the sidewall isn't exceeded unless the manufacturer recommends a higher pressure.

((~~•~~)) (5) You must make sure tires aren't inflated above the maximum pressure recommended by the manufacturer to seat the tire bead firmly against the rim flange.

AMENDATORY SECTION (Amending WSR 04-20-079, filed 10/5/04, effective 2/1/05)

WAC 296-864-600 Employee training.

Your responsibility:

To train employees to service split rim and single-piece rim wheels.

((~~**You must:**~~

~~Train employees who service rim wheels~~

~~WAC 296-864-60005.~~

~~Make sure employees demonstrate and retain the ability to service rim wheels safely~~

~~WAC 296-864-60010.~~))

You must meet the requirements…	**in this section:**
Train employees who service rim wheels	WAC 296-864-60005
Make sure employees demonstrate and retain the ability to service rim wheels safely	WAC 296-864-60010

AMENDATORY SECTION (Amending WSR 04-20-079, filed 10/5/04, effective 2/1/05)

WAC 296-864-60005 Train employees who service rim wheels. ((~~**You must:**~~

~~•~~)) (1) You must train all employees who service rim wheels.

((•)) (2) You must make sure that employees do not service any rim wheel until they have been trained and instructed in:

((–)) (a) Correct procedures of servicing the type of wheel being worked on; ((~~AND~~

–)) and

(b) The safe operating procedures described in:

((■)) (i) WAC 296-864-400, Service split rim wheels safely; ((~~AND~~

■)) and

(ii) WAC 296-864-500, Service single-piece rim wheels safely.

((•)) (3) You must make sure the training program explains the hazards involved in servicing those rim wheels and the safety procedures to be followed.

((•)) (4) You must make sure the training program includes, at a minimum, the applicable data from the:

((–)) (a) Charts;

((–)) (b) Rim manuals; ((~~AND~~

–)) and

(c) Contents of this standard.

AMENDATORY SECTION (Amending WSR 04-20-079, filed 10/5/04, effective 2/1/05)

WAC 296-864-60010 Make sure employees demonstrate and retain the ability to service rim wheels safely. ((~~You must:~~

•)) (1) You must make sure that each employee demonstrates the ability to service rim wheels safely, including performing the following tasks for the specified type of rim wheel in Table 6.

Table 6
Required Training Tasks

Required Task	Split Rim	Single-Piece Rim
Demounting and deflation of tires((.))	X	X
Inspection and identification of the rim wheel components((.))	X	X
Hazards of mixing 16" ((~~and~~)) BS 16.5" tires and rims((.))		X
Mounting of tires((.))	X	X
Inflation of tires with a restraining device or other safeguard required by this section((.))	X	X
Use of the restraining device or barrier, and other equipment required by this section((.))	X	X
Handling of rim wheels((.))	X	X
Inflation of the tire when a rim wheel is mounted on a vehicle((.))		X
The hazards associated with standing in front of a split rim or single-piece rim wheel:	X	X

Required Task	Split Rim	Single-Piece Rim
((–)) During inflation of the tire; ((–)) During inspection of the rim wheel following inflation; ((~~AND~~)) and ((–)) Installation and removal of rim wheels.		

((~~**You must:**~~

~~•~~)) (2) You must make sure any employee that is unable to read the charts or rim manual is effectively trained on their contents.

((~~•~~)) (3) You must evaluate each employee's ability to perform these tasks and to service rim wheels safely.

((~~•~~)) (4) You must provide additional training as necessary to make sure that each employee maintains his or her proficiency.

Helpful tool:

Training checklist

The optional training checklist can help you monitor the training status of your employees. You can find this checklist in the resources section of this chapter.

REPEALER

The following section of the Washington Administrative Code is repealed:

WAC 296-864-700 Definitions.