Resources

HELPFUL TOOLS

Boom Supported Elevated Work Platforms R-3
Manually Propelled Elevated Work Platforms R-4
Self Propelled Elevated Work Platforms..... R-5

Notes

Boom Supported Elevated Work Platforms

Use with the Elevating Work Platforms rule, Chapter 296-869 WAC

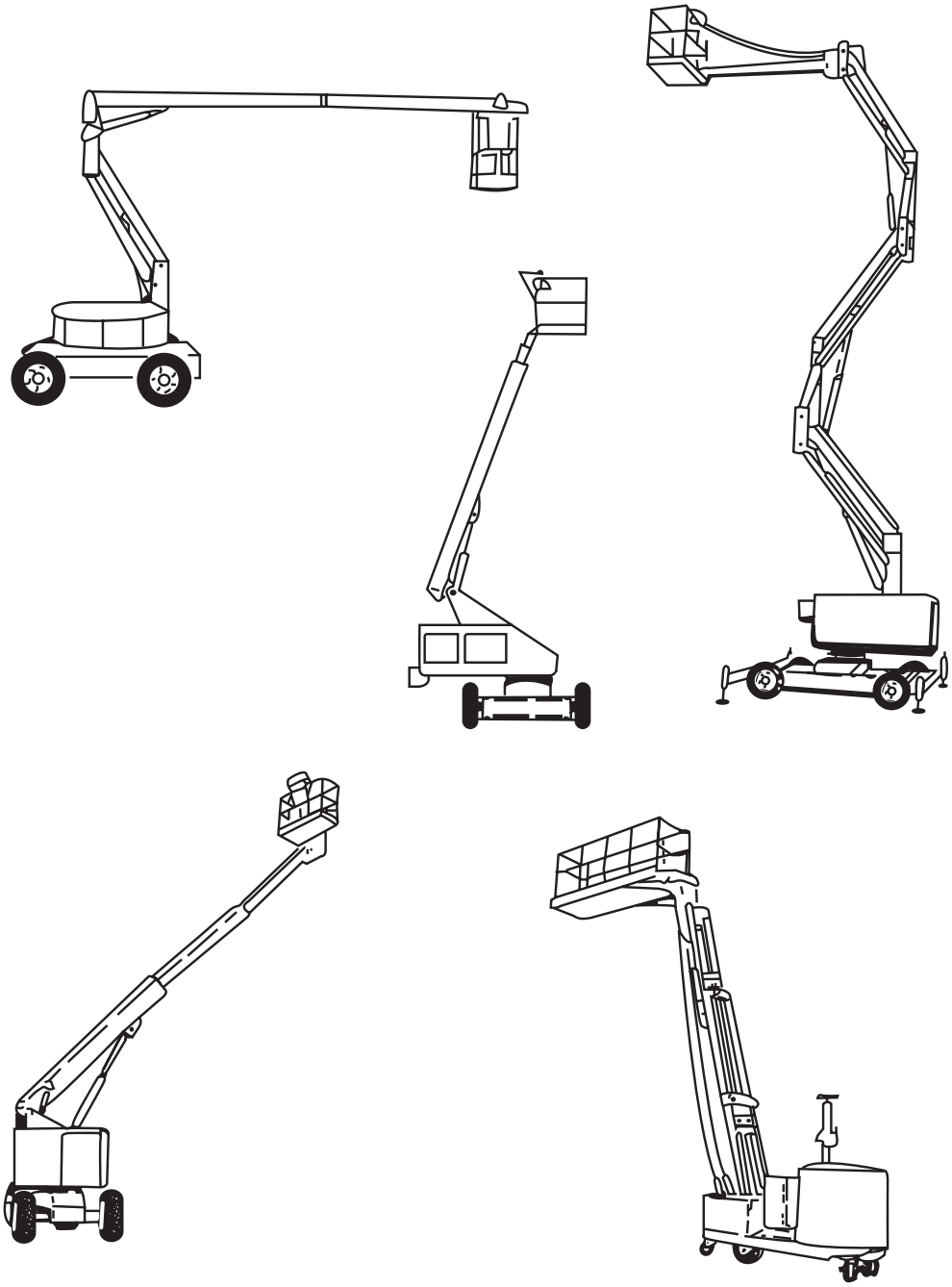

Resources

Manually Propelled Elevated Work Platforms

Use with the Elevating Work Platforms rule, Chapter 296-869 WAC

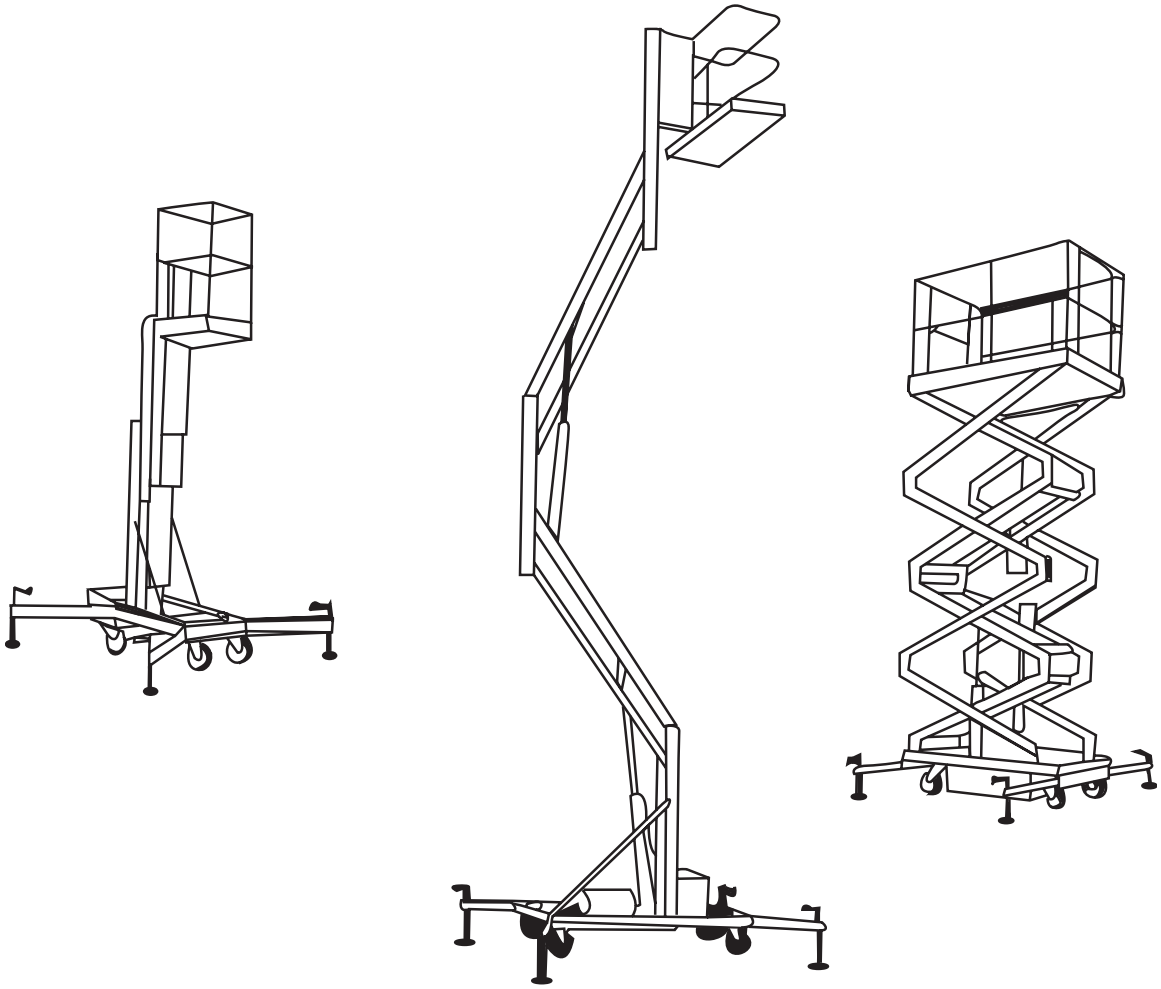

Resources

Self Propelled Elevated Work Platforms

Use with the Elevating Work Platforms rule, Chapter 296-869 WAC

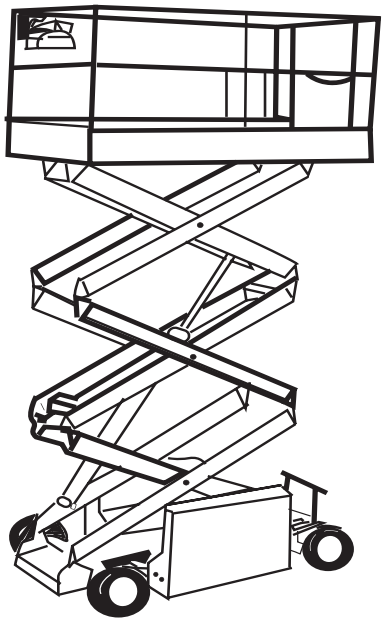

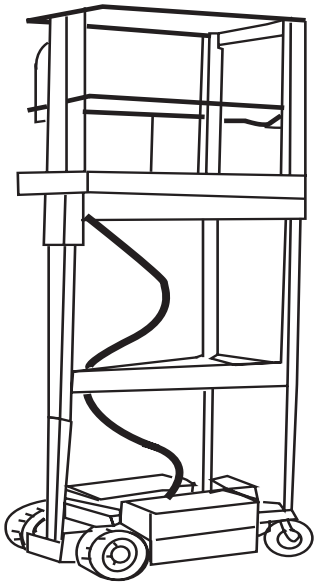

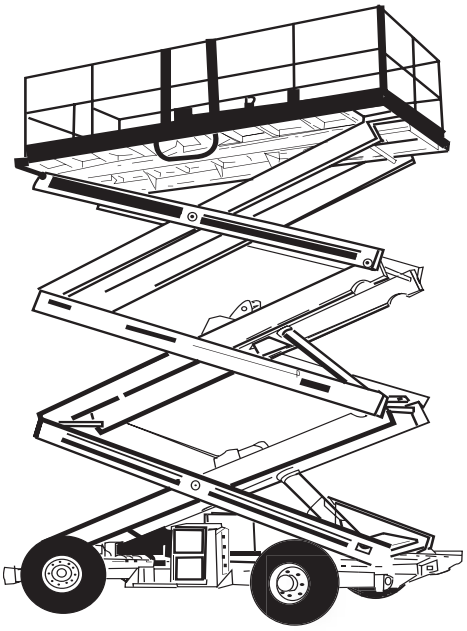

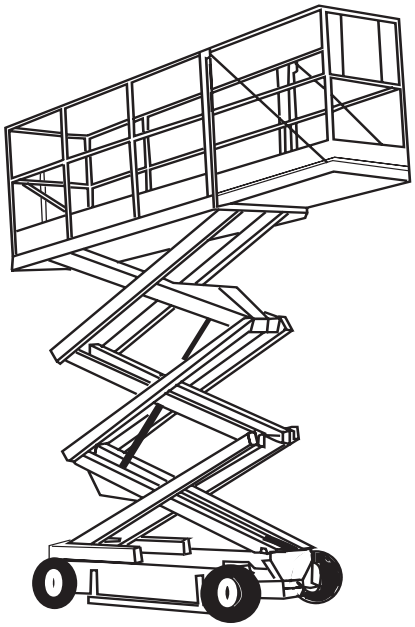

Resources

Notes