WISHA Department of Labor & Industries

Machine Safety

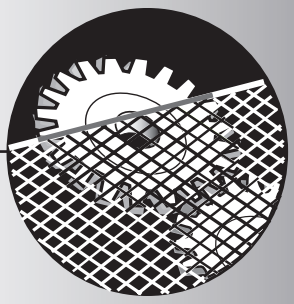

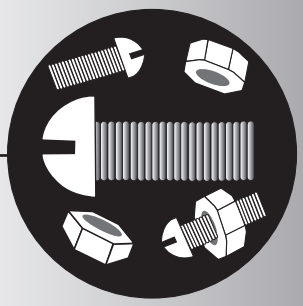

Chapter 296-806

January 2005 Edition

Washington Industrial Safety & Health Act

F414-125-000

1/2005 printing

Department of LABOR AND INDUSTRIES

Standards Update to

Chapter 296-806 WAC, Machine Safety

Issue Date 12/2004
Effective Date 1/1/2005

The Department of Labor and Industries has rewritten and reorganized for clarity and ease of use the safety standards for machine safety. The machine safety rules, in chapter 296-24 WAC, Part C, and chapter 296-302 WAC were rewritten and adopted as chapter 296-806 WAC. **Please discard chapter 296-24 WAC, Part C, and chapter 296-302 WAC.**

To receive future updates of this standard and all other Department of Labor and Industries safety and health standards electronically, please sign up on the WISHA Listserv (http://www.lni.wa.gov/Safety/Rules/default.htm). By subscribing to the Listserv, you will also receive rule updates, hearing notices, and informational packets for all safety and health rules.

Also available on the WISHA web site:

- WISHA Core Rules
- Other General WISHA Rules
- Industry and Task-specific Rules
- Proposed rules and hearings
- Newly adopted rules and new rule information
- WISHA Regional Directives (WRDs)
- WISHA Interim Operations and Interpretive Memoranda (WIIM)
- Memoranda of Understanding (MOU)

To receive hardcopy updates of this rule, please return the card located at the back of the book.

Machine Safety

WAC 296-806

Quick Reference

TITLE **PAGE**

Scope
WAC 296-806-100 100-1

Requirements for All Machines
WAC 296-806-200 200-1

Requirements for Specific Machine Hazards
WAC 296-806-300 300-1

Additional Requirements for Some Machines and Machine Operations
WAC 296-806-400 400-1

Abrasive Wheels and Machines
WAC 296-806-405 405-1

Calenders
WAC 296-806-410 410-1

Compactors
WAC 296-806-415 415-1

Conveyors
WAC 296-806-420 420-1

Food Processing Equipment
WAC 296-806-425 425-1

Forging Machines
WAC 296-806-430 430-1

Garbage (Waste) Disposals
WAC 296-806-435 435-1

Glue Spreaders
WAC 296-806-440 440-1

Machine Safety

WAC 296-806

Quick Reference

Ironworkers
WAC 296-806-445 445-1

Lathes
WAC 296-806-450 450-1

Mechanical Power Presses
WAC 296-806-455 455-1

Mills
WAC 296-806-460 460-1

Press Brakes
WAC 296-806-465 465-1

Roll-forming and Bending Machines
WAC 296-806-470 470-1

Sanding Machines
WAC 296-806-475 475-1

Saws and Cutting Heads
WAC 296-806-480 480-1

Sewing Machines
WAC 296-806-485 485-1

Definitions 500-1

Resources R-1

Index IN-1

Statutory Authority SA-1

Machine Safety

WAC 296-806

Chapter Contents

TITLE **PAGE**

Scope
WAC 296-806-100 100-1

Requirements for All Machines
WAC 296-806-200 200-1

Workplace

Secure machines designed to stay in one place
WAC 296-806-20002 200-1

Protect employees from slipping hazards around machinery
WAC 296-806-20004 200-1

Arrange work areas to avoid creating hazards
WAC 296-806-20006 200-2

Machine controls and operation

Make sure operating controls meet these requirements
WAC 296-806-20008 200-3

Protect employees from unintentional machine operation
WAC 296-806-20010 200-4

Make sure emergency stop controls meet these requirements
WAC 296-806-20012 200-4

Control machine vibration
WAC 296-806-20014 200-5

Prevent overspeed conditions
WAC 296-806-20016 200-5

Make sure hand feeding and retrieval tools meet these requirements
WAC 296-806-20018 200-6

Protect employees who are adjusting or repairing machinery
WAC 296-806-20020 200-7

Machine Safety

WAC 296-806

Chapter Contents

Power transmission parts

Keep power transmission equipment in good working condition
WAC 296-806-20022 200-8

Inspect power transmission parts
WAC 296-806-20024 200-8

Protect employees lubricating moving machinery
WAC 296-806-20026 200-9

SAFEGUARDING REQUIREMENTS

Safeguard employees from the point of operation
WAC 296-806-20028 200-10

Safeguard employees from nip or shear point hazards
WAC 296-806-20030 200-10

Safeguard employees from rotating or revolving parts
WAC 296-806-20032 200-11

Safeguard employees from reciprocating or other moving parts
WAC 296-806-20034 200-11

Safeguard employees from flying objects
WAC 296-806-20036 200-11

Safeguard employees from falling objects
WAC 296-806-20038 200-11

Safeguard employees from hazards created by moving surfaces with hazards such as sharp edges, burrs, and protruding nails and bolts
WAC 296-806-20040 200-12

SAFEGUARDING METHODS

Guards

Make sure guards meet these requirements
WAC 296-806-20042 200-13

Chapter Contents

Devices

Make sure devices meet these requirements
WAC 296-806-20044 200-16

Make sure light curtains meet these requirements
WAC 296-806-20046 200-17

Make sure pressure-sensitive mats meet these requirements
WAC 296-806-20048 200-18

Make sure restraint or pullback devices meet these requirements
WAC 296-806-20050 200-19

Make sure two-hand devices meet these requirements
WAC 296-806-20052 200-20

Make sure devices used with barrier guards meet these requirements
WAC 296-806-20054 200-21

Distance

Make sure safeguarding by distance meets these requirements
WAC 296-806-20056 200-22

Make sure guardrails used for safeguarding meet these requirements
WAC 296-806-20058 200-25

Requirements for Specific Machine Hazards
WAC 296-806-300 300-1

Fit arbors and mandrels to the machine
WAC 296-806-30002 300-1

Safeguard belt and rope drives
WAC 296-806-30004 300-2

Make sure belt or rope drives meet these requirements
WAC 296-806-30006 300-5

Machine Safety

WAC 296-806

Chapter Contents

Protect employees while shifting belts on belt and pulley drives
WAC 296-806-30008 300-6

Make sure belt tighteners meet these requirements
WAC 296-806-30010 300-8

Safeguard cams, connecting rods, tail rods, and extension piston rods
WAC 296-806-30012 300-9

Safeguard chain and sprocket drives
WAC 296-806-30014 300-10

Safeguard fan blades
WAC 296-806-30016 300-10

Safeguard flywheels
WAC 296-806-30018 300-12

Safeguard gears
WAC 296-806-30020 300-13

Safeguard projections on moving parts
WAC 296-806-30022 300-14

Safeguard pulleys
WAC 296-806-30024 300-15

Make sure pulleys meet these requirements
WAC 296-806-30026 300-16

Safeguard revolving drums, barrels, and containers
WAC 296-806-30028 300-16

Safeguard shafting
WAC 296-806-30030 300-17

Make sure shafting meets these requirements
WAC 296-806-30032 300-18

Safeguard unused keyways
WAC 296-806-30034 300-18

Chapter Contents

Make sure revolving collars meet these requirements
WAC 296-806-30036 300-19

Safeguard counterweights
WAC 296-806-30038 300-19

Additional Requirements for Some Machines and Machine Operations
WAC 296-806-400 400-1

Abrasive Wheels

Make sure abrasive wheels and machines are properly designed and constructed
WAC 296-806-40502 405-5

Make sure machines have safety guards
WAC 296-806-40504 405-6

Make sure safety guards meet specific requirements
WAC 296-806-40506 405-7

Provide a tongue guard on bench, pedestal, floorstand, and cylindrical grinders
WAC 296-806-40508 405-9

Use a work rest for off-hand grinding
WAC 296-806-40510 405-10

Make sure abrasive wheels are safe to use
WAC 296-806-40512 405-11

Mount wheels properly
WAC 296-806-40514 405-12

Use proper flanges
WAC 296-806-40516 405-13

Make sure flanges are in good condition
WAC 296-806-40518 405-14

Use specific flanges for Type 1 cutting-off wheels
WAC 296-806-40520 405-15

Chapter Contents

Use specific flanges for Type 27A cutting-off wheels
WAC 296-806-40522 405-15

Use blotters when required
WAC 296-806-40524 405-16

Meet specific blotter requirements when using modified Types 6 and 11 wheels (terrazzo)
WAC 296-806-40526 405-16

Calenders
WAC 296-806-410 410-1

Provide calender safety controls
WAC 296-806-41002 410-2

Follow these stopping limit requirements for calendars
WAC 296-806-41004. 410-4

Compactors
WAC 296-806-415 415-1

Safeguard hazardous moving parts of stationary compactors
WAC 296-806-41502 415-2

Follow these requirements for compactor controls
WAC 296-806-41504 415-3

Follow these requirements for compactor access doors and covers
WAC 296-806-41506 415-4

Follow these requirements for compactors that cycle automatically
WAC 296-806-41508. 415-4

Conveyors
WAC 296-806-420 420-1

Follow these requirements for conveyors
WAC 296-806-42002 420-6

Provide emergency stops on conveyors
WAC 296-806-42004 420-6

Chapter Contents

Label conveyor controls
WAC 296-806-42006 420-7

Prohibit riding on conveyors
WAC 296-806-42008 420-8

Provide safe access to conveyors
WAC 296-806-42010 420-8

Provide backstop or anti-runaway devices on incline, decline, or vertical conveyors
WAC 296-806-42012 420-9

Make only safe alterations to conveyors
WAC 296-806-42014 420-9

Inspect and replace worn of conveyor parts
WAC 296-806-42016 420-9

Follow these requirements for replacing conveyor parts
WAC 296-806-42018 420-10

Follow these requirements for spill guards
WAC 296-806-42020 420-10

Provide pedestrian overpasses for conveyors
WAC 296-806-42022 420-11

Guard openings to hoppers and chutes
WAC 296-806-42024 420-12

Install guideposts
WAC 296-806-42026 420-13

Belt Conveyors

Guard nip points on belt conveyors
WAC 296-806-42028 420-14

Install emergency stop controllers on overland belt conveyors
WAC 296-806-42030 420-15

Install belt conveyor overpasses
WAC 296-806-42032 420-16

Chapter Contents

Chain Conveyors

Safeguard chain conveyors
WAC 296-806-42034 420-17

Guard return strands on chain conveyors
WAC 296-806-42036 420-17

Guard chain conveyors that are used as a transfer mechanism
WAC 296-806-42038 420-18

Elevator Conveyors

Prevent material from falling off of elevator conveyors
WAC 296-806-42040 420-18

Inclined Reciprocating Conveyors (Shakers)

Provide protection where employees must load shakers
WAC 296-806-42042 420-19

Provide grating over silo and bunker openings for shuttle conveyors
WAC 296-806-42044 420-19

Mobile Conveyors

Guard wheels and rails on mobile conveyors
WAC 296-806-42046 420-20

Prevent hazardous motion on mobile conveyors
WAC 296-806-42048 420-20

Provide a detector for mobile conveyors
WAC 296-806-42050 420-21

Provide safe access on mobile conveyors
WAC 296-806-42052 420-21

Pusher Bar Conveyors

Guard pusher-bar conveyors
WAC 296-806-42054 420-21

Chapter Contents

Roller Conveyors

Prohibit walking on roller-type conveyors
WAC 296-806-42056 420-22

Use speed controls for roller and wheel conveyors
WAC 296-806-42058 420-22

Safeguard belt-driven live roller conveyors
WAC 296-806-42060 420-23

Screw Conveyors

Guard screw conveyors
WAC 296-806-42062 420-24

Skip Hoists

Provide slack-cable switches on hoists
WAC 296-806-42064 420-25

Block the skip bucket and counterweight guides
WAC 296-806-42066 420-25

Protect against wire rope coming off sheaves
WAC 296-806-42068 420-25

Slat And Roller Slat Conveyors

Safeguard slat and roller-slat conveyors
WAC 296-806-42070 420-26

Towed Conveyors

Provide a safe method for disengaging the tow pin
WAC 296-806-42072 420-26

Protect employees from moving carts on towed conveyors
WAC 296-806-42074 420-27

Provide clearances and warnings for carts on towed conveyors
WAC 296-806-42076 420-27

Mark projections above the floor
WAC 296-806-42078 420-28

Machine Safety

WAC 296-806

Chapter Contents

Food Processing Equipment
WAC 296-806-425 425-1

Facilities

Provide locks on chamber doors of large air conditioning units
WAC 296-806-42502 425-7

Use proper door locks on rack-type bread coolers
WAC 296-806-42504 425-7

Provide see-through panels on fermentation room doors
WAC 296-806-42506 425-7

Cover exposed hot pipes
WAC 296-806-42508 425-8

Provide extension piping on stationary lubrication fittings
WAC 296-806-42510 425-8

Provide hoods for pan washing tanks
WAC 296-806-42512 425-8

Safeguard proof boxes
WAC 296-806-42514 425-9

Safeguard storage bins
WAC 296-806-42516 425-10

Material Handling

Follow these design requirements for bag lifts (bag arm elevators) and chutes
WAC 296-806-42518 425-11

Follow these requirements for chain tackle
WAC 296-806-42520 425-12

Safeguard conveyors
WAC 296-806-42522 425-12

Use properly designed covers for screw conveyors (augers)
WAC 296-806-42524 425-13

Safeguard pallet jacks and hand trucks
WAC 296-806-42526 425-13

Chapter Contents

Specific Food Processing Equipment

Safeguard bakery slicers
WAC 296-806-42528 425-14

Safeguard bakery wrapping machines
WAC 296-806-42530 425-14

Provide troughs with antifriction-bearing casters
WAC 296-806-42532 425-15

Follow these requirements for trough hoists and similar equipment
WAC 296-806-42534 425-15

Follow these requirements for dividers
WAC 296-806-42536 425-16

Safeguard manually-fed dough and cross-roll brakes
WAC 296-806-42538 425-17

Provide a guard or tripping device on reversible dough brakes
WAC 296-806-42540 425-18

Follow these requirements for doughnut machines
WAC 296-806-42542 425-18

Follow these requirements for dumpbins and blenders
WAC 296-806-42544 425-19

Follow these requirements for flour-handling machines
WAC 296-806-42546 425-20

Follow these requirements for traveling or track-type flour scales
WAC 296-806-42548 425-20

Follow these requirements for food grinders and cutters
WAC 296-806-42550 425-21

Provide covers with interlocks on ingredient premixers, emulsifiers, and similar machines
WAC 296-806-42552 425-21

Follow these requirements for open fat kettles
WAC 296-806-42554 425-22

Machine Safety

WAC 296-806

Chapter Contents

Follow these requirements for steam kettles
WAC 296-806-42556 425-22

Follow these requirements for chocolate melting, refining, and mixing kettles
WAC 296-806-42558 425-22

Safeguard meat-processing equipment (circular meat-cutting saws)
WAC 296-806-42560 425-23

Follow these requirements for horizontal dough mixers
WAC 296-806-42562 425-24

Follow these requirements for vertical mixers
WAC 296-806-42564 425-26

Follow these requirements for mechanical-feed moulders
WAC 296-806-42566 425-27

Follow these requirements for hand-fed moulders
WAC 296-806-42568 425-28

Design, install, and construct your ovens according to these requirements
WAC 296-806-42570 425-28

Properly locate emergency “stop” buttons and main shut-off valves for ovens
WAC 296-806-42572 425-29

Inspect and test safety devices on ovens
WAC 296-806-42574 425-29

Follow these requirements for peanut-cooling trucks
WAC 296-806-42576 425-30

Follow these requirements for pretzel rolling, pretzel stick extruding, rotary, and die machines
WAC 296-806-42578 425-30

Safeguard box and roll-type dough sheeters
WAC 296-806-42580 425-31

Chapter Contents

Provide proper enclosures for sifters
WAC 296-806-42582 425-31

Follow these requirements for sugar and spice pulverizers
WAC 296-806-42584. 425-32

Forging Machines
WAC 296-806-430 430-1

General Requirements For Forging Machines

Follow these safety requirements when using lead and lead casts
WAC 296-806-43002 430-4

Properly inspect and maintain forging equipment
WAC 296-806-43004 430-5

Use safety blocks on hammers and presses
WAC 296-806-43006 430-5

Make sure tongs meet these requirements
WAC 296-806-43008 430-7

Protect employees when removing scale
WAC 296-806-43010 430-8

Provide adequate foundations for hammers and presses
WAC 296-806-43012 430-8

Follow these requirements for manually-operated valves and switches
WAC 296-806-43014 430-9

Hammers

Use die keys and shims made of proper-grade metal
WAC 296-806-43016 430-10

Provide a safety cylinder head
WAC 296-806-43018 430-10

Provide a shutoff valve
WAC 296-806-43020 430-11

Chapter Contents

Provide a means for cylinder draining
WAC 296-806-43022 430-11

Follow these requirements for pressure pipes
WAC 296-806-43024 430-12

Follow these requirements when using board hammers
WAC 296-806-43026 430-12

Other Forge Facility Equipment

Protect against sparks from saws
WAC 296-806-43028 430-13

Garbage (Waste) Disposals
WAC 296-806-435 435-1

Safeguard garbage (waste) disposal equipment
WAC 296-806-43502 435-2

Glue Spreaders
WAC 296-806-440 440-1

Provide guards and automatic shut-offs on glue spreaders
WAC 296-806-44002. 440-2

Ironworkers
WAC 296-806-445 445-1

Safeguard ironworkers point of operation
WAC 296-806-44502 445-2

Follow these requirements for adjustable restrictors when safeguarding ironworkers
WAC 296-806-44504 445-2

Lathes
WAC 296-806-450 450-1

Metal Lathes

Provide shields or guards on metal lathes for chip or coolant hazards
WAC 296-806-45002 450-3

Chapter Contents

Safeguard work-holding devices (chucks)
WAC 296-806-45004 450-3

Follow these requirements for chip control and handling
WAC 296-806-45006 450-4

Safeguard power-clamping devices
WAC 296-806-45008 450-4

Restrain extended workpieces on horizontal lathes
WAC 296-806-45010 450-5

Woodworking Lathes

Guard cutting heads on profile and swing-head lathes
WAC 296-806-45012 450-6

Guard cutting heads on turning lathes
WAC 296-806-45014 450-6

Guard automatic turning lathes
WAC 296-806-45016 450-7

Guard wood lathes used for turning long pieces of stock
WAC 296-806-45018 450-7

Mechanical Power Presses
WAC 296-806-455 455-1

Design And Construction

Make sure mechanical power presses are properly designed and constructed
WAC 296-806-45502 455-5

Safeguarding

Safeguard presses that use unitized tooling
WAC 296-806-45504 455-6

Protect operators from guidepost hazards
WAC 296-806-45506 455-6

Safeguard the point of operation
WAC 296-806-45508 455-7

Machine Safety

WAC 296-806

Chapter Contents

Make sure point-of-operation guards are properly designed and constructed
WAC 296-806-45510 455-8

Make sure barrier guards meet these requirements
WAC 296-806-45512 455-9

Make sure point-of-operation devices are effective
WAC 296-806-45514 455-10

Make sure presence-sensing devices used to safeguard the point of operation meet these requirements
WAC 296-806-45516 455-11

Make sure pull-back devices used to safeguard the point of operation meet these requirements
WAC 296-806-45518 455-13

Make sure restraint (holdout) devices used to safeguard the point of operation meet these requirements
WAC 296-806-45520 455-14

Make sure two-hand control devices used to safeguard the point of operation meet these requirements
WAC 296-806-45522 455-15

Make sure two-hand trip devices used to safeguard the point of operation meet these requirements
WAC 296-806-45524 455-16

Provide additional safeguards when the operator puts one or both hands into the point of operation
WAC 296-806-45526 455-17

Operations

Establish die setting procedures
WAC 296-806-45528 455-19

Handle dies safely
WAC 296-806-45530 455-20

Protect die setters during setup and tryout
WAC 296-806-45532 455-20

Chapter Contents

Train press operators
WAC 296-806-45534 455-21

Operate mechanical power presses safely
WAC 296-806-45536 455-21

Provide tools and other means to protect press operators
WAC 296-806-45538 455-22

Inspect and maintain presses
WAC 296-806-45540 455-23

Make sure presses and operating practices used in the PSDI (Presence Sensing Device Initiation) mode of operation meet these requirements
WAC 296-806-45542 455-24

Mills
WAC 296-806-460 460-1

Meet height requirements for mill rolls
WAC 296-806-46002 460-2

Provide mill safety controls
WAC 296-806-46004 460-3

Follow these stopping limit requirements for mills
WAC 296-806-46006 460-4

Press Brakes
WAC 296-806-465 465-1

General Requirements For Press Brakes

Provide auxiliary safety aids on press brakes
WAC 296-806-46502 465-3

Safeguard the point of operation on press brakes
WAC 296-806-46504 465-3

Chapter Contents

Safe Distance Safeguarding

Follow this requirement when using safe distance safeguarding
WAC 296-806-46506 465-4

Develop a safe distance safeguarding program for press brakes
WAC 296-806-46508 465-5

Follow these requirements for safe distance training for press brakes
WAC 296-806-46510 465-5

Require safe distance retraining for press brake operators
WAC 296-806-46512 465-6

Conduct periodic safe distance inspections on press brakes
WAC 296-806-46514 465-7

Supervise the safe distance program for press brakes
WAC 296-806-46516 465-8

Roll-forming and Bending Machines
WAC 296-806-470 470-1

Follow these requirements for machine initiation
WAC 296-806-47002 470-2

Safeguard nip points of roll-forming and bending machines
WAC 296-806-47004 470-2

Sanding Machines
WAC 296-806-475 475-1

Guard drum sanders
WAC 296-806-47502 475-3

Guard disk sanders
WAC 296-806-47504 475-3

Guard belt sanders
WAC 296-806-47506 475-4

Follow these requirements for feed roll guarding
WAC 296-806-47508. 475-4

Chapter Contents

Saws and Cutting Heads
WAC 296-806-480 480-1

GENERAL REQUIREMENTS FOR ALL SAWS AND CUTTING HEADS

Protect employees using saws and cutting heads
WAC 296-806-48002 480-7

Make sure saws and cutting heads are sharpened and tensioned by qualified people
WAC 296-806-48004 480-7

SAWS

General requirements for all saws

Make sure saws are safe to use
WAC 296-806-48006 480-8

Requirements for all circular saws

Make sure all circular saws meet these requirements
WAC 296-806-48008 480-9

Make sure circular saw gages meet these requirements
WAC 296-806-48010 480-9

Safeguard hand-fed circular table saws
WAC 296-806-48012 480-10

Provide kickback protection for employees using hand-fed circular table rip-saws when ripping wood products
WAC 296-806-48014 480-12

Safeguard self-feed circular saws
WAC 296-806-48016 480-14

Provide kickback protection for self-feed circular ripsaws when ripping wood products
WAC 296-806-48018 480-14

Guard circular resaws
WAC 296-806-48020 480-15

Machine Safety

WAC 296-806

Chapter Contents

Provide spreaders for circular resaws
WAC 296-806-48022 480-15

Requirements for Specific Circular Saws

Protect employees from automatic saw hazards
WAC 296-806-48024 480-16

Guard inverted swing (jump) saws
WAC 296-807-48026 480-16

Guard miter saws
WAC 296-806-48028 480-17

Guard radial saws
WAC 296-806-48030 480-19

Limit the travel of radial saws
WAC 296-806-48032 480-21

Provide kickback protection for radial saws when ripping wood products
WAC 296-806-48034 480-22

Guard revolving double arbor saws
WAC 296-806-48036 480-24

Guard swing saws
WAC 296-806-48038 480-24

Limit the travel of swing saws
WAC 296-806-48040 480-25

Requirements for Band Saws and Drag Saws

Make sure bandsaws meet these requirements
WAC 296-806-48042 480-27

Protect employees from drag saw hazards
WAC 296-806-48044 480-28

Chapter Contents

CUTTING HEADS

General Requirements for All Cutting Heads

Maintain and balance knives and cutting heads
WAC 296-806-48046 480-29

Boring and mortising machines

Make sure boring and mortising machines meet these requirements
WAC 296-806-48048 480-30

Chipper and Hog Mills

Follow these requirements for chipper mills
WAC 296-806-48050 480-31

Follow these requirements for hog mills
WAC 296-806-48052 480-32

Protect employees from falling into chipper and hog mills
WAC 296-806-48054 480-32

Jointers

Make sure jointers with horizontal cutting heads meet these requirements
WAC 296-806-48056 480-33

Guard horizontal cutting heads on hand-fed jointers
WAC 296-806-48058 480-33

Guard vertical cutting heads on jointers
WAC 296-806-48060 480-34

Molding, Sticking and Matching Machines

Make sure molding, sticking and matching machines meet these requirements
WAC 296-806-48062 480-34

Panel Raisers and Other Similar Machines

Guard hand-fed panel raisers and other similar machines
WAC 296-806-48064 480-35

Machine Safety

WAC 296-806

Chapter Contents

Planers

Make sure planers with a horizontal cutting head meet these requirements
WAC 296-806-48066 480-35

Guard planers
WAC 296-806-48068 480-36

Guard planer feed rolls
WAC 296-806-48070 480-36

Provide kickback protection on planers running stock of varied thickness
WAC 296-806-48072 480-37

Shapers

Make sure shapers meet these requirements
WAC 296-806-48074 480-38

Tenoning Machines

Guard tenoning machine feed chains and sprockets
WAC 296-806-48076 480-39

Guard tenoning machines
WAC 296-806-48078 480-39

Veneer Machinery

Guard veneer cutters and wringer knives
WAC 296-806-48080 480-40

Guard veneer clippers
WAC 296-806-48082 480-40

Follow these requirements for guarding guillotine cutters
WAC 296-806-48084 480-41

Provide mechanisms to stop power-driven guillotine cutters
WAC 296-806-48086 480-42

Prohibit riders on veneer slicer carriages
WAC 296-806-48088 480-42

Machine Safety

WAC 296-806

Chapter Contents

Sewing Machines
WAC 296-806-485 485-1

Guard sewing machine needles
WAC 296-806-48502 485-2

Definitions 500-1

Resources R-1

Index IN-1

Statutory Authority SA-1

Notes

How to Use this Chapter

IMPORTANT:

- All sections of this book don't apply to every workplace. See "Deciding Which Sections Apply to You" to identify the sections in this book that apply to your workplaces.
- See "How Rules Are Organized" to become familiar with how this chapter is organized.

DECIDING WHICH SECTIONS APPLY TO YOU:

- To decide which sections of this chapter to follow for the machines in your workplace, do either of the following:
  - Follow Steps 1 and 2
    or
  - Review the Chapter-at-a-Glance Table

Step 1: Review the section Requirements for All Machines, WACs 296-806-200 and 296-806-300, page 200-1. Make sure you address all of the requirements that apply to your machines.

Step 2: Review the section Additional Requirements for Some Machines and Machine Operations, WAC 296-806-400, to see if any of those sections apply to your machines.

Note:

➢ Whenever there's both a general requirement and a specific requirement for the same machine, follow the more specific requirement. For example, the following 2 requirements both apply to nip points from wheels and rails on mobile conveyers. Follow the second requirement, however, since it requires a specific safeguarding method (sweeps) for a specific nip point (wheels and rails on mobile conveyors).

- Safeguard Employees from Nip or Shear Point Hazards, WAC 296-806-20030, requires that you "Protect employees from hazards created by nip or shear points by using one or more safeguarding methods."
- Guard Wheels and Rails on Mobile Conveyors, WAC 296-806-42046, requires that you "Install sweeps in front of the nip points created by the wheels and rails to deflect objects that could derail the conveyor."

Machine Safety

WAC 296-806

How to Use this Chapter

Reference:

For requirements that apply to hand-held power tools, go to another chapter, Portable Power Tools, Chapter 296-807 WAC.

Chapter-at-a-Glance Table

Section	Applies To	Page
Requirements for All Machines	All machines in your workplace, organized into the following 4 categories:	
	General Requirements	200-1
	Safeguarding Requirements	200-10
	Safeguarding Methods	200-13
	Requirements for Specific Machine Hazards	300-1
Additional Requirements for Some Machines and Machine Operations:	Specific machines or operations	400-1
Abrasive Wheels	Machines that are not handheld and that use an abrasive wheel **Exemption:** This section does not apply to machines using: - Natural sandstone wheels - Pulpstone wheels - Coated abrasive products - Loose abrasives	405-1
Calenders	Hazards associated with calenders in the rubber and plastics industry where two or more metal rolls are set vertically and revolving in opposite directions.	410-1
Compactors	All stationary compactors in your workplace	415-1
Conveyors	All hazards related to conveyors and conveying systems, including bulk material, package, or unit handling types **Exemption:** This section does not apply to conveyor systems used primarily for moving employees.	420-1
Food Processing Equipment	All businesses that manufacture or process food, whether or not they are contained inside food stores **and** The design, installation, operation, and maintenance of machinery and equipment used in the food processing industry	425-1

-Continued-

Chapter-at-a-Glance Table (Continued)

Section	Applies To	Page
Forging Machines	Machines used in the forming of hot metal, such as hot trimming presses, forging hammers, hot forging presses, upsetters, hot bending and hot metal presses, and equipment used in boltheading and rivet making, as well as other forging equipment **Exemption:** This section does not apply to cold forging operations.	430-1
Garbage (Waste) Disposals	Hazards associated with garbage (waste) disposals found in the workplace	435-1
Glue Spreaders	Safeguarding and emergency controls used to protect employees from the hazards associated with cleaning and operating glue spreaders	440-1
Iron Workers	Hazards associated with hydraulic and mechanical ironworkers	445-1
Lathes	Hazards associated with metal and woodworking lathes	450-1
Mechanical Power Presses	Mechanically-powered machines, commonly referred to as mechanical power presses, that transmit force to cut, form, or assemble metal or other materials through tools or dies attached to or operated by slides **Exemption:** • This section, does not apply to: - Power press brakes - Hydraulic power presses - Pneumatic power presses - Slow-acting horizontal mechanical presses with large beds (bulldozers) - Hot bending and hot metal presses - Forging presses and hammers - Riveting machines - Cold headers and cold formers - Eyelet machines - High energyrate presses - Ironworkers and detail punches - Metal shears - Powdered metal presses - Press welders - Turret and plate punching machines - Wire termination machines - Welding presses	455-1

-Continued-

Machine Safety

WAC 296-806

How to Use this Chapter

Chapter-at-a-Glance Table (Continued)

Section	Applies To	Page
Mills	**Only** mills in the rubber and plastics industry that have in-running metal rolls that are set horizontally and run toward each other	460-1
Press Brakes	All machines classified as power press brakes. Power press brakes use a ram and bed to bend material	465-1
Roll-forming and Bending Machines	Power driven roll forming and bending machines that change the shape or the direction of materials by using rolls, rotary forming dies, and associated tooling	470-1
Sanding Machines	Sanding machines that remove material from stock with an abrasive sanding surface such as a belt, disk, or drum **Exemption:** • This section does not apply to hand-held sanders. See the Portable Power Tools book, chapter 296-807 WAC.	475-1
Saws and Cutting Heads	Fixed machines using saws or cutting heads that are used on any material	480-1
Sewing Machines	Hazards of needle injuries from domestic or light duty sewing machines	485-1
Definitions	Some of the terms in the rule that are defined for further clarification	500-1
Resources	Helpful tools	R-1
Index	Alphabetical index	IN-1
Statutory Authority	Order number, filing and effective dates	SA-1

How to Use this Chapter

How Rules are Organized

Ironworkers — Section Title
WAC 296-806-445 — Section WAC number

Summary

Key information

- In addition to the requirements in this section, you need to refer to the following sections of this chapter in order to fully protect your employees from machine hazards:
  - Requirements for All Machines, WAC 296-806-200 and WAC 296-806-300

This section applies to the hazards associated with hydraulic and mechanical ironworkers.

Purpose of Section

YOUR RESPONSIBILITY:

To protect employees from hazards associated with ironworkers

You must

Safeguard ironworkers point of operation
WAC 296-806-44502 445-2

Follow these requirements for adjustable restrictors when safeguarding ironworkers
WAC 296-806-44504 445-2

http://www.lni.wa.gov/

Machine Safety

WAC 296-806

How to Use this Chapter

How Rules are Organized (Continued)

Ironworkers

WAC 296-806-445

Rule

WAC 296-806-44502

Safeguard ironworkers point of operation

You must

Requirements

- Safeguard the different operating stations on ironworkers according to Requirements for All Machines, Safeguarding Methods, WAC 296-806-20042 through 296-806-20058.

Exemption:

- If the point of operation opening is one-fourth inch or less, safeguarding is not required

WAC 296-802-44504

Follow these requirements for adjustable restrictors when safeguarding ironworkers

You must

- Use adjustable restrictors for safeguarding only when guards, devices, or awareness barriers are not feasible.

How Rules are Organized (Continued)

Visual Aids

You'll come across key information in Machine Safety that's identified by icons. The following Chapter Icons Table shows the type of information you'll find when you see icons.

If you see this Icon	This is the type of information you'll find
	Provides additional useful information related to a requirement, but is not a requirement.
	Terms that are defined within the rule to better understand the requirements. There are also definitions at the end of the chapter.
	Optional aids to help you follow or understand the rule.
	Internet website addresses that may be of interest and assistance.
	Circumstances where the rule does not apply.
	Additional requirements that may apply and need to be considered.

Machine Safety

WAC 296-806

How to Use this Chapter

How Rules are Organized (Continued)

WAC Numbers

Washington Administrative Code (WAC) numbers are assigned to all Department of Labor and Industries (L&I) requirements. The following WAC Numbers Table describes the different types of numbers you'll see in this chapter.

WAC Numbers Table

If you see this type of WAC number	Your looking at
296-806	Chapter • 296 indicates L&I • 806 indicates the Machine Safety chapter
296-806-200	Section • 296 indicates L&I • 806 indicates the Machine Safety chapter • 200 is the number for the section called "Requirements for All Machines"
296-806-20036	Requirement • 296 indicates L&I • 806 indicates the Machine Safety chapter • 20036 is a specific requirement, "Safeguard employees from flying objects", in the 200 section

Scope

Machines and their moving parts create the potential for workplace injuries. Installed and used properly, safeguards can protect workers by helping to reduce or control machine hazards.

This chapter applies if you have machines or machine operations in your workplace. For requirements on hand-held tools go to Portable Power Tools, Chapter 296-807 WAC.

Notes

Requirements for All Machines

WAC 296-806-200 and WAC 296-806-300

Summary

This section applies to all machines in your workplace. It is organized into the following four catergories:

- General requirements.
- Safeguarding requirements.
- Safeguarding methods.
- Requirements for specific machine hazards.

Reference:

- In addition to the requirements in this section, you need to refer to the following sections of this chapter in order to determine is additional requirements are listed for machines or operations in your workplace:
  - Additional requirements for some machines and machine operations, WAC 296-806-400.
- For requirements that apply to hand-held tools, see Portable power tools, chapter 296-807 WAC.

Requirements for All Machines

YOUR RESPONSIBILITY:

To protect employees from machine hazards in your workplace

GENERAL REQUIREMENTS

You must

Workplace

Secure machines designed to stay in one place
WAC 296-806-20002 200-1

Protect employees from slipping hazards around machinery
WAC 296-806-20004 200-1

Arrange work areas to avoid creating hazards
WAC 296-806-20006 200-2

Requirements for All Machines

WAC 296-806-200 and WAC 296-806-300

Summary

Machine controls and operation

Make sure operating controls meet these requirements
WAC 296-806-20008 200-3

Protect employees from unintentional machine operation
WAC 296-806-20010 200-4

Make sure emergency stop controls meet these requirements
WAC 296-806-20012 200-4

Control machine vibration
WAC 296-806-20014 200-5

Prevent overspeed conditions
WAC 296-806-20016 200-5

Make sure hand feeding and retrieval tools meet these requirements
WAC 296-806-20018 200-6

Protect employees who are adjusting or repairing machinery
WAC 296-806-20020 200-7

Power transmission parts

Keep power transmission equipment in good working condition
WAC 296-806-20022 200-8

Inspect power transmission parts
WAC 296-806-20024 200-8

Protect employees lubricating moving machinery
WAC 296-806-20026 200-9

SAFEGUARDING REQUIREMENTS

Safeguard employees from the point of operation
WAC 296-806-20028 200-10

Safeguard employees from nip or shear point hazards
WAC 296-806-20030 200-10

Requirements for All Machines

WAC 296-806-200 and WAC 296-806-300

Summary

Safeguard employees from rotating or revolving parts
WAC 296-806-20032 200-11

Safeguard employees from reciprocating or other moving parts
WAC 296-806-20034 200-11

Safeguard employees from flying objects
WAC 296-806-20036 200-11

Safeguard employees from falling objects
WAC 296-806-20038 200-11

Safeguard employees from hazards created by moving surfaces with hazards such as sharp edges, burrs, and protruding nails and bolts
WAC 296-806-20040 200-12

SAFEGUARDING METHODS

Guards

Make sure guards meet these requirements
WAC 296-806-20042 200-13

Devices

Make sure devices meet these requirements
WAC 296-806-20044 200-16

Make sure light curtains meet these requirements
WAC 296-806-20046 200-17

Make sure pressure-sensitive mats meet these requirements
WAC 296-806-20048 200-18

Make sure restraint or pullback devices meet these requirements
WAC 296-806-20050 200-19

Make sure two-hand devices meet these requirements
WAC 296-806-20052 200-20

Requirements for All Machines

WAC 296-806-200 and WAC 296-806-300

Summary

Make sure devices used with barrier guards meet these requirements
WAC 296-806-20054 200-21

Distance

Make sure safeguarding by distance meets these requirements
WAC 296-806-20056 200-22

Make sure guardrails used for safeguarding meet these requirements
WAC 296-806-20058 200-25

REQUIREMENTS FOR SPECIFIC MACHINE HAZARDS

Fit arbors and mandrels to the machine
WAC 296-806-30002 300-1

Safeguard belt and rope drives
WAC 296-806-30004 300-2

Make sure belt or rope drives meet these requirements
WAC 296-806-30006 300-5

Protect employees while shifting belts on belt and pulley drives
WAC 296-806-30008 300-6

Make sure belt tighteners meet these requirements
WAC 296-806-30010 300-8

Safeguard cams, connecting rods, tail rods, and extension piston rods
WAC 296-806-30012 300-9

Safeguard chain and sprocket drives
WAC 296-806-30014 300-10

Requirements for All Machines

WAC 296-806-200 and WAC 296-806-300

Summary

Safeguard fan blades
WAC 296-806-30016 300-10

Safeguard flywheels
WAC 296-806-30018 300-12

Safeguard gears
WAC 296-806-30020 300-13

Safeguard projections on moving parts
WAC 296-806-30022 300-14

Safeguard pulleys
WAC 296-806-30024 300-15

Make sure pulleys meet these requirements
WAC 296-806-30026 300-16

Safeguard revolving drums, barrels, and containers
WAC 296-806-30028 300-16

Safeguard shafting
WAC 296-806-30030 300-17

Make sure shafting meets these requirements
WAC 296-806-30032 300-18

Safeguard unused keyways
WAC 296-806-30034 300-18

Make sure revolving collars meet these requirements
WAC 296-806-30036 300-19

Safeguard counterweights
WAC 296-806-30038 300-19

Notes

Requirements for All Machines

WAC 296-806-200 and WAC 296-806-300

Rule

GENERAL REQUIREMENTS

WAC 296-806-20002

Secure machines designed to stay in one place

You must

- Make sure machines designed to stay in one place are secured so they won't move or change position during use

Exemption:

- Machines that have either rubber feet or foot pads made of nonskid (high coefficient of friction) or similar vibration dampening materials don't have to be secured as long as the machine won't tip, fall over, or walk (move).

WAC 296-806-20004

Protect employees from slipping hazards around machinery

You must

- Make sure employees working around dangerous machines are protected from slipping on smooth, oily, or otherwise slippery floors by providing one of the following types of floor covering:
  - Nonslip matting
  - Grating
  - Nonslip composition flooring
  - Some other effective floor treatment

Reference:

➢ For additional requirements about housekeeping, personal protective equipment (PPE), and work practices, see the Safety and Health Core Rules, Chapter 296-800 WAC.

Rule

WAC 296-806-20006

Arrange work areas to avoid creating hazards

You must

- Make sure work areas around machinery are designed with enough space so each operator:
  - Can clean and handle material without interference from other workers or machines
  - Does **not** have to stand in the way of passing traffic
- Provide enough space so employees can bring in and remove materials safely

Reference:

➢ For requirements that apply to aisles and passageways, see WAC 296-24-73505.

WAC 296-806-20008

Make sure operating controls meet these requirements

Exemption:

- This rule doesn't apply to constant pressure controls used only for setup

You must

1) Make sure each machine has a control that both:
   - Stops the machine

     and
   - Can be reached by the operator without leaving the operator's position
2) Make sure the operator can easily reach all machine controls without reaching into a hazard area of the machine

Rule

WAC 296-806-20010

Protect employees from unintentional machine operation

You must

1) Make sure foot-operated controls are located or guarded so that unintentional movement to the “on” position is unlikely.
2) Make sure machines will **not** automatically restart when power is restored after a power failure, if restarting would create a hazard for employees.

Note:

➢ Operating controls can be protected from unintentional movement by methods such as covers on foot treadles and collars around machinery start buttons.

WAC 296-806-20012

Make sure emergency stop controls meet these requirements

You must

- Make sure emergency stop controls, if required, meet **all** the following:
  - Are red in color
  - Are easily reached from the operator’s normal work position
  - Are kept in a good working condition
  - Have to be manually reset before a machine can be restarted

WAC 296-806-20014
Control machine vibration

You must

- Prevent excessive machine vibration that could create a hazard to employees.

WAC 296-806-20016
Prevent overspeed conditions

You must

- Operate tools and equipment within their rated speed.

Note:

➢ Actions that could cause an overspeed condition include:
  - Installing a more powerful motor
  - Changing or increasing the power source
  - Changing attachment size or type, such as a blade or wheel
    - The attachment speed (rpm) and motor speed (rpm) should match

Rule

WAC 296-806-20018

Make sure hand feeding and retrieval tools meet these requirements

You must

- Make sure hand feeding and retrieval tools:
  - Are suitable for the work to be done
  - Don't create a hazard when used
  - Are of a size and shape that will keep the operator's hands outside the hazardous area
  - Are constructed so they won't shatter if they come in contact with the machine tool or tooling

Note:

➢ Hand feeding and retrieval tools, such as push sticks or push blocks, can **not** be used instead of required safeguarding, unless a specific machine requirement allows it.

WAC 296-806-20020

Protect employees who are adjusting or repairing machinery

Exemption:

- This rule doesn't apply if the machine has to be in motion to properly adjust it

You must

- Make sure power-driven machinery is completely stopped before **either**:
  - Making adjustments or repairs
    or
  - Removing material or refuse from the machine

Reference:

➢ For requirements about maintaining and servicing machinery where the unexpected start-up, energization, or release of stored energy could injure an employee are in Lockout/Tagout (Control of Hazardous Energy), Chapter 296-803 WAC.

Rule

WAC 296-806-20022

Keep power transmission equipment in good working condition

Definition:

A *power transmission part* is a mechanical component of a system that provides motion to a part of a machine or piece of equipment

You must

- Make sure power transmission parts are kept in good working condition at **all** times
- Keep bearings free from lost motion and well lubricated

WAC 296-806-20024

Inspect power transmission parts

You must

- Inspect power transmission parts **at least** once every 60 days to make sure that all:
  - Safeguarding meets the requirements of this chapter
  - Parts are in proper alignment
  - Bolts and screws that hold power transmission parts together or support the system are tight

WAC 296-806-20026

Protect employees lubricating moving machinery

You must

1) Protect employees who lubricate moving machinery by:
   - Providing tools, such as oil cans or grease guns, that have spouts or necks that are long enough to keep the employees' hands out of hazardous areas
   - Requiring employees to wear closely fitted clothing

Note:

➢ Things such as clothing, hair, and jewelry can get caught in machinery and be a hazard on the job.

You must

2) Make sure drip cups and pans are securely fastened to the machinery

Rule

SAFEGUARDING REQUIREMENTS

WAC 296-806-20028
Safeguard employees from the point of operation

IMPORTANT:

- If a specific safeguarding method in this chapter is required for machinery or machine parts found in your workplace, follow the specific requirement.
- In the absence of a specific safeguarding method required by this or some other chapter, you need to choose a method or combination of methods from the safeguarding requirements found in Safeguarding Methods, WAC 296-806-20042 through 296-806-20058. Examples of safeguarding methods include:
  - Guards
  - Devices
  - Safeguarding by distance
  - Safeguarding by location

You must

- Protect employees from hazards created by the point of operation by using one or more safeguarding methods.

WAC 296-806-20030
Safeguard employees from nip or shear point hazards

You must

- Protect employees from hazards created by nip or shear points by using one or more safeguarding methods.

WAC 296-806-20032

Safeguard employees from rotating or revolving parts

You must

- Protect employees from hazards created by rotating or revolving parts by using one or more safeguarding methods.

WAC 296-806-20034

Safeguard employees from reciprocating or other moving parts

You must

- Protect employees from hazards created by reciprocating or other moving parts by using one or more safeguarding methods.

WAC 296-806-20036

Safeguard employees from flying objects

You must

- Protect employees from hazards created by flying objects, including chips, sparks, and fluids by using one or more safeguarding methods.

WAC 296-806-20038

Safeguard employees from falling objects

You must

- Protect employees from hazards created by falling objects by using one or more safeguarding methods.

Rule

WAC 296-806-20040

Safeguard employees from moving surfaces with hazards

You must

- Safeguard employees from hazards created by moving surfaces with hazards such as sharp edges, burrs, and protruding nails and bolts.

SAFEGUARDING METHODS

WAC 296-806-20042

Make sure guards meet these requirements

You must

- Make sure guards do **not** create additional hazards such as sharp edges or pinch points between the guard and moving machine parts.
- Make sure guards are:
  - Made of durable materials
  - Strong enough to withstand the forces to which they are exposed
  - Securely fastened to the machine, if possible, or to the building structure if they cannot be attached to the machine
- Make sure guards protect employees by doing **both** of the following:
  - Preventing hands or other body parts from reaching through, over, under, or around the guard into the hazard area
    and
  - Preventing objects or debris from falling onto or being thrown towards an employee.
- Make sure barrier guards:
  - Are properly installed, adjusted, and maintained
  - Have no opening at any point larger than shown in Table 200-1, Largest Allowable Guard Opening

-Continued-

WAC 296-806-20042 (Continued)

Reference:

- Metal cutting shears are allowed to be guarded with properly applied awareness barrier safeguarding as described in ANSI B11.4-1993, Sections 6.3.3.

Table 200-1

Largest Allowable Guard Opening (inches)

If the distance (A) from hazard to the guard is	Then the opening (B) in the guard or between the table and the guard can NOT be greater than
½ to 1 ½	¼
1 ½ to 2 ½	⅜
2 ½ to 3 ½	½
3 ½ to 5 ½	⅝
5 ½ to 6 ½	¾
6 ½ to 7 ½	⅞
7 ½ to 12 ½	1 ¼
12 ½ to 15 ½	1 ½
15 ½ to 17 ½	1 ⅞
17 ½ to 31 ½	2 ⅛
Over 31 ½	6

WAC 296-806-20042 (Continued)

This diagram illustrates the information found in Table 200-1. The size of the opening in the guard, or between the bottom edge of the guard and the feed table is small enough to prevent any part of the operator's body from reaching the hazardous area.

Illustration 200-1

DISTANCE FROM HAZARD TO GUARD (A)

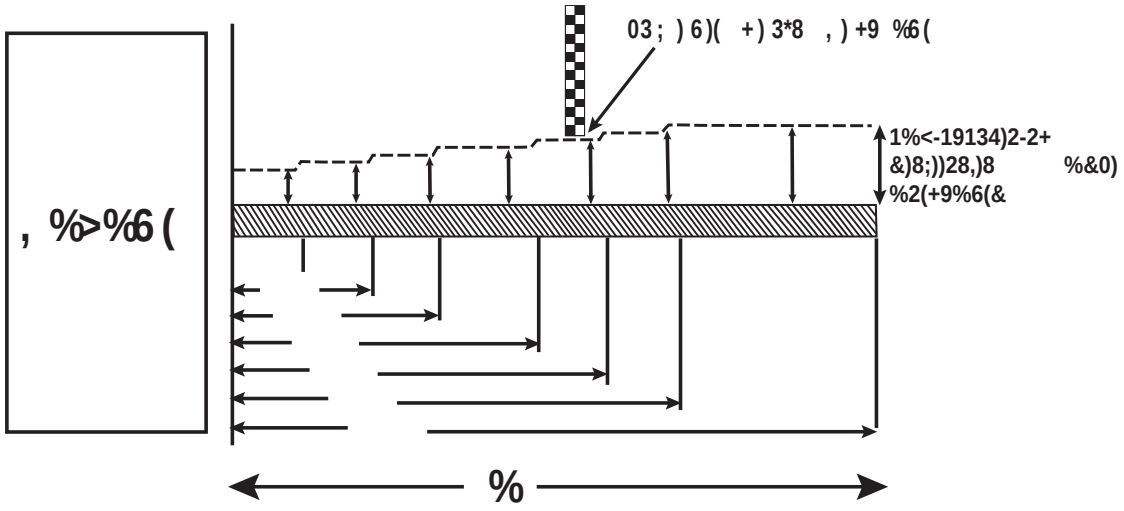

Rule

WAC 296-806-20044

Make sure devices meet these requirements

You must

- Make sure devices used to safeguard employees do either of the following:
  - Stop the motion of a moving part before an employee comes in contact with it and has to be manually reset before machines can be restarted
    or
  - Be designed and constructed to prevent the operator from having any part of their body in the danger zone during the hazardous part of the operating cycle.

Reference:

➢ For more information on installation of safety devices, see Performance Criteria for Safeguarding, ANSI B11.19-2003.

WAC 296-806-20046

Make sure light curtains meet these requirements

IMPORTANT:

All devices must meet the general requirements for devices found in *Make sure devices meet these requirements*, WAC 296-806-20044.

You must

- Make sure light curtains, when used:
  - Respond to the presence of an operator's hand, other body part, or a work piece
  - Have indicators that are easily seen by the operator showing when the device is functioning or has been bypassed.

Note:

➢ Even if a shiny reflective object or work piece is used with a light curtain or other electro-optical device, it should still respond to the operator's hand or other body part

You must

- Make sure only authorized persons can make the following adjustments to light curtains:
  - Variations in operating conditions
  - Fixed or channel blanking
  - Floating blanking (sometimes referred to as floating channel or floating window features)
- Safeguard access to the point of operation that is **not** protected by light curtains.

Reference:

➢ For more information on light curtains and their requirements, see Performance Criteria for Safeguarding, ANSI B11.19-2003.

Rule

WAC 296-806-20048

Make sure pressure-sensitive mats meet these requirements

IMPORTANT:

All devices must meet the general requirements for devices found in *Make sure devices meet these requirements*, WAC 296-806-20044.

You must

- Make sure pressure-sensitive mats:
  - Detect the presence or absence of the operator or others
  - Send the stop command and prevent successive machine cycles if any single component fails
  - Are connected with the machine control system so the device's stop signal immediately stops action of the machine tool and requires use of the start control before the machine can begin another cycle
  - Are located so that the operator can **not** reach the recognized hazard before hazardous motion has stopped
  - Have an indicator easily seen by the operator that shows the mat is operating.

WAC 296-806-20050

Make sure restraint or pullback devices meet these requirements

IMPORTANT:

All devices must meet the general requirements for devices found in *Make sure devices meet these requirements*, WAC 296-806-20044.

You must

- Make sure restraint or pullback devices:
  - Prevent the operator from reaching into the point of operation or withdraw the operator's hands from the point of operation before motion of the machine creates a hazard
  - Have fasteners, pins, and other items used to secure and maintain the setting of the device applied in a way that minimizes loosening, slipping, or failure during use
  - Are worn inside gloves, if used, so if a glove becomes trapped inside a machine or tool, the device can still remove the operator's hand from the hazard area.

Rule

WAC 296-806-20052

Make sure two-hand devices meet these requirements

IMPORTANT:

All devices must meet the general requirements for devices found in *Make sure devices meet these requirements*, WAC 296-806-20044.

You must

- Make sure two-hand devices:
  - Protect each hand device against accidental operation
  - Require simultaneous operation of both hand devices to begin the cycle, including the first cycle (automatic mode)
  - Are provided with an anti-repeat feature when used in single cycle mode
  - Have a set of devices for each operator if more than one needs to be safeguarded
  - Are located far enough from the nearest hazard so the operator can **not** reach the hazard before hazardous motion stops.

Reference:

➢ For more information on proper installation of safety devices, see Performance Criteria for Safeguarding, ANSI B11.19-2003.

WAC 296-806-20054

Make sure devices used with barrier guards meet these requirements

IMPORTANT:

All devices must meet the general requirements for devices found in *Make sure devices meet these requirements*, WAC 296-806-20044.

You must

- Make sure movable barrier devices:
  - Return to the open position if they encounter an obstruction while enclosing the hazardous area
  - Are designed so the operator or others cannot reach the hazard by reaching over, under, around or through the device when it is in the closed position.
- Make sure interlocks used with barrier guards do **all** of the following:
  - Stop hazardous motion of machines when interlocks are open
  - Are **not** easily bypassed
  - Are designed and installed so that closing the interlocks won't cause a hazard to employees.

Rule

WAC 296-806-20056

Make sure safeguarding by distance meets these requirements

You must

- Make sure means used to safeguard by distance do both of the following:
  - Prevent parts or material from falling on employees below
    and
  - Separate employees on fixed ladders, stairs, floors, or other walking or working surfaces from the hazard by:
    - More than 7 feet vertically
      or
    - A horizontal distance that prevents employees from contacting or being injured by the hazard according to the distances in Table 200-2.

-Continued-

WAC 296-806-20056 (Continued)

Table 200-2 helps you identify either the required horizontal distance from the hazard to the barricade (B), or the required height of the barricade (C), as long as you know A and either variable, B or C.

Table 200-2

Safe Distances for Fixed Barricades (B)

Height of the Barricade (C)

Height of the Hazard (A)	96	86	78	71	63	55	48	40
96	0	4	4	4	4	4	4	4
86		10	14	16	20	20	24	24
78			14	20	24	28	36	43
71				24	36	36	40	43
63				20	36	36	40	51
55				4	32	36	40	51
48					20	36	40	55
40					12	36	40	55
32						24	36	51
24							20	48
16							12	48
8							8	43

Note:

- The height and distance requirements of Table 200-2 are designed to safeguard workers from a fixed hazard. If a hazard involves flying chips, fluids, parts or materials, the barrier height, distance, and construction may need to be adjusted to provide adequate protection.

-Continued-

Rule

WAC 296-806-20056 (Continued)

Illustration 200-2
HOW TO MEASURE VARIABLES FOR TABLE 200-2

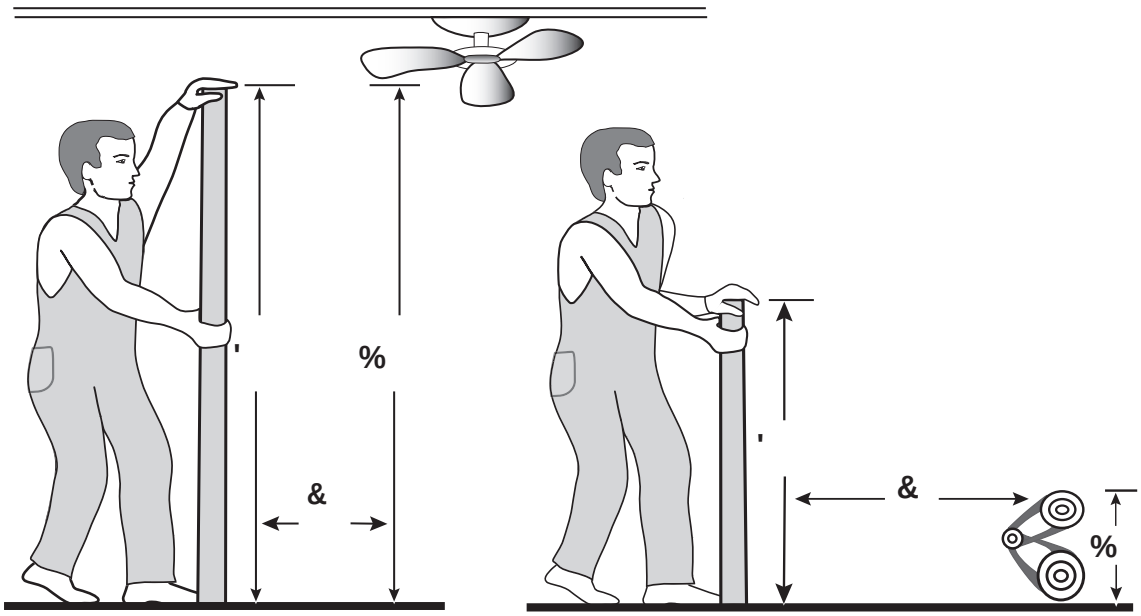

Examples:

- If the height of the hazard (A) is 78 inches, and the horizontal distance from the hazard to the barricade (B) is 14 inches, the required height of the barricade (C) is 78 inches.
- If the height of the hazard (A) is 86 inches, and the height of the barricade (C) is 55 inches, then the required horizontal distance from the hazard to the barricade (B) is 20 inches.

WAC 296-806-20058

Make sure guardrails used for safeguarding meet these requirements

Note:

- Guardrails may be used to safeguard:
  - Flywheels
  - Cranks and connecting rods
  - Tail rods and extension piston rods
  - Horizontal belts in a power generating room
  - Clutches, cutoff couplings, or clutch pulleys in an engine room occupied only by an attendant
  - Power transmission parts on a runway used only for oiling, maintenance, running adjustment, or repair work.

You must

- Make sure top rails are:
  - Smooth-surfaced
  - Strong enough to withstand a force of at least 200 pounds
  - Between 39 and 45 inches above the floor, platform, runway, or ramp
- Make sure guardrails have an intermediate rail (midrail) installed approximately halfway between the top rail and the floor, platform, runway, or ramp
- Make sure rails don't extend beyond the end posts of the guardrail and create a projection hazard
- Make sure toe boards, if required by this chapter to safeguard a machinery hazard, are:
  - At least 4 inches high
  - Securely fastened in place with no more than 1/4 inch between the bottom of the toe board and the floor, platform, runway, or ramp
  - Made of substantial material that's either solid or that has openings in the material no larger than one inch.

Notes

REQUIREMENTS FOR SPECIFIC MACHINE HAZARDS

WAC 296-806-30002

Fit arbors and mandrels to the machine

You must

- Make sure that arbors and mandrels:
  - Have firm and secure bearing
  - Are free from play
- Only place or mount attachments on a machine arbor that have been accurately machined to the correct size and shape.

Rule

WAC 296-806-30004

Safeguard belt and rope drives

Exemption:

- You don't need to safeguard the following types of belts when they're operating at 250 linear feet per minute or less:
  - Flat belts that are:
    - One inch wide or less
    - Two inches wide or less and have no metal lacings or fasteners
  - Round belts ½ inch or less in diameter
  - Single-strand v-belts 13/32 inch wide or less
- You don't need to safeguard belts that are in a room, vault, or similar space that contains only power transmission parts or equipment if the space:
  - Is controlled by lock and key or has similarly restricted access that allows only authorized persons to enter
  - Is well lit
  - Has a dry, level, and firm floor
  - Has a well-marked route with a vertical clearance of at least 5 feet 6 inches for authorized employees to follow to perform their duties
- You don't need to safeguard belt drives of light or medium duty sewing machines if **all** of the following apply:
  - It uses either a flat or a round belt without metal lacings and fasteners
  - The belt is located above the table top
  - The table top is designed so that employees near the machine aren't exposed to motion hazards while they work or as they pass by
  - The machine isn't used to sew heavy materials such as leather, canvas, denim, or vinyl
  - The operators' hands are not in, near, or on the wheel, nip point, belt area, or other motion hazard when the machine is operating

-Continued-

WAC 296-806-30004 (Continued)

Reference:

- You may need to follow additional requirements for sewing machines. See Sewing Machines, WAC 296-806-485, later in this chapter for more information.

You must

- Safeguard belt or rope drives that are 7 feet or less above the floor or working surface.

Reference:

- In the absence of a specific safeguarding method, follow the safeguarding requirements found in Safeguarding Methods, WAC 296-806-20042 through 296-806-20058. Examples of safeguarding methods include:
  - Guards
  - Devices
  - Safeguarding by distance
  - Safeguarding by location

Note:

- You may use a nip point and pulley guard on a vertical or inclined belt if it meets **all** of the following requirements:
  - 2 ½ inches wide or less
  - Running at a speed of less than 1,000 feet per minute
  - Free from metal lacings or fastenings

-Continued-

Rule

WAC 296-806-30004 (Continued)

You must

- Safeguard overhead belts located more than 7 feet above the floor or working surface **if any of the following** apply:
  - The belt is located over a passageway or work space and travels at a speed of 1800 feet per minute or more
  - The distance between the centers of its pulleys is 10 feet or more
  - The belt is wider than 8 inches.
- Safeguard the space between the upper and lower runs of a horizontal belt if there's enough room for an employee to pass between them by providing both:
  - A guard along the upper run to keep the belt from contacting the worker or anything they may be carrying
    and
  - A platform over the lower run that has a railing that's completely filled in with wire mesh or other filler or by a solid barrier.

Note:

➢ The passage between the 2 belts is considered safeguarded if you completely block it with a guardrail or other barrier.

Exemption:

- In a power generating room, only the lower run of a horizontal belt has to be safeguarded.

WAC 296-806-30006

Make sure belt or rope drives meet these requirements

You must

1) Use an idler when your machine uses a quarter-twist belt that can run in either direction.
2) Make sure, when it is necessary to apply dressing to moving belts or ropes, that you apply the dressing at a point where the belts or ropes leave the pulley.
3) Make sure that a belt shifted by hand is **not** fastened with metal or other material that creates a hazard.
4) Make sure a bearing support that's next to a friction clutch or cutoff coupling has self-lubricating bearings that don't need frequent attention.
5) Use a substantial belt perch, such as a bracket or roller, when it isn't practical to use a loose pulley or idler to keep idle belts away from shafts.

Rule

WAC 296-806-30008

Protect employees while shifting belts on belt and pulley drives

Exemption:

- A belt shifter isn't required on a belt and pulley system if:
  - It was installed on or before August 17, 1971
    or
  - The belt and pulley drive meets **all** of these requirements:
    - The belt is endless or laced with rawhide
    - A nip point guard in front of the cone safeguards the nip point of the belt and pulley
    - The nip point guard extends at least to the top of the largest step of the cone and is formed to show the contour of the cone

Definition:

A *nip point belt and pulley guard* is a guard that encloses the pulley and has rounded or rolled edge slots for the belt to pass through.

You must

1) Provide a permanent mechanical belt shifter on belt drives that use either:
   - Tight and loose (drive and idler) pulleys
     or
   - A cone pulley.
2) Protect employees from the nip point of the belt and pulley by either:
   - The belt shifter or clutch handle
     or
   - A vertical guard in front of the pulley that extends at least to the top of the largest step of the cone.

-Continued-

WAC 296-806-30008 (Continued)

You must

3) Make sure a belt shifter or clutch handle is:
   - Rounded to keep the operator from being injured
   - Easy to reach
   - Positioned to reduce the chance of being accidentally moved
   - Located either:
     - Over the machine
       or
     - Not higher than 6 feet 6 inches above the floor.
4) Make sure each belt shifter or clutch handle of the same type in your workplace moves in the same direction to stop a machine, that is, either all right or all left.

Exemption:

- A friction clutch handle on a countershaft carrying 2 clutch pulleys with open and crossed belts isn't required to move in the same direction as all other clutch handles or belt shifters if:
  - The clutch handle has 3 positions
    and
  - The machine is at rest when the clutch handle is in the center position.

-Continued-

Rule

WAC 296-806-30008 (Continued)

You must

5) Use a belt shifter to shift a belt on and off a fixed pulley.
   - When a belt shifter can't be used, you may use a belt pole if it's both:
     - Smooth
       and
     - Large enough to grasp securely

Note:

➢ A belt pole is also known as a “belt shipper” or “shipper pole.”

You must

6) Provide a locking-type belt shifter or other positive securing device on woodworking machines driven by belts and shafting.

WAC 296-806-30010

Make sure belt tighteners meet these requirements

You must

- Make sure belt tighteners:
  - Are substantially constructed and securely fastened
  - Have bearings that are securely capped
  - Have a mechanism to prevent them from falling
- Make sure belt tighteners used to activate machinery are securely held in the “off” position by either:
  - Gravity
    or
  - An automatic mechanism that must be released by hand

WAC 296-806-30012

Safeguard cams, connecting rods, tail rods, and extension piston rods

You must

- Safeguard cams, connecting rods, tail rods, or extension piston rods that could be contacted by employees.

Reference:

➢ In the absence of a specific safeguarding method, follow the safeguarding requirements found in Safeguarding Methods, WAC 296-806-20042 through 296-806-20058. Examples of safeguarding methods include:
  - Guards
  - Devices
  - Safeguarding by distance
  - Safeguarding by location

You must

- Make sure guardrails used to safeguard the side or ends of rods are at least 15 inches away from the rod when it's fully extended.

Rule

WAC 296-806-30014

Safeguard chain and sprocket drives

Exemption:

- This section doesn't apply to hand-operated sprockets.

You must

- Enclose chains and sprocket wheels that are 7 feet or less above the floor or working surface.
- Make sure chain and sprocket drive enclosures that extend over machine or other working areas protect workers from falling drive parts.

WAC 296-806-30016

Safeguard fan blades

Reference:

➢ In the absence of a specific safeguarding method, follow the safeguarding requirements found in Safeguarding Methods, WAC 296-806-20042 through 296-806-20058. Examples of safeguarding methods include:

- Guards
- Devices
- Safeguarding by distance
- Safeguarding by location

-Continued-

WAC 296-806-30016 (Continued)

Exemption:

- A fan is considered guarded if it meets all of the following requirements:
  - It's in a basement, tower, or room locked against unauthorized entrance.
  - The vertical clearance in passageways between the floor and power transmission beams, ceiling, or any other objects, isn't less than 5 feet 6 inches.
  - The intensity of illumination must be a minimum of 10 foot candles when the area is occupied.
  - The footing is dry, firm, and level.
  - The route followed by the oiler or authorized personnel is protected in such a manner as to prevent accident.
  - The periphery of the fan blade is covered by a shroud.

You must

- Protect employees from exposure to the blades of any fan less than 7 feet above the floor or working surface.
- Prevent rods, pipes, or other material being handled by workers, from contacting moving fan blades.

Reference:

➢ For guard opening requirements, see Table 200-1, Largest Allowable Guard Opening, in Make sure guards meet these requirements, WAC 296-806-20042.

Rule

WAC 296-806-30018

Safeguard flywheels

You must

- Safeguard flywheels that have any part of the wheel 7 feet or less above the floor or working surface with either:
  - An enclosure

    or
  - A guardrail, at least 15 inches but no more than 20 inches from the rim
- Make sure enclosures that safeguard flywheels located above a working area are strong enough to hold the weight of the wheel, if a shaft or wheel mounting fails.
- Provide a toeboard on guardrails used to safeguard flywheels that have any part of the wheel within 12 inches of the floor or working surface.
- Do both of the following to safeguard spoked flywheels that are 5 feet or less in diameter with smooth rims, when enclosures or guardrails can't be used:
  - Cover the spokes on the exposed side of the wheel with a disk guard that creates a smooth surface and edge

    and
  - Remove or cover keys or other dangerous projections on the wheel that aren't covered by the disk guard

Exemption:

- You may leave an open space of 4 inches or less between the outside edge of the disk guard and the rim of the spoked flywheel to make it easier to turn the wheel over.
- You may use an adjustable guard for the flywheel of a gasoline or diesel engine for starting the engine or for making running adjustments. A slot opening for a jack bar is permitted.

WAC 296-806-30020

Safeguard gears

You must

- Safeguard gears that are 7 feet or less above the floor or working surface.

Reference:

➢ In the absence of a specific safeguarding method, follow the safeguarding requirements found in Safeguarding Methods, WAC 296-806-20042 through 296-806-20058. Examples of safeguarding methods include:
  - Guards
  - Devices
  - Safeguarding by distance
  - Safeguarding by location

Exemption:

- You don't need to guard hand-operated gears that are used only to adjust machine parts that stop when the gears aren't being turned by hand.

Rule

WAC 296-806-30022

Safeguard projections on moving parts

You must

- Safeguard projections on moving parts such as keys, setscrews, bolts, and nuts, by:
  - Removing them
  - Making them flush
  - Guarding with metal covers

Exemption:

- This requirement doesn't apply to keys or setscrews that are:
  - Within an enclosure
  - Below the plane of the rim of a pulley that's less than 20 inches in diameter
  - Located where employee contact isn't possible

WAC 296-806-30024

Safeguard pulleys

You must

- Safeguard pulleys that have any part of the pulley 7 feet or less above the floor or working surface.

Exemption:

- You don't need to safeguard pulleys that are in a room, vault, or similar space that contain only power transmission parts or equipment if the space:
  - Is controlled by lock and key or has similarly restricted access that allows only authorized persons to enter
  - Is well lit
  - Has a dry, level, and firm floor
  - Has a well-marked route with a vertical clearance of at least 5 feet, 6 inches for authorized employees to follow to perform their duties

Reference:

➢ In the absence of a specific safeguarding method, follow the safeguarding requirements found in Safeguarding Methods, WAC 296-806-20042 through 296-806-20058. Examples of safeguarding methods include:
  - Guards
  - Devices
  - Safeguarding by distance
  - Safeguarding by location

Rule

WAC 296-806-30026

Make sure pulleys meet these requirements

You must

1) Make sure pulleys are designed and balanced for the speed at which they operate.
2) Make sure **not** to use pulleys that are cracked or have a piece broken out of the rim.

WAC 296-806-30028

Safeguard revolving drums, barrels, and containers

You must

- Safeguard revolving drums, barrels, or containers by an enclosure that's interlocked with the drive mechanism so that they can't revolve unless the enclosure is in place.

WAC 296-806-30030

Safeguard shafting

Exemption:

- You don't need to safeguard shafting that's in a room, vault, or similar space that contains only power transmission parts or equipment if the space:
  - Is controlled by lock and key or has similarly restricted access that allows only authorized persons to enter
  - Is well lit
  - Has a dry, level, and firm floor
  - Has a well-marked route with a vertical clearance of at least 5 feet 6 inches for authorized employees to follow to perform their duties

You must

- Enclose shafting that is 7 feet or less above the floor or working surface.
- Make sure projecting shaft ends either:
  - Have a smooth edge, smooth end, and project no more than ½ the diameter of the shaft
    or
  - Are guarded by a non-rotating cap or safety sleeve
- Safeguard shafting under a bench or table by enclosing it in a stationary casing or by using a trough with sides that both:
  - Cover the shafting to within 6 inches of the bottom of the table or to within 6 inches of the floor or working surface, whichever is appropriate
    and
  - Extend 2 inches beyond the end of the shafting.

Rule

WAC 296-806-30032

Make sure shafting meets these requirements

You must

1) Keep shafting free of:
   - Excessive oil or grease
   - Rust or pitting from corrosion
2) Secure shafting against excessive endwise movement.

WAC 296-806-30034

Safeguard unused keyways

You must

- Fill, cover, or otherwise safeguard all unused keyways.

Reference:

➢ In the absence of a specific safeguarding method, follow the safeguarding requirements found in Safeguarding Methods, WAC 296-806-20042 through 296-806-20058. Examples of safeguarding methods include:
   - Guards
   - Devices
   - Safeguarding by distance
   - Safeguarding by location

WAC 296-806-30036

Make sure revolving collars meet these requirements

You must

- Make sure revolving collars are cylindrical.
- Make sure screws or bolts used in the collar do **not** project beyond the outside of the collar.

WAC 296-806-30038

Safeguard counterweights

You must

- Provide safeguarding for all counterweights where employees are exposed to contact.

Reference:

➢ In the absence of a specific safeguarding method, follow the safeguarding requirements found in Safeguarding Methods, WAC 296-806-20042 through 296-806-20058. Examples of safeguarding methods include:
  - Guards
  - Devices
  - Safeguarding by distance
  - Safeguarding by location

Notes

Additional Requirements for Some Machines and Machine Operations

WAC 296-806-400

Summary

- If your specific machine or operation isn't listed here, then follow the "Requirements for All Machines" found in this chapter, WAC 296-806-200 and WAC 296-806-300.

YOUR RESPONSIBILITY:

To protect employees from hazards associated with specific machines and their operations in your workplace

You must

Abrasive Wheels and Machines
WAC 296-806-405 405-1

Calenders
WAC 296-806-410 410-1

Compactors
WAC 296-806-415 415-1

Conveyors
WAC 296-806-420 420-1

Food Processing Equipment
WAC 296-806-425 425-1

Forging Machines
WAC 296-806-430 430-1

Garbage (Waste) Disposals
WAC 296-806-435 435-1

Glue Spreaders
WAC 296-806-440 440-1

Additional Requirements for Some Machines and Machine Operations

WAC 296-806-400

Summary

Ironworkers
WAC 296-806-445 445-1

Lathes
WAC 296-806-450 450-1

Mechanical Power Presses
WAC 296-806-455 455-1

Mills
WAC 296-806-460 460-1

Press Brakes
WAC 296-806-465 465-1

Roll-forming and Bending Machines
WAC 296-806-470 470-1

Sanding Machines
WAC 296-806-475 475-1

Saws and Cutting Heads
WAC 296-806-480 480-1

Sewing Machines
WAC 296-806-485 485-1

Abrasive Wheels and Machines

WAC 296-806-405

Summary

- In addition to the requirements in this section, you need to refer to the following sections of this chapter in order to fully protect your employees from machine hazards:
  - Requirements for All Machines, WAC 296-806-200 and WAC 296-806-300
- You need to refer to Portable Power Tools, Chapter 296-807 WAC, for requirements relating to hand-held abrasive wheel tools.

This section applies to machines that aren't hand-held and that use an abrasive wheel.

Definition:

An *abrasive wheel* is a grinding tool consisting of bonded abrasive grains. This includes diamond and reinforced wheels.

Helpful tool:

Abrasive Wheels Illustrations

You can find illustrations of various types of abrasive wheels in the Resources section of this chapter.

Abrasive Wheels and Machines

WAC 296-806-405

Summary

YOUR RESPONSIBILTY:

To make sure abrasive wheel machines and wheels are safe to use

You must

General Requirements for Abrasive Wheels

Make sure abrasive wheels and machines are properly designed and constructed
WAC 296-806-40502 405-5

Make sure machines have safety guards
WAC 296-806-40504 405-6

Make sure safety guards meet specific requirements
WAC 296-806-40506 405-7

Provide a tongue guard on bench, pedestal, floorstand, and cylindrical grinders
WAC 296-806-40508 405-9

Use a work rest for off-hand grinding
WAC 296-806-40510 405-10

Mounting Abrasive Wheels

Make sure abrasive wheels are safe to use
WAC 296-806-40512 405-11

Mount wheels properly
WAC 296-806-40514 405-12

Use proper flanges
WAC 296-806-40516 405-13

Make sure flanges are in good condition
WAC 296-806-40518 405-14

Summary

Use specific flanges for Type 1 cutting-off wheels
WAC 296-806-40520 405-15

Use specific flanges for Type 27A cutting-off wheels
WAC 296-806-40522 405-15

Use blotters when required
WAC 296-806-40524 405-16

Meet specific blotter requirements when using modified Types 6 and 11 wheels (terrazzo)
WAC 296-806-40526 405-16

Notes

WAC 296-806-40502

Make sure abrasive wheels and machines are properly designed and constructed

You must

- Make sure abrasive wheels and machines, including safety guards and flanges, manufactured on or after January 1, 2005, meet the design and construction requirements of American National Standards Institute (ANSI) B7.1-2000, Safety Requirements for the Use, Care and Protection of Abrasive Wheels.
- Make sure abrasive wheels and machines, including safety guards and flanges, manufactured before January 1, 2005 meet the design and construction requirements of American National Standards Institute (ANSI) B7.1-1970, Safety Code for the Use, Care and Protection of Abrasive Wheels.

Note:

➢ There may be a statement on the machine or in the instruction manual that the machine meets the appropriate ANSI standard. If in doubt, check with the manufacturer.

Abrasive Wheels and Machines

WAC 296-806-405

Rule

WAC 296-806-40504

Make sure machines have safety guards

You must

- Use abrasive wheels only on machines that have safety guards.
- Make sure the safety guard:
  - Is mounted so it maintains proper alignment with the wheel
  - Is mounted with fasteners strong enough to keep the guard in position if a wheel breaks
  - Covers the spindle end, nut, and flange projections.

Exemption:

- Safety guards aren't required on machines that use:
  - Wheels for internal grinding while advancing, retracting or within the work
  - Types 16, 17, 18, 18R, and 19 cones and plugs and threaded hole pot balls where either:
    - The work offers protection
      or
    - The size doesn't exceed 3 inches in diameter by 5 inches long
  - Notched, segmented, or continuous rim metal centered diamond lapidary wheels that are:
    - Used with a coolant deflector
      and
    - Operated at 3,500 SFPM or less
  - Type 1 reinforced wheels that are:
    - 3 inches or less in diameter
    - 1/4 inch or less thick
    - Operating at peripheral speeds of 9,500 SFPM or less
    - Used by operators wearing safety glasses and face shields
    - Valve seating grinding wheels
    - Remotely operated machines in an enclosure that will retain the pieces of a broken wheel

WAC 296-806-40506

Make sure safety guards meet specific requirements

You must

- Make sure the machine safety guards meet the requirements of Table 405-1, Guard Requirements.

Definition:

Maximum exposure angle is the largest part of a wheel that does not need to be covered by a safety guard.

Note:

- The maximum exposure angle is measured by lines starting at the center of the spindle and extending to the ends of the guard at the wheel periphery.
- Visors and other accessory equipment are used in determining the size of the guard opening only if they're at least as strong as the safety guard.

-Continue-

Rule

WAC 296-806-40506 (Continued)

Table 405-1
Guard Requirements

Machine	Maximum exposure angle and other guard restrictions
Bench, pedestal, or floorstand grinders	• Not higher than 65 degrees above the horizontal centerline of the wheel • ¼ (90 degrees) of the wheel for grinding done at or above the horizontal centerline of the wheel • 125 degrees if the work has to contact the wheel below the horizontal centerline of the wheel
Cylindrical grinders	• ½ (180 degrees) of the wheel • Not higher than 65 degrees above the horizontal centerline of the wheel
Surface grinders	• 150 degrees of the wheel • Not higher than 15 degrees below the horizontal
Cutting-off machines	• ½ (180 degrees) of the wheel
Swing frame grinders	• ½ (180 degrees) of the wheel • Encloses the top ½ of the wheel
Swing frame grinders using cup wheels	• ½ (180 degrees) of the wheel • Covers the wheel on the side towards the operator
Semiautomatic snagging machines	• ½ (180 degrees) of the wheel • Covers the wheel on the side towards the operator
Machines used for top grinding	• As small as possible up to $^1/_6$ (60 degrees) of the wheel

WAC 296-806-40508

Provide a tongue guard on bench, pedestal, floorstand, and cylindrical grinders

You must

- Make sure, if the operator stands in front of the opening in the safety guard, that the safety guard (tongue guard) at the top of the opening is adjusted to within ¼ inch of the wheel.

Definition:

The *tongue guard* is an integral part of a safety guard that's located where the upper exposed part of the abrasive wheel meets the safety guard. It can be adjusted as necessary to maintain a set distance from the constantly decreasing diameter of the wheel.

Rule

WAC 296-806-40510

Use a work rest for off-hand grinding

Exemption:

- You don't need to use a work rest if:
  - The size, shape, weight or finishing area of the workpiece prevents its use
    or
  - Contact with the grinding wheel below the horizontal plane of the spindle is necessary

You must

- Use a work rest to support the work.
- Make sure the work rest is:
  - Rigidly constructed
  - Adjustable to compensate for wheel wear
  - Adjusted only when the wheel is stopped
  - Securely clamped after each adjustment
  - Kept within 1/8 inch of the wheel

WAC 296-806-40512

Make sure abrasive wheels are safe to use

You must

- Do the following before mounting a wheel:
  - Visually inspect the wheel for cracks or damage
  - Perform a ring test for cracks if the size and shape of the wheel permits testing
  - Make sure the spindle speed of the machine isn't greater than the operating speed of the wheel
- Make sure a damaged or cracked wheel isn't mounted or used.

Note:

➢ Wheels that have gouges, grooves, other damage, or material buildup on the grinding surface need to be dressed or trued to correct the problem. Wheels that can't be trued are considered damaged and can't be used.

Helpful tool:

You can find information about how to perform a ring test in the Resources section of this chapter.

Rule

WAC 296-806-40514

Mount wheels properly

You must

1) Make sure wheels fit freely on the spindle, wheel sleeves, or adaptors, and remain free under all grinding conditions.
2) Make sure wheel, blotter and flange surfaces that contact each other are flat and free of foreign particles.
3) Make sure any reducing bushing used in the wheel hole:
   - Fits freely on the spindle and maintains proper clearance
     and
   - Doesn't exceed the width of the wheel or contact the flanges
4) Make sure that multiple wheels mounted between a single set of flanges are either:
   - Cemented together
     or
   - Separated by spacers that have a diameter and bearing surface that's the same as the mounting flanges

WAC 296-806-40516

Use proper flanges

You must

- Mount all abrasive wheels between flanges that have a diameter at least 1/3 the diameter of the wheel.

Exemption:

- This flange requirement doesn't apply to the following wheels:
  - Mounted wheels (wheels permanently bonded to a shaft or mandrel)
  - Abrasive disc wheels (inserted nut, inserted washer and projecting stud type)
  - Plate mounted wheels
  - Cylinder, cup, or segmental wheels mounted in chucks
  - Types 27, 28, and 29 wheels
  - Internal wheels less than 2 inches in diameter
  - Modified Type 6 and 11 wheels (Terrazzo)
  - Types 1 and 27A cutting-off wheels

You must

- Make sure flanges are:
  - Dimensionally accurate
  - Properly balanced
  - Flat
  - Free of rough surfaces or sharp edges
- Make sure the driving flange is:
  - Part of the spindle
    or
  - Securely fastened to the spindle

-Continued-

Rule

WAC 296-806-40516 (Continued)

- Make sure, if a wheel is mounted between two flanges, that both flanges:
  - Are the same diameter
    and
  - Have equal bearing surfaces

Exemption:

- The following wheels don't require same diameter, equal bearing surface flanges:
  - Types 27, 28, and 29 wheels with adaptors
  - Modified Types 6 and 11 wheels with tapered K dimension
  - Internal wheels less than 2 inches in diameter

WAC 296-806-40518

Make sure flanges are in good condition

You must

- Make sure flange bearing surfaces are in good condition.
- Replace or remachine a flange with a mounting surface that has any of the following problems:
  - Warped
  - Burred on the bearing surface
  - Excessively worn (thickness or diameter)
  - Out of true

Reference:

Flanges that are refaced or trued need to satisfy minimum dimension requirements specified in Safety Requirements for the Use, Care and Protection of Abrasive Wheels, ANSI B7.1-2000.

WAC 296-806-40520

Use specific flanges for Type 1 cutting-off wheels

You must

- Mount Type 1 cutting-off wheels between flanges that are:
  - Properly relieved with matching bearing surfaces
  - At least ¼ the wheel diameter

WAC 296-806-40522

Use specific flanges for Type 27A cutting-off wheels

You must

- Mount Type 27A cutting-off wheels between flanges that are:
  - Flat (unrelieved) with matching bearing surfaces
    and
  - At least ¼ the wheel diameter

Rule

WAC 296-806-40524

Use blotters when required

Exemption:

- You don't need to use a blotter with any of the following:
  - Mounted wheels (wheels permanently bonded to a shaft or mandrel)
  - Abrasive disc and Type 2 wheels which are mounted by inserted nuts, inserted washers, or projecting studs
  - Plate mounted wheels
  - Wheels mounted in chucks (such as cylinders and segmental wheels)
  - Types 27, 28, and 29 wheels
  - Type 1 and Type 27A cutting-off wheels
  - Internal wheels less than 2 inches in diameter
  - Diamond and cubic boron nitride wheels with metal or carbon fiber cores

You must

- Use a blotter between each flange and the abrasive wheel surface to uniformly distribute flange pressure.
- Make sure the blotter covers the entire flange contact area.
- Use a new blotter each time a wheel is mounted unless the wheel has a blotter already attached to it by the manufacturer.
- Make sure scuffed or damaged blotters aren't used.

WAC 296-806-40526

Meet specific blotter requirements when using modified Types 6 and 11 wheels (terrazzo)

You must

- Apply the blotter to the flat side only when mounting Modified Types 6 and 11 wheels (terrazzo).

Calenders

WAC 296-806-410

Summary

- In addition to the requirements in this section, you need to refer to the following sections of this chapter in order to fully protect your employees from machine hazards:
  - Requirements for All Machines, WAC 296-806-200 and WAC 296-806-300

This section applies only to hazards associated with calenders in the rubber and plastics industry where two or more metal rolls are set vertically and revolving in opposite directions.

YOUR RESPONSIBILITY:

To protect employees from hazards associated with calenders

You must

Provide calender safety controls
WAC 296-806-41002 410-2

Follow these stopping limit requirements for calenders
WAC 296-806-41004. 410-4

Rule

WAC 296-806-41002

Provide calender safety controls

Exemption:

- These rules don't apply to calenders if the machinery is permanently set up so employees:
  - Can't reach through, over, under, or around to come in contact with the roll bite
    or
  - Can't be caught between a roll and nearby objects

You must

1) Provide a safety trip control for the face of the calender that meets **all** of the following:
   - Provided in front and back of each calender
   - Is accessible
   - Operates readily upon contact
2) Provide **at least one** of the following safety trip controls for the face of the calender:
   - Safety trip rods, tripwire cables or wire center cords that:
     - Are within reach of the operator and the bite (nip point)
     - Operate whether pushed or pulled
     - Are located across each pair of in-running rolls extending the length of the face of the rolls.
   - Pressure sensitive body bars that:
     - Are approximately 40 inches vertically above the working level
     - Are horizontally at 34 inches from the in-running nip point
     - Operate readily by pressure of the mill operator's body

-Continued-

WAC 296-806-41002 (Continued)

You must

3) Include safety trip rods, cables or cords, in addition to the pressure sensitive body bars, if **both** of these apply:
   - In-running rolls are located below the bar
     and
   - The operator needs to duck under the bar
4) Provide a safety cable or wire center cord on both sides of the calender that:
   - Operates readily when pushed or pulled
   - Is connected to the safety trip

Note:

➢ The center cord should be **all** of the following:
- 12 inches or less from the faces of the individual rolls
- At least 2 inches from the calender frame
- Anchored to the frame not more than 6 inches from the floor or operator's platform

Rule

WAC 296-806-41004

Follow these stopping limit requirements for calenders

You must

- Make sure that calenders are stopped within 1¾ percent of the fastest speed at which they operate when empty.
  - When calenders operate at more than 250 feet per minute, stopping distances above 1¾ percent of their fastest speed are allowed, but must have engineering support.

Helpful tool

Calender Stopping Distance Chart

You can find a copy of this chart in the Resources section of this chapter.

Compactors

WAC 296-806-415

Summary

- In addition to the requirements in this section, you need to refer to the following sections of this chapter in order to fully protect your employees from machine hazards:
  - Requirements for All Machines, WAC 296-806-200 and WAC 296-806-300

This section applies to all stationary compactors in your workplace.

YOUR RESPONSIBILITY:

To protect employees from hazards associated with stationary compactors

You must

Safeguard hazardous moving parts of stationary compactors
WAC 296-806-41502 415-2

Follow these requirements for compactor controls
WAC 296-806-41504 415-3

Follow these requirements for compactor access doors and covers
WAC 296-806-41506 415-4

Follow these requirements for compactors that cycle automatically
WAC 296-806-41508 415-4

Rule

WAC 296-806-41502

Safeguard hazardous moving parts of stationary compactors

You must

- Prevent the compactor from operating while employees have any body parts in the compactor or hazard area.
- Provide a safeguarding method that prevents employees from putting hands, fingers, or any body part into the compactor during operation.

Note:

Examples of safeguarding methods include:

- Making sure the compactor won't compact material while the gate or door is open.
- Installing a guard, loading hopper, or enclosure at least 42 inches high that prevents:
  - Entry of hands, fingers, or any body part into the loading chamber during operation.
  - An operator from being caught between moving parts of the equipment and material.
  - The creation of any hazard between the guard and moving parts.
- You may also provide sustained manual pressure controls located so the operator can't reach, but can still see, the point of operation if a guard isn't used.

Reference:

For additional requirements, when adjusting or clearing jams from compactors, see Lockout/Tagout (Control of Hazardous Energy), Chapter 296-803 WAC.

WAC 296-806-41504

Follow these requirements for compactor controls

You must

- Follow these requirements for compactor controls:
  - Each control must have its function clearly labeled.
  - Controls must be designed and located to prevent them from unintentionally activating.
  - Electric stop buttons, including emergency stop buttons, must be:
    - Red in color, distinguishable from all other controls by size, and not recessed.
  - Emergency stop controls must be either:
    - Readily accessible to the operator
      or
    - Located within 3 feet (91.4 cm) of the point of operation or feed area **or** if chute fed, within 3 feet (91.4 cm) of the access door.
    - An electrical disconnect must be located within sight, no more than 50 feet (1,524 cm), from the operating control panel.

Rule

WAC 296-806-41506

Follow these requirements for compactor access doors and covers

You must

- Make sure access covers meet at least one of the following:
  - Interlocked
  - Secured by a lockable device
  - Removable by hand tools only
- Make sure any loading chamber access door has an interlock system that prevents cycling motion when the door is open.

WAC 296-806-41508

Follow these requirements for compactors that cycle automatically

You must

- Use automatic cycling controls only on compactors where the loading chamber is located so that it can't be accessed during operation.

Conveyors

WAC 296-806-420

Summary

• If your specific conveyor or operation isn't listed here, then follow any general requirements in this section along with the "Requirements for All Machines" found in this chapter, WAC 296-806-200 and WAC 296-806-300.

This section applies to hazards related to conveyors and conveying systems, including bulk material, package, or unit handling types. These requirements are designed to protect employees operating, maintaining, cleaning, and working around conveyors.

Exemption:

- This section doesn't apply to conveyor systems used primarily for moving people.

YOUR RESPONSIBILITY:

To make sure all conveyors in your workplace are constructed, operated, and maintained in a safe manner

GENERAL REQUIREMENTS FOR CONVEYORS

You must

Follow these requirements for conveyors
WAC 296-806-42002 420-6

Provide emergency stops on conveyors
WAC 296-806-42004 420-6

Label conveyor controls
WAC 296-806-42006 420-7

Prohibit riding on conveyors
WAC 296-806-42008 420-8

Provide safe access to conveyors
WAC 296-806-42010 420-8

Conveyors

WAC 296-806-420

Summary

Provide backstop or anti-runaway devices to incline, decline, or vertical conveyors
WAC 296-806-42012 420-9

Make only safe alterations to conveyors
WAC 296-806-42014 420-9

Inspect and replace worn of conveyor parts
WAC 296-806-42016 420-9

Follow these requirements for replacing conveyor parts
WAC 296-806-42018 420-10

Follow these requirements for spill guards
WAC 296-806-42020 420-10

Provide pedestrian overpasses for conveyors
WAC 296-806-42022 420-11

Guard openings to hoppers and chutes
WAC 296-806-42024 420-12

Install guideposts
WAC 296-806-42026 420-13

BELT CONVEYORS

Guard nip points on belt conveyors
WAC 296-806-42028 420-14

Install emergency stop controllers on overland belt conveyors
WAC 296-806-42030 420-15

Install belt conveyor overpasses
WAC 296-806-42032 420-16

Summary

CHAIN CONVEYORS

Safeguard chain conveyors
WAC 296-806-42034 420-17

Guard return strands on chain conveyors
WAC 296-806-42036 420-17

Guard chain conveyors that are used as a transfer mechanism
WAC 296-806-42038 420-18

ELEVATOR CONVEYORS

Prevent material from falling off of elevator conveyors
WAC 296-806-42040 420-18

INCLINED RECIPROCATING CONVEYORS (SHAKERS)

Provide protection where employees must load shakers
WAC 296-806-42042 420-19

Provide grating over silo and bunker openings for shuttle conveyors
WAC 296-806-42044 420-19

MOBILE CONVEYORS

Guard wheels and rails on mobile conveyors
WAC 296-806-42046 420-20

Prevent hazardous motion on mobile conveyors
WAC 296-806-42048 420-20

Provide a detector for mobile conveyors
WAC 296-806-42050 420-21

Provide safe access on mobile conveyors
WAC 296-806-42052 420-21

Conveyors

WAC 296-806-420

Summary

PUSHER BAR CONVEYORS

Guard pusher-bar conveyors
WAC 296-806-42054 420-21

ROLLER CONVEYORS

Prohibit walking on roller-type conveyors
WAC 296-806-42056 420-22

Use speed controls for roller and wheel conveyors
WAC 296-806-42058 420-22

Safeguard belt-driven live roller conveyors
WAC 296-806-42060 420-23

SCREW CONVEYORS

Guard screw conveyors
WAC 296-806-42062 420-24

SKIP HOISTS

Provide slack-cable switches on hoists
WAC 296-806-42064 420-25

Block the skip bucket and counterweight guides
WAC 296-806-42066 420-25

Protect against wire rope coming off sheaves
WAC 296-806-42068 420-25

SLAT AND ROLLER SLAT CONVEYORS

Safeguard slat and roller-slat conveyors
WAC 296-806-42070 420-26

Summary

TOWED CONVEYORS

Provide a safe method for disengaging the tow pin
WAC 296-806-42072 420-26

Protect employees from moving carts on towed conveyors
WAC 296-806-42074 420-27

Provide clearances and warnings for carts on towed conveyors
WAC 296-806-42076 420-27

Mark projections above the floor
WAC 296-806-42078 420-28

Rule

GENERAL REQUIREMENTS FOR CONVEYORS

WAC 296-806-42002

Follow these requirements for conveyors

You must

- Construct, operate, and maintain all conveyors according to this chapter and the American National Standards Institute (ANSI) B20.1-1957.
- Make sure all new conveyors constructed after January 1, 2005, meet the requirements of the American Society of Mechanical Engineers (ASME) B20.1-1996.

WAC 296-806-42004

Provide emergency stops on conveyors

You must

- Make sure each conveyor has an emergency stopping device such as an emergency stop button, pull cord, or similar device.
- Make sure each emergency stopping device meets **all** of the following requirements. They must:
  - Stop the conveyor a safe distance from the hazard
  - Be easily identified
  - Directly control that conveyor
  - Require a manual reset
  - **Not** be overridden from another location
  - **Not** require other equipment to be stopped in order to stop the conveyor

-Continued-

WAC 296-806-42004 (Continued)

- Make sure where there's the possibility of an employee falling onto a conveyor, that the emergency stopping device for conveyors feeding or dumping into a hazardous machine such as a barker, saw, hog, or chipper is **at least one** of the following:
  - Under the continuous control of an operator who can't fall onto the conveyor and has full view of the material entrance
    or
  - Located where it can be reached from a sitting position on the conveyor where it feeds or dumps into the hazardous machine

WAC 296-806-42006
Label conveyor controls

You must

- Clearly label the function of each conveyor control.

Note:

➢ Controls and wiring that are no longer used should be removed from control stations.

Rule

WAC 296-806-42008

Prohibit riding on conveyors

You must

- Prohibit employees from riding on conveyors.

Exemption:

- You don't need to prohibit riding on an assembly conveyor moving 80 feet or less per minute or a conveyor with a station specifically designed for operating personnel.

WAC 296-806-42010

Provide safe access to conveyors

You must

- Provide a way to safely inspect and maintain conveyors located more than 7 feet from the floor.

Reference:

➢ Some additional requirements for protecting employees inspecting and maintaining conveyors can be found in:
  - Lockout/Tagout (Control of Hazardous Energy), Chapter 296-803 WAC
  - Personal Fall Arrest Systems, WAC 296-24-88050

WAC 296-806-42012

Provide backstop or anti-runaway devices on incline, decline, or vertical conveyors

You must

- Make sure all incline, decline, or vertical conveyors use backstop or anti-runaway devices when there's a danger of conveyor reversal or runaway.

WAC 296-806-42014

Make only safe alterations to conveyors

You must

- Make sure, when making conveyor alterations, that you don't affect safety characteristics such as emergency stop controls, guards, or the incline of the conveyor, if such changes would create a danger to workers.

WAC 296-806-42016

Inspect and replace worn conveyor parts

You must

- Carefully inspect and replace any conveyor part that shows signs of significant wear before it becomes a hazard.

Rule

WAC 296-806-42018

Follow these requirements for replacing conveyor parts

You must

- Make sure replacement conveyor parts are equal to or exceed the manufacturer's specifications.

WAC 296-806-42020

Follow these requirements for spill guards

You must

- Install protective or spill guards wherever conveyors pass next to or over working areas or passageways.
  - These guards must be designed to catch and hold any materials that may become dislodged or fall off.

Reference:

➢ For specific requirements when conveyors pass over emergency exit routes, see Exit Routes, WAC 296-800-310.

WAC 296-806-42022

Provide pedestrian overpasses for conveyors

You must

- Provide a pedestrian overpass covering the full width of a passageway if **one** of these conditions exists:
  - The working strand of a conveyor crosses within 3 feet of floor level
  - Workers must step over the strand and trough at or below floor level
- Provide a pedestrian overpass where workers can't pass under the conveyor safely.
  - The sides of the crossing platform must have standard railings if **one** of the following exists:
    - The overpass is more than 4 feet high
    - The conveyor feeds a dangerous machine such as saws, chippers, hogs, or galvanizing tanks

Reference:

➢ For guardrail requirements see Railing, Toeboards, and Cover Specifications, WAC 296-24-75011.

Rule

WAC 296-806-42024

Guard openings to hoppers and chutes

You must

- Guard all openings to hoppers, chutes, and elevator-type conveyors to prevent workers from:
  - Falling or stepping into them
  - Making any kind of bodily contact with conveyors

Note:

➢ Grating provided at floor level with no openings larger than 2 inches (50mm) that's strong enough to withstand any load of personnel or trucks that may be imposed upon it, is acceptable guarding.

You must

- Do **all** of the following when dumping operations use chutes or hoppers that are flush with the floor and their use can't be guarded:
  - Place a temporary guardrail around ground or floor-level hoppers when dumping operations are **not** in progress.
  - Post warning signs in a conspicuous location alerting personnel to the presence of an open pit in order to protect employees when dumping operations are in progress.

Reference:

➢ For guardrail requirements see Railing, Toeboards, and Cover Specifications, WAC 296-24-75011.

WAC 296-806-42026

Install guideposts

You must

- Install guideposts to direct employees driving trucks, loaders, or other equipment to the pit, hopper, or chute.

Rule

BELT CONVEYORS

WAC 296-806-42028

Guard nip points on belt conveyors

Exemption:

- This rule doesn't normally require guards along the conveyor at the point where the belt rides on return rollers, such as return-belt idlers unless hazardous conditions such as long, tight or heavy belts exist.

Illustration 420-1
RETURN BELT IDLERS

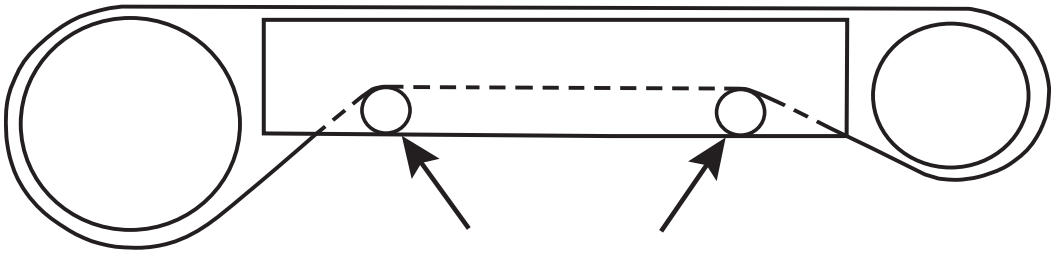

WAC 296-806-42028(Continued)

You must

- Place nip point guards at **all** of these points:
  - Where the belt wraps around the pulley
  - At terminals, take-ups, and snub rollers where the belt changes directions at transfers and deflectors
  - At the discharge end
  - At other points where workers may be injured by nip or shear points

Note:

➢ The practice of applying a belt dressing or other foreign material to a rotating drive pulley or a conveyor belt is hazardous and should be avoided.

WAC 296-806-42030

Install emergency stop controllers on overland belt conveyors

You must

- Install permanent emergency pull cords or similar emergency stop controllers at points where workers are normally stationed along overland belt conveyors.

Note:

➢ Personnel that patrol overland belt conveyors may use portable emergency stop controllers instead of permanently installed pull cords and push-button stations.

Rule

WAC 296-806-42032

Install belt conveyor overpasses

You must

- Install a pedestrian overpass or underpass along the sides of long overland belt conveyors, where there's the most foot traffic.
  - The distance between overpasses shouldn't exceed 300 meters or 1,000 feet.

CHAIN CONVEYORS

WAC 296-806-42034
Safeguard chain conveyors

You must

- Provide safeguards for drive, tail, and idler sprocket pulleys where the chain creates a nip or shear point

WAC 296-806-42036
Guard return strands on chain conveyors

You must

- Provide a way to catch and support the ends of a chain that break over a passageway.
- Provide a strong enough trough to carry the weight from a broken chain on conveyors when return strands operate within 7 feet of the floor.

Rule

WAC 296-806-42038

Guard chain conveyors that are used as a transfer mechanism

You must

- Guard chain conveyors whose moving chains can't be enclosed without impairing their function by **one** of the following methods:
  - Distance as required in Make sure safeguarding by distance meets these requirements, WAC 296-806-20056
  - Personnel barriers
  - Warning signs where personnel barriers aren't practical

Note:

➢ Chain conveyors with moving chains that can't be enclosed include those:
- Mounted within another conveyor
- Raised and lowered as a transfer mechanism

ELEVATOR CONVEYORS

WAC 296-806-42040

Prevent material from falling off of elevator conveyors

You must

- Install strong guards, screens, or barricades to prevent material from falling in any direction into the shaft way of elevator-type conveyors, except at loading and unloading areas.
- Install automatic shaft way gates or suitable barriers at each floor level where material is loaded or unloaded.

INCLINED RECIPROCATING CONVEYORS (SHAKERS)

WAC 296-806-42042

Provide protection where employees must load shakers

You must

- Provide standard guardrails or snap chains along loading sides of the shaker where personnel must load or unload material.
  - Snap chains must be at least 39 inches high at their lowest point.
- Make sure controls are located so the conveyor can't be started by an employee on the moving part of the conveyor.

WAC 296-806-42044

Provide grating over silo and bunker openings for shuttle conveyors

You must

- Provide grating with openings to match the size of the material being discharged into silos or bunkers. Make sure openings are:
  - Small enough so that workers can't fall through
  - Protected by other effective means if the material size requires openings large enough for a worker to fall through

Rule

MOBILE CONVEYORS

WAC 296-806-42046
Guard wheels and rails on mobile conveyors

You must

- Install sweeps in front of the nip points created by the wheels and rails to deflect objects that could derail the conveyor.

WAC 296-806-42048
Prevent hazardous motion on mobile conveyors

You must

- Make sure mobile conveyors have **at least one** of the following to prevent hazardous motion:
  - Brakes
  - Rail clamps
  - Other position-locking devices
- Provide limit switches that will stop travel when exceeding the design limits of rail-mounted mobile conveyors
- Provide rail stops to keep the conveyor from traveling past its designed end location.

WAC 296-806-42050
Provide a detector for mobile conveyors

You must

- Provide a detector to stop conveyor movement when the operation creates a danger of running into a stockpile or other obstacle.

WAC 296-806-42052
Provide safe access on mobile conveyors

You must

- Make sure that access stairways, ladders, and platforms are designed and located to avoid the shear or nip point hazards of the conveyor and moving machinery.

PUSHER-BAR CONVEYORS

WAC 296-806-42054
Guard pusher-bar conveyors

You must

- Provide a guard when hazards exist at each of these points:
  - At the discharge point where the bar passes through the bed
  - Where there's a shear point between the return pusher bar and a frame member

Rule

ROLLER CONVEYORS

WAC 296-806-42056
Prohibit walking on roller-type conveyors

You must

- Prohibit employees from walking on the rolls of roller-type conveyors.
- Tread plates or other types of walkways can be used between the rollers as a walking surface for operators when performing their duties.

WAC 296-806-42058
Use speed controls for roller and wheel conveyors

You must

- Avoid safety hazards created by unit or package speeds by **one** of the following methods:
  - Limiting the length of the sloped run
  - Using speed retarders or brakes
  - Other means of providing speed control
- Make sure rollers and wheels are free running to prevent locked wheels from steering or pulling materials to one side or off the conveyor.

WAC 296-806-42060

Safeguard belt-driven live roller conveyors

You must

- Guard belt and roller nip points by **one** of the following methods:
  - Space load-carrying rollers to prevent access to the belt and roller nip points.
  - Insert rods or plates between the rollers to prevent access to the belt and roller nip points.
  - Use rollers that pop out when something contacts the nip point.
  - Distance safeguarding found in:
    - Make sure safeguarding by distance meets these requirements, WAC 296-806-20056.

Reference:

➢ For nip points and sheer hazards on power-driven (live) roller conveyors see Guard nip points on belt conveyors, WAC 296-806-42028.

Rule

SCREW CONVEYORS

WAC 296-806-42062

Guard screw conveyors

You must

- Enclose the rotating screw to prevent contact with the shear points where it passes the sides of the trough or casing
- Guard screw conveyors requiring an open housing by using **one** of the following:
  - Make sure safeguarding by distance meets these requirements, WAC 296-806-20056
  - Make sure guardrails used for safeguarding meet these requirements, WAC 296-806-20058
- Construct feed openings for shovel, front-end loader, or other manual or mechanical equipment so that the conveyor screw is covered by a grating.
  - If the nature of the material is such that a grating can't be used, then the exposed section of the conveyor must be guarded by a railing and warning signs.

SKIP HOISTS

WAC 296-806-42064
Provide slack-cable switches on hoists

You must

- Provide and arrange slack cable switches to cut power to the drive and set the brake when the skip or counterweight hoisting ropes either:
  - Develop slack
    or
  - Lose tension due to sticking in the guides, over travel, or for any other reason.

WAC 296-806-42066
Block the skip bucket and counterweight guides

You must

- Make sure the skip bucket and counterweight are blocked in their guides when the brake or any part of the drive train between the brake and the drum shaft are being repaired or replaced.

WAC 296-806-42068
Protect against wire rope coming off sheaves

You must

- Fit all sheaves with sheave guards to prevent the wire rope from coming off under slack cable or similar conditions

Rule

SLAT AND ROLLER-SLAT CONVEYORS

WAC 296-806-42070
Safeguard slat and roller-slat conveyors

You must

- Provide **either** of these safeguards at the tail end of a slat conveyor if the slats are above the centerline of the chain:
  - A guard over the hazardous tail end
    or
  - Warning signs if guards are impractical because of material flowing over the tail sprocket
- Provide **either** of these safeguards when there's a gap between the slats wide enough to permit access to cross members below the slats:
  - A continuous pan under the slats
    or
  - Keep all cross members a safe distance from the slats

TOWED CONVEYORS

WAC 296-806-42072
Provide a safe method for disengaging the tow pin

You must

- Provide a method for the operator to disengage the tow pin from a conveyor pusher without being in front of the cart.

WAC 296-806-42074

Protect employees from moving carts on towed conveyors

You must

- Make sure runaway carts are unable to exit ramps and enter work areas.
- Have a barrier of sufficient strength and height on ramps with pedestrian or traffic aisles to prevent a runaway cart from entering the aisle.
- Have signs warning employees not to enter ramps that don't have pedestrian or traffic aisles.

WAC 296-806-42076

Provide clearances and warnings for carts on towed conveyors

You must

- Provide clearance space for personnel in all of the following:
  - Between the sides of carts
  - Between any load overhanging the side of a cart
  - Any fixed or moving object
- Identify the cart path with floor stripes that are:
  - Parallel to the cart path
  - Arranged so one line is on each side of the path
  - Located a safe distance from the edge of the cart or overhanging load
- Mark reduced clearance areas with appropriate warning signs.

Note:

➢ An example of a reduced clearance area is an area where a cart goes through a wall opening.

-Continued-

Rule

WAC 296-806-42076 (Continued)

You must

- Place an appropriate warning on those areas where a cart may unexpectedly change direction, such as switching off the main line into a transfer conveyor or a spur.

Note:

➢ An example of an appropriate warning would be to use diagonal stripes on the floor between clearance lines.

You must

- Install a sign, signal, or other warning where carts start automatically.

WAC 296-806-42078

Mark projections above the floor

You must

- Mark the area around projections above the floor with appropriate diagonal stripes, warning signs, or both.

Note:

➢ This is especially important if projections above the floor are unpredictable or occur intermittently.

Food Processing Equipment

WAC 296-806-425

Summary

• If your specific food processing machine or operation isn't listed here, then follow any facilities requirements in this section along with the "Requirements for All Machines" found in this chapter, WAC 296-806-200 and WAC 296-806-300.

This section applies to:

- All businesses that manufacture or process food, whether or not they are contained inside food stores
  and
- The design, installation, operations, and maintenance of machinery and equipment used in the food processing industry.

YOUR RESPONSIBILTY:

To protect employees from hazards associated with food processing facilities and machines

You must

FACILITIES

Provide locks on chamber doors of large air conditioning units
WAC 296-806-42502 425-7

Use proper door locks on rack-type bread coolers
WAC 296-806-42504 425-7

Provide see-through panels on fermentation room doors
WAC 296-806-42506 425-7

Cover exposed hot pipes
WAC 296-806-42508 425-8

Provide extension piping on stationary lubrication fittings
WAC 296-806-42510 425-8

Food Processing Equipment

WAC 296-806-425

Summary

Provide hoods for pan washing tanks
WAC 296-806-42512 425-8

Safeguard proof boxes
WAC 296-806-42514 425-9

Safeguard storage bins
WAC 296-806-42516 425-10

MATERIAL HANDLING

Follow these design requirements for bag lifts (bag arm elevators) and chutes
WAC 296-806-42518 425-11

Follow these requirements for chain tackle
WAC 296-806-42520 425-12

Safeguard conveyors
WAC 296-806-42522 425-12

Use properly designed covers for screw conveyors (augers)
WAC 296-806-42524 425-13

Safeguard pallet jacks and hand trucks
WAC 296-806-42526 425-13

SPECIFIC FOOD PROCESSING EQUIPMENT

Safeguard bakery slicers
WAC 296-806-42528 425-14

Safeguard bakery wrapping machines
WAC 296-806-42530 425-14

Provide troughs with antifriction-bearing casters
WAC 296-806-42532 425-15

Summary

Follow these requirements for trough hoists and similar equipment
WAC 296-806-42534 425-15

Follow these requirements for dividers
WAC 296-806-42536 425-16

Safeguard manually-fed dough and cross-roll brakes
WAC 296-806-42538 425-17

Provide a guard or tripping device on reversible dough brakes
WAC 296-806-42540 425-18

Follow these requirements for doughnut machines
WAC 296-806-42542 425-18

Follow these requirements for dumpbins and blenders
WAC 296-806-42544 425-19

Follow these requirements for flour-handling machines
WAC 296-806-42546 425-20

Follow these requirements for traveling or track-type flour scales
WAC 296-806-42548 425-20

Follow these requirements for food grinders and cutters
WAC 296-806-42550 425-21

Provide covers with interlocks on ingredient premixers, emulsifiers, and similar machines
WAC 296-806-42552 425-21

Follow these requirements for open fat kettles
WAC 296-806-42554 425-22

Follow these requirements for steam kettles
WAC 296-806-42556 425-22

Food Processing Equipment

WAC 296-806-425

Summary

Follow these requirements for chocolate melting, refining, and mixing kettles
WAC 296-806-42558 425-22

Safeguard meat-processing equipment (circular meat-cutting saws)
WAC 296-806-42560 425-23

Follow these requirements for horizontal dough mixers
WAC 296-806-42562 425-24

Follow these requirements for vertical mixers
WAC 296-806-42564 425-26

Follow these requirements for mechanical-feed moulders
WAC 296-806-42566 425-27

Follow these requirements for hand-fed moulders
WAC 296-806-42568 425-28

Design, install, and construct your ovens according to these requirements
WAC 296-806-42570 425-28

Properly locate emergency “stop” buttons and main shut-off valves for ovens
WAC 296-806-42572 425-29

Inspect and test safety devices on ovens
WAC 296-806-42574 425-29

Follow these requirements for peanut-cooling trucks
WAC 296-806-42576 425-30

Follow these requirements for pretzel rolling, pretzel stick extruding, rotary, and die machines
WAC 296-806-42578 425-30

Summary

Safeguard box and roll-type dough sheeters
WAC 296-806-42580 425-31

Provide proper enclosures for sifters
WAC 296-806-42582 425-31

Follow these requirements for sugar and spice pulverizers
WAC 296-806-42584. 425-32

Notes

FACILITIES

WAC 296-806-42502

Provide locks on chamber doors of large air conditioning units

You must

- Make sure all door locks on air conditioning unit chambers, that are large enough for employees to enter, can be operated from both inside and outside the chamber.

WAC 296-806-42504

Use proper door locks on rack-type bread coolers

You must

- Make sure all door locks can be operated from both inside and outside the bread cooler.

WAC 296-806-42506

Provide see-through panels on fermentation room doors

You must

- Provide shatterproof, see-through panels, made of wire glass or plastic, on fermentation room doors.

Rule

WAC 296-806-42508

Cover exposed hot pipes

You must

- Cover exposed hot (160^{0} F or more) water and steam pipes with insulating material wherever necessary to prevent employee contact.

WAC 296-806-42510

Provide extension piping on stationary lubrication fittings

You must

- Provide extension piping on stationary lubrication fittings to prevent workers from reaching into the hazardous area when lubricating moving machinery.

WAC 296-806-42512

Provide hoods for pan washing tanks

Exemption:

- This requirement doesn't apply to dishwashers or sanitizers used in restaurants or retail establishments.

You must

- Provide power-ventilated exhaust hoods over the tank.

WAC 296-806-42514

Safeguard proof boxes

You must

1) Make sure all door locks can be operated from both inside and outside the proof box.
2) Provide guide rails to center the racks as they enter, pass through, and leave the proof box if pans, boards, or trays may be easily dislodged.

Note:

- Guide rails aren't required in proof boxes unless there are 2 doors with a pass through or pull through design.

Rule

WAC 296-806-42516

Safeguard storage bins

Exemption:

- This requirement doesn't apply to under-the-counter ingredient bins found in retail stores.

You must

1) Provide locks or latches to keep storage bin covers closed, and gaskets or other equivalent devices, to make sure covers are dust-tight.

2) Make sure employees lock covers in the open position when entering bins.
   - Covers for bins that employees may enter must have a metal fastener (hasp) and lock that can be locked in the “open” position.

3) Provide a standard stationary safety ladder on the inside and outside of storage bins with sides more than 5 feet deep.
   - The ends of ladders must be kept away from moving screw conveyors.
   - Outside ladders must reach from floor level to the top of the bin.
   - Inside ladders must reach from the top of the bin to the bottom of the bin.

(4) Provide an electric interlock on the main entrance cover of large storage bins near the interior exit ladder.
   - The interlock needs to prevent feed and unloading screw motors from operating while the cover is open.

Reference:

➢ You may need to follow other requirements found in Confined Spaces, Chapter 296-811 WAC.

MATERIAL HANDLING

WAC 296-806-42518

Follow these design requirements for bag lifts (bag arm elevators) and chutes

You must

1) Make sure bag arm elevators with manual takeoff are designed to include:
   - Maximum operating capacity of 7 bags per minute.
   - Spacing of arms on the conveyor chain to obtain the full capacity of the elevator with the lowest possible chain speed.
   - An electric limit switch at the unloading end that automatically stops the conveyor chain if any bag doesn't clear the conveyor arms.
2) Make sure bag chutes (gravity chutes for handling flour bags) that incline more than 30° from horizontal:
   - Are designed to keep the speed of flour bags as low as possible
   - Provide an upturn at the lower end of the chute to slow down the bags
3) Prohibit the use of bag or barrel lifts as personnel lifts.
4) Prohibit manlifts in bakeries.

Definition:

Manlift is a device consisting of a power driven endless belt moving in one direction only, and provided with steps or platforms and handholds attached to it for the transportation of personnel from floor to floor.

Rule

WAC 296-806-42520

Follow these requirements for chain tackle

You must

1) Mark all chain tackle with the maximum load capacity so the marking is:
   - Prominently displayed
   - Legible
   - Permanent
2) Mark all chain tackle with minimum support specifications so the marking is legible and permanent.
3) Use safety hooks with chain tackle.

WAC 296-806-42522

Safeguard conveyors

You must

1) Install stop bumpers on all delivery ends of conveyors when products are manually removed.
2) Make sure all conveyors have “stop” buttons at **all** operating stations.
3) Provide emergency stop bars or switches at any point where both of these exist:
   - The conveyor feeds into a machine
     and
   - Pinch points or catching hazards exist

Reference:

➢ Additional requirements for conveyors are found in WAC 296-806-420.

WAC 296-806-42524

Use properly designed covers for screw conveyors (augers)

Exemption:

- This requirement doesn't apply to screw conveyors where there are drop or hinged bottom sections that can't remain airtight.

You must

- Design covers for screw conveyors that are:
  - Removable in convenient sections
  - Held in place with stationary clamps
    - Locate stationary clamps at intervals that will keep all covers dust tight.

WAC 296-806-42526

Safeguard pallet jacks and hand trucks

You must

1) Make sure motorized and non-motorized pallet jacks have a lock or other device that holds the handle in the vertical position when the hand truck isn't in use.
2) Make sure hand truck casters are set back from corners:
   - Locate them back from corners so they don't present a hazard to employee's toes and heels, but not close enough to cause the hand truck to become unstable.

Reference:

➢ Motorized hand trucks (pallet jacks) are classified as powered industrial trucks. Additional requirements for powered industrial trucks are found in Chapter 296-863 WAC.

Rule

SPECIFIC FOOD PROCESSING EQUIPMENT

WAC 296-806-42528

Safeguard bakery slicers

You must

1) Provide all slicers with a mechanical device to push the last loaf through the slicer knives.
2) Equip all slicers with an interlock to de-energize the motor whenever a door, panel, or other point of access to the cutting blades is open.
3) Protect employees sharpening blades by installing a barrier guard that provides an opening large enough for the sharpening stone to reach and sharpen slicer blades.
4) Provide automatic braking to stop slicers with endless band knives when the motor isn't energized.

WAC 296-806-42530

Safeguard bakery wrapping machines

You must

1) Extend or locate mechanical control levers that start and stop slicing machine conveyors and wrapping machines so an operator can control both machines from either location.

Note:

- The levers should be provided wherever necessary, but arranged so only one station can start the wrapping machine and conveyor assembly.
  - Set up or guard controls to prevent accidental starting.
- The electronic control station for starting and stopping the electric motor that drives the wrapping machine and conveyor should be near the clutch-starting lever.

-Continued-

WAC 296-806-42530 (Continued)

You must

2) Provide a protective cover plate over electric heaters on bakery wrapping machines.
   - The cover plate must be properly separated or insulated from heaters so the plate itself isn't a burn hazard to operators.

WAC 296-806-42532

Provide troughs with antifriction-bearing casters

You must

- Provide antifriction-bearing casters on troughs so operators can move and direct them with minimal effort.

WAC 296-806-42534

Follow these requirements for trough hoists and similar equipment

You must

1) Mark all hoists and similar equipment with the maximum loading capacity so the marking is:
   - Prominently displayed
   - Legible
   - Permanent
2) Mark all hoists with minimum support specifications so that the marking is legible and permanent.
3) Provide safety catches for the chain so that it will hold the load in any position.
4) Use safety hooks with hoists.

Rule

WAC 296-806-42536

Follow these requirements for dividers

You must

- Enclose or safeguard the moving parts in the back of the divider with **all** of the following:
  - A complete cover to enclose **all** moving parts **or** an enclosure or guard for each individual part to remove separate hazards.
  - A limit switch to shut off the machine when the rear cover is open.
  - A hinged guard on the back that can't be completely removed.
    - If a catch or brace is provided for holding the cover open, make sure it won't release due to vibrations or minor bumping, causing the cover to drop on an employee.

Note:

➢ Dividers as discussed in this section utilize pistons, knives and blades to cut and divide large quantities of dough. This doesn't apply to small vibrating or oscillating rounders.

WAC 296-806-42538

Safeguard manually-fed dough and cross-roll brakes

You must

1) Guard the top roll with a heavy-gage metal shield that extends over the roll to within 6 inches of the hopper bottom board.

Note:

➢ The shield may be perforated to allow observation of the dough entering the rolls.

You must

2) Provide an emergency “stop” bar that includes a self-engaging brake.
   - Locate it so that if the operator falls forward or gets their hands caught in the rolls, their body will press against the bar, causing the rolls to stop instantly by opening the circuit to:
     - De-energize the drive motor
     - Activate a spring-set magnetic brake
   - Activate the emergency “stop” bar before each shift to make sure it's functioning properly.

Rule

WAC 296-806-42540

Provide a guard or tripping device on reversible dough brakes

You must

- Provide a guard or tripping device on each side of the rolls of reversible dough brakes.
  - The guard or device must be designed so that it stops the machine or reverses the direction of the rolls, if moved by the operator.

WAC 296-806-42542

Follow these requirements for doughnut machines

You must

- Provide separate flues for venting both of the following:
  - Vapors from the frying section
    and
  - Products of combustion from the combustion chamber used to heat the fat

WAC 296-806-42544

Follow these requirements for dumpbins and blenders

Definition:

Dumpbin and blender is the part of the flour handling system where the containers of flour are emptied.

You must

1) Make sure dumpbin and blender hoods are large enough to prevent circulation of flour dust outside the hoods.
2) Provide a stop control device for dumpbins and blenders located close to the operator's work station.
3) Position dumpbins at an appropriate height from the floor so that operators can dump flour from bags without excessive strain or fatigue.
4) Provide a bag rest stop, when the edge of a dumpbin is more than 24 inches above the floor.

Rule

WAC 296-806-42546

Follow these requirements for flour-handling machines

You must

- Make sure the following safeguards are used when flour-handling systems are run in electrical unity with one another:
  - When the beginning of the system is located far from its final delivery end, make sure:
    - All electric motors operating the system have one control at each end

      and
    - Either control will stop all motors
  - Arrange control circuits for magnetic controllers so opening **any** limit switch on an individual unit will de-energize **all** motors on that unit.

WAC 296-806-42548

Follow these requirements for traveling or track-type flour scales

You must

- Provide bar handles for the moving of traveling or track-type flour scales.

Note:

➢ For easier grip, the bar should be at least one inch in diameter.

You must

- Guard trolley track wheels.

WAC 296-806-42550

Follow these requirements for food grinders and cutters

You must

- Make sure that food grinders and cutters:
  - Have an interlock so machines with removable hoppers can't be operated when the hopper is removed.
  - Limit access to hoppers where grid guards can't be used by providing feed conveyors or baffle-type hoppers. Hoppers must be both:
    - Enclosed and provided with hinged covers
      and
    - Equipped with an electric interlock so the machine won't operate with the cover open.

WAC 296-806-42552

Provide covers with interlocks on ingredient premixers, emulsifiers, and similar machines

You must

- Provide covers that attach to machines that have top openings.

Note:

➢ The covers should be arranged and interlocked so that power to the machine is shut off when the cover is opened far enough for the operator's fingers to come in contact with the beaters.

Rule

WAC 296-806-42554

Follow these requirements for open fat kettles

You must

1) Keep the floor around kettles in non-slip condition.
2) Make sure the top of the kettle is at least 36 inches above the floor or working level.

WAC 296-806-42556

Follow these requirements for steam kettles

You must

1) Provide positive locking devices to hold kettles in the desired position.
2) Provide safety devices for steam kettles according to:
    - The American Society of Mechanical Engineers (ASME) Pressure Vessel Code, section VIII, division I, Unfired Pressure Vessels, 2001, Kettles with Steam Jackets.

WAC 296-806-42558

Follow these requirements for chocolate melting, refining, and mixing kettles

You must

1) Provide a cover to enclose the top of the kettle.
2) Make sure the bottom outlet of each kettle is designed so the operator can't:
    - Reach in to touch the revolving paddle
    - Come in contact with the shear point between the paddle and the side of the kettle

WAC 296-806-42560

Safeguard meat-processing equipment (circular meat-cutting saws)

Exemption:

- These requirements don't apply to table-top slicers such as those used in delis and restaurants.

Reference:

➢ When bandsaws are used to cut meat, follow the requirements in Make sure bandsaws meet these requirements, WAC 296-806-48042.

You must

1) Make sure all circular meat cutting saws have both:
   - Constant pressure controls
     and
   - A brake that automatically begins to stop the blade when the switch is released
2) Make sure each circular meat-cutting saw has a protective guard between the operator and the blade.
3) Provide suspended, counterbalanced circular meat-cutting saws with guards that cover at least **one** of the following:
   - 25 degrees of the blade if the saw has two-hand controls
     or
   - 90 degrees of the blade if the saw can be operated with one hand
4) Provide saws that aren't suspended with a guard that covers 90 degrees of the blade.

Note:

➢ The size of the guard depends on whether it's suspended or has one- or two-handed controls.

Rule

WAC 296-806-42562

Follow these requirements for horizontal dough mixers

You must

1) Make sure mixers are equipped with both of the following:
   - An individual motor and control
     and
   - A conveniently located manual switch that prevents the mixer from being started during servicing or cleaning.
2) Locate electrical control stations so control operators have a full view of bowls in the “open” position.
   - These controls, other than a “stop” switch, must not be duplicated.
3) Provide mixers with a full enclosure over the bowl that remains closed whenever the agitator is in motion.
   - Minor openings in the enclosure during operation, such as ingredient doors and flour inlets, must each be less than 1½ square feet in area.

Exemption:

- The full enclosure doesn't have to remain closed if the mixer has a dumping arrangement that provides safety devices where operators must use both hands in either of these situations:
  - When the agitator is in motion under power and the bowl is open more than 1/5 of its total opening
    or
  - When starting the agitator, if the bowl is open more than 1/5 of its total opening.

-Continued-

WAC 296-806-42562 (Continued)

You must

4) Make sure overhead covers or doors that can accidentally close are either:
   - Counterbalanced to remain in the “open” position
     or
   - Provided with a catch, brace, or other positive means to hold them open until the operator releases them.

5) Locate valves and controls that regulate the coolant in mixer jackets so they can be accessed without creating hazards to the operator.

Rule

WAC 296-806-42564

Follow these requirements for vertical mixers

You must

1) Provide a safeguarding device to protect employees from the point of operation, if the nature of the work exposes them to contact with:
   - The pinch point where the mixing tool meets the bowl
   - The catching hazard of the mixing tool

Note:

➢ When evaluating exposure, the following conditions need to be considered:
- How the mixer functions such as visibility of the agitator or ability to accidentally switch the mixer on.
- How the worker performs operations such as adding ingredients without scraping the bowl or reaching into the bowl when the mixer is in motion.
- How close the worker gets to the hazard during operation.
- The worker's tools, clothing, jewelry, or hair that might get caught or fall into mixer
- Type of guarding, if any
- Slipping or tripping hazards in the area.

You must

2) Make sure mixers are equipped with both of the following:
   - An individual motor and control
     and
   - A conveniently located manual switch that prevents the mixer from being started during servicing or cleaning.

-Continued-

WAC 296-806-42564 (Continued)

3) Make sure overhead panels or doors on mixers that can accidentally close are either:
   - Counterbalanced to remain in an open position
     or
   - Provided with catches, braces, or other positive means to hold them open until the operator releases them.
4) Make sure bowl-locking devices are the type that must be intentionally unlocked by the operator.
5) Provide devices for moving filled bowls that weigh more than 80 pounds in and out of the mixing position on the machine.

WAC 296-806-42566

Follow these requirements for mechanical-feed moulders

You must

- Make sure hoppers for mechanical-feed moulders are designed and connected to the proofer so employee's hands can't contact the in-running rolls.

Rule

WAC 296-806-42568

Follow these requirements for hand-fed moulders

You must

1) Provide hand-fed moulders with **either** of the following, so employee's hands cannot enter the hopper and contact in-running rolls:
   - A hopper that can be extended high enough to protect the employee
     - The top edge of the hopper needs to be well rounded to prevent injury when struck or bumped by an employee's hand

       or
     - A belt feed device
2) Provide **each** of these workers with a stopping device that can be easily reached:
   - The operator feeding the moulder
   - The employee taking the dough away from the moulder.

WAC 296-806-42570

Design, install, and construct your ovens according to these requirements

You must

- Make sure all ovens manufactured or installed **before** August 13, 1999 meet or exceed ANSI Z50.1-1947 design, manufacturing, and installation requirements.
- Make sure all ovens manufactured or installed on or **after** August 13, 1999 meet the design, manufacturing, and installation requirements in ANSI/NFPA 86-1999.

WAC 296-806-42572

Properly locate emergency "stop" buttons and main shut-off valves for ovens

You must

1) Locate emergency stop buttons on mechanical ovens close to where operators are stationed.
2) Locate main shutoff valves where they can be accessed in case of an emergency.
   - Main shutoff valves that permit turning off the fuel or steam in case of an emergency must operate independently of any automatic valves.

WAC 296-806-42574

Inspect and test safety devices on ovens

You must

1) Inspect ovens at least twice a month by a formally appointed, properly trained, bakery employee.
   - Include the following in your inspection:
     - All safety devices
     - Testing of all safety shutoff valves, making sure they are positively tight
2) Make sure a representative of the oven manufacturer performs an annual inspection.
3) Test all piping on ovens to make sure they are gas tight.
4) Test oven systems as follows;
   - Test duct systems on indirect recirculating ovens that operate under pressure for tightness at the following intervals:
     - When the oven is first started
     - At least every 6 months after that

Rule

WAC 296-806-42576

Follow these requirements for peanut-cooling trucks

You must

- Make sure the entire top of the peanut-cooling truck has a grid-type cover.

WAC 296-806-42578

Follow these requirements for pretzel rolling, pretzel stick extruding, rotary, and die machines

You must

- Protect the operator's hands from getting caught in moving parts by doing **at least one** of the following:
  - Cover the entire opening of dough hoppers with grid-type guards
  - Extend the hopper higher

WAC 296-806-42580

Safeguard box and roll-type dough sheeters

You must

1) Guard exposed rolls with **either** of these methods:
   - Guard the nip point of exposed sheeting rolls at the point where the dough enters the rolls
     or
   - Provide an emergency “stop” bar that extends the length of unguarded rolls that will stop the rolls on contact with the operator, if a barrier guard interferes with machine operation.
2) Provide a stopping device for hoppers.
   - Provide an automatic “stop” bar or stopping device along the back edge of the hopper.
     - If machine construction doesn't allow for this, place the bar or device where it will be most effective.

WAC 296-806-42582

Provide proper enclosures for sifters

You must

- Make sure enclosures on flour sifters:
  - Are dust-tight
  - Allow for ease of interior inspection

Food Processing Equipment

WAC 296-806-425

Rule

WAC 296-806-42584

Follow these requirements for sugar and spice pulverizers

You must

1) Remove static electricity by grounding all drive belts used in sugar and spice pulverizers by using metal combs.
2) Follow the National Fire Protection Association (NFPA) 61-1999, Standard for Pulverizing Sugar and Spice Grinding, in order to prevent fires and dust explosions in agricultural and food products facilities.
3) Provide magnetic separators to reduce fire and explosion hazards.

Forging Machines

WAC 296-806-430

Summary

• If your specific machine or operation isn't listed here, then follow any general requirements in this section along with the "Requirements for All Machines" found in this chapter, WAC 296-806-200 and WAC 296-806-300.

The requirements in this section apply to machines used in the forming of hot metal, such as hot trimming presses, forging hammers, hot forging presses, upsetters, hot bending and hot metal presses, and equipment used in boltheading and rivet making, as well as other forging equipment. For specific forging machine requirements, see Table 430-1.

Exemption:

- This section doesn't apply to cold forging operations.

YOUR RESPONSIBILITY:

To make sure all forging and associated equipment in your workplace are constructed, operated, and maintained in a safe manner

You must

GENERAL REQUIREMENTS FOR FORGING MACHINES

Follow these safety requirements when using lead and lead casts
WAC 296-806-43002 430-4

Properly inspect and maintain forging equipment
WAC 296-806-43004 430-5

Use safety blocks on hammers and presses
WAC 296-806-43006 430-5

Make sure tongs meet these requirements
WAC 296-806-43008 430-7

Forging Machines

WAC 296-806-430

Summary

Protect employees when removing scale
WAC 296-806-43010 430-8

Provide adequate foundations for hammers and presses
WAC 296-806-43012 430-8

Follow these requirements for manually operated valves and switches
WAC 296-806-43014 430-9

HAMMERS

Use die keys and shims made of proper-grade metal
WAC 296-806-43016 430-10

Provide a safety cylinder head
WAC 296-806-43018 430-10

Provide a shutoff valve
WAC 296-806-43020 430-11

Provide a means for cylinder draining
WAC 296-806-43022 430-11

Follow these requirements for pressure pipes
WAC 296-806-43024 430-12

Follow these requirements when using board hammers
WAC 296-806-43026 430-12

OTHER FORGE FACILITY EQUIPMENT

Protect against sparks from saws
WAC 296-806-43028 430-13

Table 430-1
Specific Requirements for Forging Machines

	Steam Hammers	Airlift Hammers	Board Hammers	Saws
WACs needed in addition to those included under "General Requirements for Forging Machines"				
WAC 296-806-43016 Use die keys and shims made of proper-grade material	x	x		
WAC 296-806-43018 Provide a safety cylinder head	x	x		
WAC 296-806-43020 Provide a shutoff valve	x	x		
WAC 296-806-43022 Provide a means for cylinder draining	x	x		
WAC 296-806-43024 Follow these requirements for pressure pipes	x	x		
WAC 296-806-43026 Follow these requirements when using board hammers			x	
WAC 296-806-43028 Protect against sparks from saws				x

Rule

GENERAL REQUIREMENTS FOR FORGING

WAC 296-806-43002

Follow these safety requirements when using lead and lead casts

You must

1) Provide thermostats for heating elements to prevent overheating.
2) Provide a means of exhaust for fixed or permanent lead pot installations.
3) Provide a covered container to store dross skimmings.
4) Keep equipment clean, especially from accumulations of yellow lead oxide.

Reference:

- For requirements about Personal Protective Equipment (PPE), see the Safety and Health Core Rules, WAC 296-800-160.
- For ventilation requirements when using portable lead pot units, see the General Occupational Health Standards, Chapter 296-62 WAC.

WAC 296-806-43004

Properly inspect and maintain forging equipment

You must

- Keep all forge shop equipment in safe operating condition.
- Train personnel in proper inspection and maintenance procedures.
- Establish periodic and regular safety inspections.
- Schedule frequent and regular safety inspections of all guards and point of operation protection devices.
- Keep written records of safety inspections that include all of the following:
  - Date of the inspection
  - Signature of the person doing the inspection
  - Serial number or other identification for the piece of equipment inspected
- Safeguard all overhead machinery parts so they don't fly off or fall, if the equipment breaks.

WAC 296-806-43006

Use safety blocks on hammers and presses

You must

- Use safety blocks on hammers and presses when dies are being changed and maintenance or repair work is being done on the machine.
- Provide safety blocks or wedges that meet or exceed the specifications and dimensions shown in Table 430-2.

-Continued-

Rule

WAC 296-806-43006 (Continued)

Table 430-2
Strength and Dimensions for Wood Safety Blocks or Wedges

Size of timber inches using actual dimensions	4x4	6x6	8x8	10x10	12x12	
Square inches in cross section	16	36	64	100	144	
Miminum allowable crushing strength parallel to grain, p.s.i.	5,000	5,000	5,000	5,000	5,000	**Note:** Adapted from U.S. Department of Agriculture Technical Bulletin 479. Hardwoods recommended are those whose ultimate crushing strengths in compression parallel to grain are 5,000 p.s.i. (pounds per square inch) or greater.
Maximum static load within short column range	80,000	180,000	320,000	500,000	720,000	**Note:** Slenderness ratio formula for short columns is L/d=11, where L=length of timber in inches and d=least dimension in inches; this ratio should not exceed 11.
Safety factor	10	10	10	10	10	
Maximum recommended weight of forging hammer for timber used	8,000	18,000	32,000	50,000	72,000	
Maximum allowable length of timber in inches	44	66	88	100	132	

WAC 296-806-43008

Make sure tongs meet these requirements

You must

- Make sure tongs used with hammers, presses, upsetters, and forging equipment used in boltheading and rivet making, meet the following requirements:
  - They are long enough so the worker can use the tongs without standing behind them, in order to avoid injury, in case of kickback.
  - The handle ends aren't sharp.

Note:

- The worker should be instructed about proper body positions when using tongs.
- Tongs should be checked periodically to see that they remain at the proper hardness level for the job.
- Rings or equivalent devices that are used for locking tongs should be inspected periodically to make sure they are safe.

Rule

WAC 296-806-43010

Protect employees when removing scale

You must

- Protect employees at every hammer and press by:
  - Making sure they don't place a hand or arm between the dies by providing them with devices that reach the full length of the die when removing scale.
  - Examples include:
    - Oil swabs
    - Scale removers
    - Other devices that remove scale by reaching the full length of the die
    - Stopping flying scale through construction and arrangement of a scale guard that's of **substantial construction** at the back of every hammer and press.

WAC 296-806-43012

Provide adequate foundations for hammers and presses

You must

- Provide foundations adequate to support the imposed weight and normal work stress for hammers and presses.
  - Hammers and presses must remain on their foundations.

WAC 296-806-43014

Follow these requirements for manually operated valves and switches

You must

- Make sure all manually operated valves and switches are clearly identified and readily accessible for all of the following:
  - Presses
  - Upsetters
  - Forging equipment involved in boltheading and rivet making

Rule

HAMMERS

WAC 296-806-43016

Use die keys and shims made of proper-grade material

You must

- Make sure that die keys and shims are made from a grade of material that won't easily crack or splinter

Note:

➢ Die keys and shims shouldn't project more than 2 inches in front and 4 inches in back of the ram or die.

WAC 296-806-43018

Provide a safety cylinder head

You must

- Make sure that every steam, airlift, or air hammer has a safety cylinder head that acts as a cushion if the rod breaks or pulls out of the ram.

WAC 296-806-43020
Provide a shutoff valve

You must

- Provide each steam and airlift hammer with a quick-closing emergency valve in the admission pipeline that's distinctly marked and in a convenient location.
  - This valve needs to be closed and locked in the “off” position when the hammer is being adjusted, repaired, or serviced, or the dies are being changed.

Reference:

➢ For requirements about Lockout/Tagout (Control of Hazardous Energy), see Chapter 296-803 WAC.

WAC 296-806-43022
Provide a means for cylinder draining

You must

- Provide a means for draining cylinders on steam hammers.
- Provide airlift hammers with both main head and clamp cylinder drains.

Rule

WAC 296-806-43024

Follow these requirements for pressure pipes

You must

- Provide steam or air pressure piping on power-driven hammers that meets or exceeds the requirements in:
  - ANSI B31.1.0-1967, Power Piping, with addenda ANSI B31.1.06-1971, for hammers constructed before January 1, 2005.
  - ANSI B31.1.0-2001, Power Piping, with addenda ANSI B31.1.0A-2001, for hammers constructed on or after January 1, 2005.

WAC 296-806-43026

Follow these requirements when using board hammers

You must

- Securely fasten a suitable enclosure to gravity-dropped board hammers to prevent damaged or detached boards from falling.
- Properly secure all major assemblies and fittings that can loosen and fall.

OTHER FORGE FACILITY EQUIPMENT

WAC 296-806-43028

Protect against sparks from saws

You must

- Provide all saws with a sheet metal guard that is positioned to stop sparks.
  - The guard must be constructed of at least 1/8 inch sheet metal.

Note:

➢ It's advisable to provide all saws with a means to trap sparks below the saw and to use a tank of water below the saw to reduce the fire hazard.

Reference:

➢ Other saw requirements may be found in Saws and cutting heads, WAC 296-806-480.

Notes

Garbage (Waste) Disposals

WAC 296-806-435

Summary

• In addition to the requirements in this section, you need to refer to the following sections of this chapter in order to fully protect your employees from machine hazards: – Requirements for All Machines, WAC 296-806-200 and WAC 296-806-300

This section applies to the hazards associated with garbage (waste) disposals found in the workplace. These requirements are designed to protect employees from hazards associated with the point of operation and flying materials.

YOUR RESPONSIBILITY:

To protect employees from hazards associated with garbage (waste) disposals

You must

Safeguard garbage (waste) disposal equipment
WAC 296-806-43502 435-2

Garbage (Waste) Disposals

WAC 296-806-435

Rule

WAC 296-806-43502

Safeguard garbage (waste) disposal equipment

You must

1) Protect employees exposed to the hazards of screw conveyor disposals with a properly designed and mounted trimboard cover that remains in place during operation.

2) Provide guarding to protect employees from contact with knives or blades of disposal units.
   - The guards need to be strong enough so that an employee's downward thrusting motion won't cause the guard material to open larger than 2 inches.

Reference:

➢ You may need to follow additional requirements found in Make sure guards meet these requirements, WAC 296-806-20042, to keep employees from contacting the knives or blades of disposals.

Glue Spreaders

WAC 296-806-440

Summary

• In addition to the requirements in this section, you need to refer to the following sections of this chapter in order to fully protect your employees from machine hazards: – Requirements for All Machines, WAC 296-806-200 and WAC 296-806-300

This section applies to safeguarding and emergency controls used to protect employees from the hazards associated with cleaning and operating glue spreaders.

YOUR RESPONSIBILITY:

To protect employees from hazards associated with glue spreaders

You must

Provide guards and automatic shut-offs on glue spreaders
WAC 296-806-44002. 440-2

Rule

WAC 296-806-44002

Provide guards and automatic shut-offs on glue spreaders

You must

- Enclose the in-running side of glue spreaders, leaving enough space to insert stock.
- Provide an emergency stop control, such as a panic bar or similar device, that can be reached from the infeed and outfeed sides of the spreader to shut off the power in an emergency.

Note:

➢ You may need 2 controls to reach the emergency stop control from both the infeed and outfeed sides

Ironworkers

WAC 296-806-445

Summary

- In addition to the requirements in this section, you need to refer to the following sections of this chapter in order to fully protect your employees from machine hazards:
  - Requirements for All Machines, WAC 296-806-200 and WAC 296-806-300

This section applies to the hazards associated with hydraulic and mechanical ironworkers.

YOUR RESPONSIBILITY:

To protect employees from hazards associated with ironworkers

You must

Safeguard ironworkers point of operation
WAC 296-806-44502 445-2

Follow these requirements for adjustable restrictors when safeguarding ironworkers
WAC 296-806-44504 445-2

Rule

WAC 296-806-44502

Safeguard ironworkers point of operation

You must

- Safeguard the different operating stations on ironworkers according to Requirements for All Machines, Safeguarding Methods, WAC 296-806-20042 through 296-806-20058.

Exemption:

- If the point of operation opening is ¼ inch or less, safeguarding isn't required

WAC 296-806-44504

Follow these requirements for adjustable restrictors when safeguarding ironworkers

You must

- Use adjustable restrictors for safeguarding only when guards, devices, or awareness barriers aren't feasible.

Lathes

WAC 296-806-450

Summary

• In addition to the requirements in this section, you need to refer to the following sections of this chapter in order to fully protect your employees from machine hazards: – Requirements for All Machines, WAC 296-806-200 and WAC 296-806-300

This section applies to the hazards associated with metal and woodworking lathes.

YOUR RESPONSIBILITY:

To protect employees from hazards associated with metal and woodworking lathes

You must

METAL LATHES

Provide shields or guards on metal lathes for chip or coolant hazards
WAC 296-806-45002 450-3

Safeguard work-holding devices (chucks)
WAC 296-806-45004 450-3

Follow these requirements for chip control and handling
WAC 296-806-45006 450-4

Safeguard power-clamping devices
WAC 296-806-45008 450-4

Restrain extended workpieces on horizontal lathes
WAC 296-806-45010 450-5

Lathes

WAC 296-806-450

Summary

WOODWORKING LATHES

Guard cutting heads on profile and swing-head lathes
WAC 296-806-45012 450-6

Guard cutting heads on turning lathes
WAC 296-806-45014 450-6

Guard automatic turning lathes
WAC 296-806-45016 450-7

Guard wood lathes used for turning long pieces of stock
WAC 296-806-45018 450-7

METAL LATHES

WAC 296-806-45002

Provide shields or guards on metal lathes for chip or coolant hazards

You must

- Provide a shield or other equally effective guard to prevent chips or coolant from being thrown or splashed on the operator, aisle, or other assigned work area, when exposed to these hazards.
  - Examples of guards include permanent chip and coolant shields.

WAC 296-806-45004

Safeguard work-holding devices (chucks)

You must

- Provide a fixed or movable guard, device, awareness barrier, or peripheral cover over areas exposed to the operator on work-holding devices or chucks when:
  - It's in the clamped mode and has parts that extend beyond the outside diameter of the holding device
  - It has an irregular shape to the periphery of its body

Rule

WAC 296-806-45006

Follow these requirements for chip control and handling

You must

- Make sure employees' hands don't contact chips that are being generated, such as long stringy chips.

Note:

➢ Chips may be removed by using things such as tools, pullers, brushes, and shovels.

WAC 296-806-45008

Safeguard power-clamping devices

You must

- Protect the operator from the hazards of thrown material when the clamping device doesn't have adequate pressure to hold the material.

Note:

➢ Examples of safeguarding methods include:
  - Interlocks
  - Retaining covers:
    - That contain the workpiece if it falls or flies out from the clamped work-holding device.
  - Visual or audible warnings:
    - That are located so they can be seen or heard by the operator in the normal work area, making the operator aware that there's no pressure on the clamp side of the actuator.

WAC 296-806-45010

Restrain extended workpieces on horizontal lathes

You must

- Safeguard employees from the hazards of workpieces that extend beyond the edges of the horizontal lathe by:
  - Restraining workpieces as needed to prevent whipping
    and
  - Isolating workpieces with an awareness barrier, fixed or movable guard, or railing.

Rule

WOODWORKING LATHES

WAC 296-806-45012
Guard cutting heads on profile lathes and swing-head lathes

You must

- Cover all cutting heads on profile lathes, swing-head lathes, and heel-turning machines with a metal guard.
- Make sure guards are made of:
  - Sheet metal at least 1/16 inches thick
  - Cast iron at least 3/16 inches thick

WAC 296-806-45014
Guard cutting heads on turning lathes

You must

- Install hoods or shields that cover as completely as possible all cutting heads, whether or not they rotate.

Note:

➢ The hood or shield should be hinged to the machine so it can be moved to make adjustments.

WAC 296-806-45016

Guard automatic turning lathes

You must

- Install hoods that completely enclose the cutter blades, except at contact points where stock is being cut, on the following types of machines:
  - Shoe last and spoke lathes
  - Doweling machines
  - Heel-turning machines
  - Automatic turning lathes with rotating knives

WAC 296-806-45018

Guard wood lathes used for turning long pieces of stock

You must

- Install long, curved guards extending over lathe tops where workpieces are held only between the 2 centers, to prevent stock from being thrown out of the machine.

Notes

Mechanical Power Presses

WAC 296-806-455

Summary

- In addition to the requirements in this section, you need to refer to the following sections of this chapter in order to fully protect your employees from machine hazards:
  - Requirements for All Machines, WAC 296-806-200 and WAC 296-806-300

This section applies to mechanically powered machines that transmit force to cut, form, or assemble metal or other materials through tools or dies attached to or operated by slides.

Exemption:

- This section doesn't apply to:
  - Power press brakes
  - Hydraulic power presses
  - Pneumatic power presses
  - Slow-acting horizontal mechanical presses with large beds (bulldozers)
  - Hot bending and hot metal presses
  - Forging presses and hammers
  - Riveting machines
  - Cold headers and cold formers
  - Eyelet machines
  - High energy rate presses
  - Ironworkers and detail punches
  - Metal shears
  - Powdered metal presses
  - Press welders
  - Turret and plate punching machines
  - Wire termination machines
  - Welding presses

Mechanical Power Presses

WAC 296-806-455

Summary

Reference:

- See Forging Machines for forging press and hammer requirements, WAC 296-806-430.
- See Ironworkers for requirements for ironworkers, WAC 296-806-445.
- See Press Brakes for power press brake requirements, WAC 296-806-465.

YOUR RESPONSIBILITY

To make sure mechanical power presses meet the requirements of this section

You must

DESIGN AND CONSTRUCTION

Make sure mechanical power presses are properly designed and constructed
WAC 296-806-45502 455-5

SAFEGUARDING

Safeguard presses that use unitized tooling
WAC 296-806-45504 455-6

Protect operators from guidepost hazards
WAC 296-806-45506 455-6

Safeguard the point of operation
WAC 296-806-45508 455-7

Make sure point-of-operation guards are properly designed and constructed
WAC 296-806-45510 455-8

Make sure barrier guards used to safeguard the point of operation meet these requirements
WAC 296-806-45512 455-9

Summary

Make sure point-of-operation devices are effective
WAC 296-806-45514 455-10

Make sure presence-sensing devices used to safeguard the point of operation meet these requirements
WAC 296-806-45516 455-11

Make sure pull-back devices used to safeguard the point of operation meet these requirements
WAC 296-806-45518 455-13

Make sure restraint (holdout) devices used to safeguard the point of operation meet these requirements
WAC 296-806-45520 455-14

Make sure two-hand control devices used to safeguard the point of operation meet these requirements
WAC 296-806-45522 455-15

Make sure two-hand trip devices used to safeguard the point of operation meet these requirements
WAC 296-806-45524 455-16

Provide additional safeguards when the operator puts one or both hands into the point of operation
WAC 296-806-45526 455-17

OPERATIONS

Establish die setting procedures
WAC 296-806-45528 455-19

Handle dies safely
WAC 296-806-45530 455-20

Protect die setters during setup and tryout
WAC 296-806-45532 455-20

Mechanical Power Presses

WAC 296-806-455

Summary

Train press operators
WAC 296-806-45534 455-21

Operate mechanical power presses safely
WAC 296-806-45536 455-21

Provide tools and other means to protect press operators
WAC 296-806-45538 455-22

Inspect and maintain presses
WAC 296-806-45540 455-23

Make sure presses and operating practices used in the PSDI mode of operation meet these requirements
WAC 296-806-45542 455-24

DESIGN AND CONSTRUCTION

WAC 296-806-45502

Make sure mechanical power presses are properly designed and constructed

You must

- Make sure mechanical power presses manufactured **before** January 1, 2005, meet the requirements of American National Standards Institute (ANSI) B11.1-1971, Safety Requirements for the Construction, Care, and Use of Mechanical Power Presses.
- Make sure mechanical power presses manufactured, reconstructed, or modified **on or after** January 1, 2005, meet the requirements of ANSI B11.1-2001, Safety Requirements for Mechanical Power Presses.

Rule

SAFEGUARDING

WAC 296-806-45504
Safeguard presses that use unitized tooling

You must

- Safeguard the opening between the top of the punch holder and the face of the slide or striking pad by using properly installed, adjusted, and maintained guards or devices.

WAC 296-806-45506
Protect operators from guidepost hazards

You must

- Use properly installed, adjusted, and maintained guards or devices to protect operators from the hazards created by:
  - Guideposts separating from their bushings
  - Similar pinch points between the slide (moving die) and fixed die or press attachments

Exemption:

- This requirement doesn't apply if the opening is ¼ inch or less, before use.

WAC 296-806-45508

Safeguard the point of operation

You must

- Protect employees from point-of-operation hazards by using properly installed, adjusted, and maintained guards or devices.

Exemption:

- This requirement doesn't apply if the point-of-operation opening is ¼ inch or less, before use.

Note:

- You may use a combination of guards and devices as long as employees are completely protected from point-of-operation hazards.
- Hand tools used for placing materials into the press, or removing them from the press, aren't a substitute for point-of-operation guards or devices.

Rule

WAC 296-806-45510

Make sure point-of-operation guards are properly designed and constructed

You must

- Make sure each guard:
  - Prevents the operator's hands or other body parts from reaching through, over, under, or around the guard into the point of operation.
  - Has no opening larger than the maximum permissible openings shown in Table 200-1, Largest Allowable Guard Openings, WAC 296-806-20042.
  - Doesn't create a pinch point between the guard and moving machine parts.
  - Uses fasteners that can't be easily removed by the operator.
  - Is easy to inspect.
  - Provides the best view of the point of operation for the type of work.

WAC 296-806-45512

Make sure barrier guards meet these requirements

You must

- Make sure a fixed barrier guard is attached to a fixed surface such as the stripper, die shoe, press frame, or bolster plate.
- Make sure the interlocked barrier guard:
  - Is attached to a fixed surface such as the press frame or bolster plate
  - Prevents cycling (stroking) of the press when the interlocked section of the guard isn't in the protecting position
  - Can't open until hazardous motion of the slide has stopped
- Not use the hinged or movable sections of an interlocked barrier guard for manual feeding.
- Make sure an adjustable barrier guard is:
  - Attached to a fixed surface such as the press frame, bolster plate, or die shoe
  - Adjusted only by authorized persons who can apply Table 200-1, Largest Allowable Guard Openings, WAC 296-806-20042.

Reference:

➢ See, Provide additional safeguards when the operator puts one or both hands into the point of operation, WAC 296-806-45526, for additional safeguards that are required if the operator puts one or both hands into the point of operation to feed or remove parts, and the point of operation is protected by a Type B gate or movable barrier device.

Rule

WAC 296-806-45514

Make sure point-of-operation devices are effective

You must

- Make sure point-of-operation devices protect the operator from hazards as shown in Table 455-1, Point-of-Operation Devices.
- Make sure the motor start button is protected against accidental contact.

Table 455-1
Point-of-Operation Devices

Type of Device	Type of Operator protection that must be provided
Presence-sensing device (part-revolution clutch press)	If the operator's hands or other body part are in the point of operation: • Prevents initiating a press cycle (stroke) **or** • Stops the press during the closing portion of the cycle (stroke)
Presence-sensing device (full-revolution clutch press)	Do **not** use for point-of-operation safeguarding
Pull-back device	As the die closes: • Withdraws the operator's hands if they are located in the point of operation **or** • Prevents the operator from reaching into the point of operation
Restraint (holdout) device	Prevents the operator from reaching into the point of operation at all times
Two-hand control device Two-hand trip device	• Requires operators to use both hands to activate controls that are far enough away from the point of operation so the slide completes the closing portion of the cycle (stroke) or stops before they can reach into the point of operation
Type A gate or movable barrier device	Encloses the point of operation: • Before a press cycle (stroke) can be initiated **and** • Remains closed until slide motion has stopped
Type B gate or movable barrier device	Encloses the point of operation: • Before a press cycle (stroke) can be initiated **and** • Remains closed until slide motion has stopped during the closing portion of the cycle (stroke)
Sweep device	Do **not** use for point-of-operation safeguarding

WAC 296-806-45516

Make sure presence-sensing devices used to safeguard the point of operation meet these requirements

You must

- Make sure the presence-sensing device is interlocked into the control circuit to prevent or stop slide motion if the operator's hand or other body part is within the sensing field of the device during the down stroke of the press slide.
- Make sure muting of the device is done only during the upstroke of the press slide.
- Make sure failure of **any** component of the device:
  - Doesn't prevent normal stopping action of the press
  - Prevents initiation of another cycle (stroke) until corrected
  - Is indicated by the system
- Use guards to protect all areas of entry to the point of operation not protected by the presence-sensing device.
- Make sure the sensing field of the device is located farther from the point of operation than the minimum safety distance as determined by the following formula:

D = 63 X T

Where:
D = minimum safety distance (in inches)
T = stopping time of the press measured at approximately the 90 degree position of crankshaft rotation (in seconds)

Rule

WAC 296-806-45516 (Continued)

Example:

The number in the formula represents the hand speed of the operator (63 inches per second). If your press has a stopping time of 1/2 seconds (.5 seconds), the calculations would be:

D = 63 X .5 = 31.5

The sensing field would need to be at least 31-½ inches from the point of operation.

Reference:

- See, Provide additional safeguards when the operator puts one or both hands into the point of operation, WAC 296-806-45526, while feeding or removing parts, for additional safeguards that are required if the operator puts one or both hands into the point of operation to feed or remove parts, and the point of operation is protected by a presence-sensing device.

WAC 296-806-45518

Make sure pull-back devices used to safeguard the point of operation meet these requirements

You must

- Make sure presses requiring more that one operator have a separate pull-back device for each operator.
- Make sure each pull-back device has attachments:
  - For each of the operator's hands
  - That are connected to and operated only by the press slide or its attached die
  - That are adjusted to either:
    - Prevent the operator from reaching into the point of operation
      or
    - Withdraw the operator's hands from the point of operation before the dies close
- Check each pull-back device that's being used for proper adjustment at these times:
  - At the start of each operator shift
  - After a new die set-up
  - When operators are changed
- Complete necessary maintenance or repair work before operating the press.

Reference:

➢ For recordkeeping requirements for maintenance or repair work, see Inspect and maintain presses, WAC 296-806-45540.

Rule

WAC 296-806-45520

Make sure restraint (holdout) devices used to safeguard the point of operation meet these requirements

You must

- Make sure presses requiring more than one operator have separate restraint devices for each operator.
- Make sure each restraint device has attachments:
  - For each of the operator's hands
  - That are securely anchored
  - That are adjusted so the operator can't reach into the point of operation

WAC 296-806-45522

Make sure two-hand control devices used to safeguard the point of operation meet these requirements

You must

- Make sure presses that require more than one operator:
  - Have separate two-hand controls for each operator
  - Need concurrent application of all operators' controls to activate the slide
- Make sure the slide stops if any operator's hand is removed from a control button.
- Make sure two-hand controls are fixed in position and can be moved only by authorized persons.
- Make sure the controls are located farther from the point of operation than the minimum safety distance as determined by the following formula:

D = 63 X T

Where:
D = minimum safety distance (in inches)
T = stopping time of the press measured at approximately the 90 degree position of crankshaft rotation (in seconds)

Example:

The number in the formula represents the hand speed of the operator (63 inches per second). If your press has a stopping time of $^1/_2$ second (.5 second), the calculations would be:

D = 63 X .5 = 31.5

The sensing field would need to be at least 31-½ inches from the point of operation.

Reference:

➢ See Provide additional safeguards when the operator puts one or both hands into the point of operation, WAC 296-806-45526, for additional required safeguards.

Rule

WAC 296-806-45524

Make sure two-hand trip devices used to safeguard the point of operation meet these requirements

You must

- Make sure presses requiring more than one operator:
  - Have separate two-hand trips for each operator
  - Need concurrent application of all operators' controls to activate the slide
- Make sure the two-hand trips are fixed in position and can be moved only by authorized persons.
- Make sure the controls are located farther from the point of operation than the minimum safety distance as determined by the following formula:

D = 63 X T

Where:
D = minimum safety distance (in inches)
T = the maximum time the press takes for the die to close after the press has been tripped (in seconds)

Example:

The number in the formula represents the hand speed of the operator (63 inches per second). If your press has a die closing time of $^{1}/_{2}$ second (.5 second), the calculations would be:

D = 63 X .5 = 31.5

The trip device would need to be at least 31½ inches from the point of operation.

WAC 296-806-45526

Provide additional safeguards when the operator puts one or both hands into the point of operation

IMPORTANT:

- This rule applies when the operator puts one or both hands into the point of operation to feed or remove parts, and the point of operation is protected by any of the following:
  - Presence-sensing device
  - Two-hand control
  - Type B gate or movable barrier device

You must

- Make sure the press has both a:
  - Stopping-performance monitor (previously called brake-system monitor) **and**
  - Control system that monitors the performance of safety-related functions (previously called control reliability)
- Make sure the stopping-performance monitor meets the requirements of:
  - American National Standards Institute (ANSI) B11.1-1982, Mechanical Power Presses - Safety Requirements for Construction, Care, and Use for presses manufactured **before** January 1, 2005
  - ANSI B11.1-2001, Safety Requirements for Mechanical Power Presses for presses manufactured **on or after** January 1, 2005

Rule

WAC 296-806-45526 (Continued)

You must

- Make sure the control system monitors the performance of safety-related functions so that failure of any component in the control system:
  - Doesn't prevent normal stopping action of the press
  - Prevents initiation of another cycle (stroke) until the failure is corrected
  - Can be detected by a simple test or is indicated by the control system

Exemption:

- This requirement doesn't apply to control system components that don't affect protection from point-of-operation hazards.

Definition:

The *control system* includes the sensors, manual input and mode selection elements, interlocking and decision-making circuitry, and output elements of the press-operating devices and mechanisms.

OPERATIONS

WAC 296-802-45528
Establish die setting procedures

You must

- Develop and use procedures to protect employees from the hazards of die setting.
- Make sure die setters are provided with at least the following information:
  - Rated press capacity requirements for the die
  - Weight of the upper die and other slide attachments required for job setup and setting counterbalance air pressure
  - Total die weight

Note:

➢ This information may be stamped on the die or kept in a file that's readily available to the die setters.

Rule

WAC 296-802-45530

Handle dies safely

You must

- Make sure dies requiring mechanical handling have handling equipment attachment points.
- Use die stops or other means to prevent losing control of the die while setting or removing dies from presses that are inclined.
- Make sure the upper and lower shoes will securely mount the die to the bolster and slide.
- Use additional means of securing the upper shoe to the slide where clamp caps or set screws are used in conjunction with punch stems.
- Make sure spring- loaded turnover bars are provided for presses designed to accept them.

WAC 296-802-45532

Protect die setters during setup and tryout

You must

1) Use safety blocks when an employee has to put their hands or other body part into the point of operation to adjust or repair dies.
2) Protect die setters doing die tryout from point-of-operation hazards by **at least one** of the following:
    - Properly installed, adjusted, and maintained guards or devices
    - Proper use of INCH mode (part-revolution clutch press)
    - Proper use of JOG mode (full-revolution clutch press)

WAC 296-806-45534

Train press operators

You must

1) Train operators to safely operate the press.
2) Make sure modified or reconstructed presses have instructions to establish new or changed guidelines for use and care of the press.

WAC 296-806-45536

Operate mechanical power presses safely

You must

- Operate the press within the manufacturer's rated capacities.

Note:

➢ Rated capacities include, but aren't limited to:
- Structural capacity
- Torque capacity
- Energy capacity
- Thermal capacity
- Attachment weight
- Die shutheight

Rule

WAC 296-806-45538

Provide tools and other means to protect press operators

You must

- Make sure hand tools are provided and used to free and remove workpieces or scrap stuck in the die.
- Provide means for handling scrap from roll feed or random length stock operations.
- Provide and use means to keep operators and die setters from reaching into the point of operation or other hazard area to lubricate material or die components.

Note:

- Means for lubricating include, but aren't limited to:
  - Brushes
  - Swabs
  - Lubricating rolls
  - Manual spray systems
  - Automatic spray systems
- Handles on brushes or swabs should be long enough to keep persons using them clear of the point of operation.

WAC 296-806-45540

Inspect and maintain presses

You must

1) Make sure maintenance personnel are trained and competent to inspect and maintain power presses.
2) Keep records of all maintenance or repair work.
3) Inspect and test the following press systems **at least** weekly:
   - Clutch/brake mechanism
   - Antirepeat feature
   - Single stroke mechanism
   - Keep records of inspections and tests

Exemption:

- You don't have to do weekly inspections if your press has both:
  - Performance of safety-related functions monitoring (previously called control reliability)
    and
  - A stopping-performance monitor (previously called brake-system monitor) doesn't require weekly inspections

Reference:

➢ For requirements for these monitoring devices, see Provide additional safeguards when the operator puts one or both hands into the point of operation, WAC 296-806-45526.

Rule

WAC 296-806-45542

Make sure presses and operating practices used in the PSDI (Presence Sensing Device Initiation) mode of operation meet these requirements

You must

- Make sure presses and operating practices used in the PSDI mode meet the requirements of 29 CFR 1910.217(h), Presence Sensing Device Initiation (PSDI).

Note:

➢ 29 CFR 1910.217(h) contains requirements for certification and validation of mechanical power presses used in the PSDI mode of operation.

Mills

WAC 296-806-460

Summary

• In addition to the requirements in this section, you need to refer to the following sections of this chapter in order to fully protect your employees from machine hazards: – Requirements for All Machines, WAC 296-806-200 and WAC 296-806-300

This section applies only to mills in the rubber and plastics industry that have in-running metal rolls that are set horizontally and run toward each other.

YOUR RESPONSIBILITY:

To protect employees from hazards associated with mills

You must

Meet height requirements for mill rolls
WAC 296-806-46002 460-2

Provide mill safety controls
WAC 296-806-46004 460-3

Follow these stopping limit requirements for mills
WAC 296-806-46006 460-4

Rule

WAC 296-806-46002

Meet height requirements for mill rolls

You must

- Make sure that the tops of mill rolls installed after August 27, 1971, are at least 50 inches above the working level where the operator stands.
  - This distance applies to the actual working level, which could be:
    - The general floor level
    - In a pit
    - On a platform

WAC 296-806-46004

Provide mill safety controls

Exemption:

- These rules don't apply to mills if the machinery is permanently set up so employees:
  - Can't reach through, over, under, or around to come in contact with the roll bite
    or
  - Can't be caught between a roll and nearby objects

You must

1) Provide a safety trip control that's easy to reach, operates readily on contact, and is located in front and back of each mill. Each safety trip control must include at least one of the following:
   - Pressure-sensitive body bars that:
     - Are installed at the front and back of mills having a 46 inch roll height or over
     - Operate readily on contact from the pressure of the mill operator's body
   - Safety trip rods that are:
     - Installed in the front and back of each mill and located within 2 inches of the front and rear rolls
     - Installed so the top rods are no more than 72 inches above the level where the operator stands
     - Easy to reach and operate when the rods are pushed or pulled

-Continued-

Rule

WAC 296-806-46004 (Continued)

- Safety tripwire cables or wire center cords that are:
  - Installed in the front and back of each mill
  - Located within 2 inches of the face of the rolls
  - Installed so that cables are no more than 72 inches above the level where the operator stands
  - Easy to operate whether pushed or pulled

2) Make sure that all auxiliary equipment such as mill dividers, support bars, spray pipes, feed conveyors, and strip knives don't interfere with safety devices

WAC 296-806-46006

Follow these stopping limit requirements for mills

You must

- Make sure that mills are stopped within 1½ percent of the fastest speed at which they operate when empty
  - When mills operate at more than 250 feet per minute, stopping distances above 1½ percent of their fastest speed are allowed, but must have engineering support

Helpful Tool:

Mills Stopping Chart

You can find a copy of a mill stopping chart in the Resources section of this chapter.

Press Brakes

WAC 296-806-465

Summary

If your specific machine or operation isn't listed here, then follow any general requirements in this section along with the "Requirements for All Machines" found in this chapter, WAC 296-806-200 and WAC 296-806-300.

This section applies to all machines classified as power press brakes. Power press brakes use a ram and bed to bend material.

YOUR RESPONSIBILITY:

To protect employees from hazards associated with power press brakes

You must

GENERAL REQUIREMENTS FOR PRESS BRAKES

Provide auxiliary safety aids
WAC 296-806-46502 465-3

Safeguard the point of operation on press brakes
WAC 296-806-46504 465-3

SAFE DISTANCE SAFEGUARDING

Follow this requirement when using safe distance safeguarding
WAC 296-806-46506 465-4

Develop a safe distance safeguarding program
WAC 296-806-46508 465-5

Follow these requirements for safe distance training
WAC 296-806-46510 465-5

Require safe distance retraining
WAC 296-806-46512 465-6

Press Brakes

WAC 296-806-465

Summary

Conduct periodic safe distance inspections
WAC 296-806-46514 465-7

Supervise the safe distance program
WAC 296-806-46516 465-8

GENERAL REQUIREMENTS FOR PRESS BRAKES

WAC 296-806-46502
Provide auxiliary safety aids on press brakes

IMPORTANT:
This rule applies if the safeguarding method prevents the operator from holding the workpiece during the closing of the stroke.

You must

- Provide one of the following auxiliary safety aids that will allow operators to remove their hands from the work during the closing of the stroke:
  - Work supporting devices
  - Magnetic material-position gages

WAC 296-806-46504
Safeguard the point of operation on press brakes

You must

- Safeguard the point of operation on press brakes by at least one of the following:
  - Physical guards
  - Devices
  - ¼ inch maximum die opening

-Continued-

Rule

WAC 296-806-46504 (Continued)

– Safe Distance Safeguarding if **all** of the following apply:
  - Physical barriers and devices such as two-hand controls, holdouts, restraints, and presence sensors, are demonstrated to not be feasible.
  - This safeguarding method is only for one-time fabrication, custom-made parts, or small quantity runs of no more than 4 hours per month.
  - A safety program is provided that includes safe work procedures, training, and supervision to make sure work is performed using safe distance measures
  - There is no workplace record of injuries from failing to maintain a safe distance.

SAFE DISTANCE SAFEGUARDING

WAC 296-806-46506

Follow this requirement when using safe distance safeguarding

You must

- Make sure employees position themselves no closer than necessary and never closer than 4 inches from the power press brake point of operation.

WAC 296-806-46508

Develop a safe distance safeguarding program for press brakes

You must

- Develop, document, and use an effective safe distance safeguarding program
  - Include methods for maintaining the minimum safe distance requirements in Follow this requirement when using safe distance safeguarding, WAC 296-806-46506.

WAC 296-806-46510

Follow these requirements for safe distance training for press brakes

You must

1) Train your employees in the safe distance safeguarding program and include **all** of the following:
   - The need for safety awareness between the power press brake operator and, when required, the helper.
   - The purpose and function of operating controls, operating mode controls, die space height adjustment positions, and other brake controls.
   - The hazards of placing any parts of the body into the point of operation
   - The hazards related to each specific workpiece bending operation
   - The purpose and function of hand-feeding tools
   - The dangers of unsafe work practices, inattention, horseplay, and misuse of equipment
   - The importance of reporting unsafe conditions immediately to the supervisor

-Continued-

Rule

WAC 296-806-46510 (Continued)

You must

2) Make sure employees are proficient in safe distance safeguarding after training, and follow both:
   - Safe-operating instructions and recommendations of power press brake manufacturers
     and
   - Industry-recognized safe working practices for power press brakes

WAC 296-806-46512

Require safe distance retraining for press brake operations

You must

1) Require safe distance retraining when employees either:
   - Are seen operating the power press brake in an unsafe manner
     or
   - Fail to use safe distance procedures.
2) Require safe distance retraining when conditions in the workplace change that can affect safe operation of the power press brakes, such as introducing new or revised control methods and procedures.

WAC 296-806-46514

Conduct periodic safe distance inspections on press brakes

You must

1) Conduct periodic inspections of safe distance procedures at least annually to make sure that established procedures are being followed.
2) Make sure inspections are performed by a trained person who is **not** the person using the safe distance procedure.
3) You must identify **all** of the following during safe distance procedure inspections:
   - The date of the inspection
   - The person performing the inspection
   - The power press brake for which you are using the procedures
   - Any deviations or inadequacies with procedures and requirements.
   - Joint reviews with each trained employee about their responsibilities under the safe distance program.

Rule

WAC 296-806-46516

Supervise the safe distance program for press brakes

You must

- Provide adequate supervision to make sure that:
  - Only trained employees operate power press brakes
  - Employees use work practices learned in your training program
  - Periodic safe distance inspections are conducted as outlined in, Conduct periodic safe distance inspections on press brakes, WAC 296-806-46514
  - Any deviations from, or inadequacies in, program procedures or work practices are promptly corrected
  - Designated safeguarding means are used, installed, and functioning properly
  - Recommended hand-feeding tools are used, when needed
  - To require retraining and other appropriate corrective action when necessary.

Roll Forming and Bending Machines

WAC 296-806-470

Summary

• In addition to the requirements in this section, you need to refer to the following sections of this chapter in order to fully protect your employees from machine hazards: – Requirements for All Machines, WAC 296-806-200 and WAC 296-806-300

This section applies to power driven roll forming and bending machines that change the shape or the direction of materials by using rolls, rotary forming dies, and associated tooling.

YOUR RESPONSIBILITY:

To protect employees from hazards associated with roll-forming and bending machines

You must

Follow these requirements for machine initiation
WAC 296-806-47002 470-2

Safeguard nip points of roll-forming and bending machines
WAC 296-806-47004 470-2

Roll Forming and Bending Machines

WAC 296-806-470

Rule

WAC 296-806-47002

Follow these requirements for machine initiation

You must

- Make sure all of the following occur before starting machines:
  - Select “normal” operation mode
  - Safeguards are in place and functioning
  - No workers are within the hazard zones
  - Other proper work practices are followed.
- Make sure in the ”jog mode,” the machine function is initiated by the operator either:
  - During set-up
    or
  - By threading the material through the forming rolls.
- Make sure only assigned test employees perform machine testing and start-up.

WAC 296-806-47004

Safeguard nip points of roll-forming and bending machines

You must

- Safeguard in-running nip points on roll-forming and bending machines with **at least one** of the following:
  - A point-of-operation guard or device
  - An emergency stop device
    - A emergency stop device must be used when a point-of-operation guard or device isn't feasible.

Sanding Machines

WAC 296-806-475

Summary

- In addition to the requirements in this section, you need to refer to the following sections of this chapter in order to fully protect your employees from machine hazards:
  - Requirements for All Machines, WAC 296-806-200 and WAC 296-806-300

This section applies to sanding machines that remove material from stock with an abrasive sanding surface such as a belt, disk, or drum.

Exemption:

- This section doesn't apply to hand-held sanders. See, Portable Power Tools, Chapter 296-807 WAC, for requirements that apply to hand-held tools.

Reference:

- If you have multiple specific machines and operations in your workplace, you need to follow all requirements in WAC 296-806-400 that apply.
  - For example, if you use sanding machines and saws and cutting heads, you need to refer to both of these sections.
- In addition to the requirements in this section, you need to refer to the following sections of this chapter in order to fully protect your employees from machine hazards:
  - WAC 296-806-200, Requirements for all machines.
  - WAC 296-806-300, Requirements for machine parts.
- See chapter 296-807 WAC, Portable Power Tools, for requirements that apply to hand-held sanders.

-Continued-

Rule

WAC 296-806-475 (Continued)

YOUR RESPONSIBILITY:

To protect employees from hazards associated with drum, disk, and belt sanders

You must

Guard drum sanders
WAC 296-806-47502 475-3

Guard disk sanders
WAC 296-806-47504 475-3

Guard belt sanders
WAC 296-806-47506 475-4

Follow these requirements for feed roll guarding
WAC 296-806-47508 475-4

WAC 296-806-47502
Guard drum sanders

You must

- Make sure drum sanders have one of the following to enclose that part of the drum not used to work on the material:
  - Guard
  - Exhaust hood

Reference:

➢ Exhaust hoods are required on sanders when dust levels exceed exposure limits. For requirements about air contaminants, see Respiratory Hazards, Chapter 296-841 WAC.

Exemption:

- When a table's used for the application of material to be finished, you don't need to enclose the portion of the drum above the table that's necessary to do the work.

WAC 296-806-47504
Guard disk sanders

You must

- Make sure disk sanders have an exhaust hood, when required, or a guard that encloses the part of the disk not used to work on the material.

Exemption:

- When a table's used for the application of material to be finished, you don't need to enclose the portion of the disk above the table that's necessary to do the work.

Rule

WAC 296-806-47506

Guard belt sanders

You must

- Protect the operator by guarding:
  - Nip points where the sanding belt runs on the pulleys
  - The unused run of the sanding belt.

WAC 296-806-47508

Follow these requirements for feed roll guarding

You must

- Make sure that feed rolls have a hood or guard to prevent the operator's hands from coming in contact with the in-running rolls at any point
- Make sure that the guard meets **all** of the following:
  - Is constructed of heavy material, preferably metal
  - The bottom of the guard comes down to within $^3/_8$ inch of the plane formed by the bottom or working surfaces of the feed rolls
    - When the $^3/_8$ inch distance is increased to $^3/_4$ inch, the lead edge of the hood must be extended to $5^1/_2$ inches or more in front of the nip point between the front roll and the work.

Saws and Cutting Heads

WAC 296-806-480

Summary

- If your specific machine or operation isn't listed here, then be sure to follow any of the following requirements that apply:
  - General requirements for all saws and cutting heads in this section
  - General requirements for all saws in this section
  - General requirements for all cutting heads in this section
  - "Requirements for All Machines" found in this chapter, WAC 296-806-200 and WAC 296-806-300.

This section applies to fixed machines using saws or cutting heads that are used on any material.

Reference:

➢ For requirements on hand-held tools, see Portable Power Tools, Chapter 296-807 WAC.

YOUR RESPONSIBILITY:

To make sure machines using saws and cutting heads meet these requirements

GENERAL REQUIREMENTS FOR ALL SAWS AND CUTTING HEADS

You must

Protect employees using saws and cutting heads
WAC 296-806-48002 480-7

Make sure saws and cutting heads are sharpened and tensioned by qualified people
WAC 296-806-48004 480-7

Saws and Cutting Heads

WAC 296-806-480

Summary

SAWS

General requirements for all saws

Make sure saws are safe to use
WAC 296-806-48006 480-8

Requirements for all circular saws

Make sure all circular saws meet these requirements
WAC 296-806-48008 480-9

Make sure circular saw gages meet these requirements
WAC 296-806-48010 480-9

Guard hand-fed circular table saws
WAC 296-806-48012 480-10

Provide kickback protection for employees using hand-fed circular table ripsaws when ripping wood products
WAC 296-806-48014 480-12

Safeguard self-feed circular saws
WAC 296-806-48016 480-14

Provide kickback protection for self-feed circular ripsaws when ripping wood products
WAC 296-806-48018 480-14

Guard circular resaws
WAC 296-806-48020 480-15

Provide spreaders for circular resaws
WAC 296-806-48022 480-15

Summary

Requirements for Specific Circular Saws

Protect employees from automatic saw hazards
WAC 296-806-48024 480-16

Guard inverted swing (jump) saws
WAC 296-807-48026 480-16

Guard miter saws
WAC 296-806-48028 480-17

Guard radial saws
WAC 296-806-48030 480-19

Limit the travel of radial saws
WAC 296-806-48032 480-21

Provide kickback protection for radial saws when ripping wood
WAC 296-806-48034 480-22

Guard revolving double arbor saws
WAC 296-806-48036 480-24

Guard swing saws
WAC 296-806-48038 480-24

Limit the travel of swing saws
WAC 296-806-48040 480-25

Requirements for Band Saws and Drag Saws

Make sure bandsaws meet these requirements
WAC 296-806-48042 480-27

Protect employees from drag saw hazards
WAC 296-806-48044 480-28

Saws and Cutting Heads

WAC 296-806-480

Summary

CUTTING HEADS

General Requirements for All Cutting Heads

Maintain and balance knives and cutting heads
WAC 296-806-48046 480-29

Boring and mortising machines

Make sure boring and mortising machines meet these requirements
WAC 296-806-48048 480-30

Chipper and Hog Mills

Follow these requirements for chipper mills
WAC 296-806-48050 480-31

Follow these requirements for hog mills
WAC 296-806-48052 480-32

Protect employees from falling into chipper and hog mills
WAC 296-806-48054 480-32

Jointers

Make sure jointers with horizontal cutting heads meet these requirements
WAC 296-806-48056 480-33

Guard horizontal cutting heads on hand-fed jointers
WAC 296-806-48058 480-33

Guard vertical cutting heads on jointers
WAC 296-806-48060 480-34

Summary

Molding, Sticking and Matching Machines

Make sure molding, sticking and matching machines meet these requirements
WAC 296-806-48062 480-34

Panel Raisers and Other Similar Machines

Guard hand-fed panel raisers and other similar machines
WAC 296-806-48064 480-35

Planers

Make sure planers with a horizontal cutting head meet these requirements
WAC 296-806-48066 480-35

Guard planers
WAC 296-806-48068 480-36

Guard planer feed rolls
WAC 296-806-48070 480-36

Provide kickback protection on planers running stock of varied thickness
WAC 296-806-48072 480-37

Shapers

Make sure shapers meet these requirements
WAC 296-806-48074 480-38

Tenoning Machines

Guard tenoning machine feed chains and sprockets
WAC 296-806-48076 480-39

Guard tenoning machines
WAC 296-806-48078 480-39

Saws and Cutting Heads

WAC 296-806-480

Summary

Veneer Machinery

Guard veneer cutters and wringer knives
WAC 296-806-48080 480-40

Guard veneer clippers
WAC 296-806-48082 480-40

Follow these requirements for guarding guillotine cutters
WAC 296-806-48084 480-41

Provide mechanisms to stop power-driven guillotine cutters
WAC 296-806-48086 480-42

Prohibit riders on veneer slicer carriages
WAC 296-806-48088 480-42

GENERAL REQUIREMENTS FOR ALL SAWS AND CUTTING HEADS

WAC 296-806-48002

Protect employees using saws and cutting heads

You must

- Provide safeguarding to protect employees from the hazards of feed rolls.
- Provide types and sizes of push sticks or push blocks that are suitable for the work being done.
- Use a comb (featherboard) or a suitable jig to protect employees when a standard guard can't be used.

Note:

➢ Operations where you may need a comb or jig include:
- Dadoing
- Grooving
- Jointing
- Moulding
- Rabbeting

WAC 296-806-48004

Make sure saws and cutting heads are sharpened and tensioned by qualified people

You must

- Make sure people who sharpen or tension saw blades or cutters have demonstrated skill in this area.

Rule

GENERAL REQUIREMENTS FOR ALL SAWS

WAC 296-806-48006

Make sure saws are safe to use

You must

- Immediately remove from service a saw that has **any of the following** problems:
  - Cracked
  - Dull
  - Badly set
  - Improperly filed
  - Improperly tensioned
- Immediately clean any saw where gum has begun to stick on the sides.
- Eliminate unintended fence and table movement during operation.
- Keep hinged tables and fences firmly secured and in true alignment for all positions.

REQUIREMENTS FOR ALL CIRCULAR SAWS

WAC 296-806-48008

Make sure all circular saws meet these requirements

You must

- Protect employees from contacting the portion of the saw beneath or behind the table by covering it with either:
  - An exhaust hood, if one is required
    or
  - A guard
- Prohibit workers from inserting wedges between the saw disk and the collar to form a wobble saw.

WAC 296-806-48010

Make sure circular saw gages meet these requirements

You must

- Make sure circular saw gages slide in grooves or tracks that are accurately machined to maintain exact alignment with the saw for all positions of the guide.

Note:

➢ Circular saw gages are also referred to as miter or positioning gages.

Rule

WAC 296-806-48012

Safeguard hand-fed circular table saws

You must

- Guard each hand-fed circular saw with a hood that completely encloses both the portion of the saw that is above both:
  - The table
    and
  - The material being cut
- Make sure the hood is designed and constructed to do **all** of the following:
  - Protect the operator from flying splinters and broken saw teeth
  - Strong enough to resist damage from reasonable operation, adjustments, and handling
  - Made of material soft enough to not break saw teeth

Note:

➢ Hoods should be made of material that:
- Doesn't shatter when broken
- Isn't explosive
- Is less combustible than wood

You must

- Mount the hood so it does **all** of the following:
  - Operates positively and reliably
  - Maintains true alignment with the saw
  - Resists any side thrust or force that could throw it out of line

-Continued-

WAC 296-806-48012 (Continued)

You must

- Make sure the hood:
  - Allows the material to be inserted or sawed without any considerable resistance
    and
  - Does one of the following:
    - Automatically remains in contact with the material being cut
      or
    - Is manually adjusted to within 1/4 inch of the material being cut

Exemption:

➢ Saws may be guarded with a fixed enclosure, fixed barrier guard, or a manually adjusted guard when specific conditions prevent using a standard automatic adjusting guard. Alternative guards have to both:

- Provide protection equivalent to a standard automatic adjusting guard
  and
- Be used according to the manufacturer's instructions with sufficient supervision to comply with this requirement.

Rule

WAC 296-806-48014

Provide kickback protection for employees using hand-fed circular table ripsaws when ripping wood products

Definition:

Ripping is a sawing operation made:

- Through the thickness of the workpiece with the grain of natural wood
- Along the long dimension of a rectangular workpiece,
  and
- Usually parallel to that edge on reconstituted wood products.
- This can also be described as cutting stock to width. Two or more pieces result from the operation.

You must

- Provide a spreader or riving knife that's:
  - Made of hard-tempered steel or its equivalent
  - Thinner than the saw kerf
  - Wide enough to provide sufficient stiffness and rigidity to resist any reasonable side thrust or blow that could bend or throw it out of position
  - Attached so it remains in true alignment with the saw when the saw or table's tilted

Note:

➢ The spreader or riving knife should:
- Prevent material from either squeezing the saw or being thrown back at the operator.
- Be placed so there is 1/2 inch or less space between it and the back of the saw when the largest saw's mounted in the machine

-Continued-

WAC 296-806-48014 (Continued)

Exemption:

- You don't have to provide a spreader or riving knife when grooving, dadoing, or rabbeting. When you finish these operations, replace the spreader immediately.

You must

- Provide nonkickback fingers or dogs that are:
  - Located so they prevent the saw from either picking up the material or throwing the material back towards the operator
  - Designed to hold any thickness of material being cut.

Note:

➢ Kickbacks occur when a saw seizes the stock and hurls it back at the operator. This can happen when the stock twists and binds against the side of the blades or is caught in the teeth. Kickbacks occur more often when cutting parallel to the wood grain (ripping) than when cross cutting. Common contributors to kickbacks include:
  - A blade that isn't sharpened.
  - A blade set at an incorrect height.
  - Poor quality lumber, such as frozen lumber, lumber with many knots, or foreign objects, such as nails.

Rule

WAC 296-806-48016

Safeguard self-feed circular saws

You must

- Provide saws and feed rolls with a hood or guard to protect the operator from contacting the in-running rolls.
- Make sure the guard is constructed of heavy material, preferably metal.
- Make sure the distance between the bottom of the guard and the plane formed by the bottom or working surface of the feed rolls meets the requirements of Table 200-1, Largest Allowable Guard Opening, in WAC 296-806-20042.

WAC 296-806-48018

Provide kickback protection for self-feed circular ripsaws when ripping wood products

You must

- Provide saws with sectional nonkickback fingers that meet **all** of the following requirements:
  - They cover the full width of the feed roll
  - They are located in front of the saw
  - They are arranged so they keep continuous contact with the material being fed

WAC 296-806-48020
Guard circular resaws

You must

- Provide each circular resaw with a metal hood or shield that is:
  - Located above the saw
  - Designed to protect the operator from flying splinters or broken saw teeth

WAC 296-806-48022
Provide spreaders for circular resaws

Exemption:

- This requirement doesn't apply to self-feed saws with a roller or wheel at the back of the saw.

You must

- Provide a spreader that's **all** of the following:
  - Securely fastened behind the saw
  - Slightly thinner than the saw kerf
  - Slightly thicker than the saw disk

Rule

REQUIREMENTS FOR SPECIFIC CIRCULAR SAWS

WAC 296-806-48024
Protect employees from automatic saw hazards

You must

- Make sure automatic saws that stroke continuously without the operator controlling each stroke are **not** used where employees could be exposed to:
  - Saw hazards during operations such as loading, clamping, cutting, or unloading.

WAC 296-806-48026
Guard inverted swing (jump) saws

You must

1) Guard jump saws with a hood that both:
   - Covers the part of the saw that's exposed above the top of the table or above the material being cut
     and
   - Automatically adjusts to the thickness of the material being cut and remains in contact with it
2) Provide a holding device that will prevent stock from moving while cutting materials.
3) Provide warning signs, stickers, or placards when the pinching hazard created by the holding device can't be eliminated by design.

-Continued-

WAC 296-806-48026 (Continued)

4) Provide the following for automatically fed jump saws
   - Place guards over the roller conveyor to prevent persons from walking into or over the saw.
   - Enclose jump saws when below the table or roller conveyor and not in actual use
   - Install a positive stop to prevent the saw from passing the front edge of the roller conveyor or table
   - Make sure the throat in the table or roller conveyor is only wide enough to permit unobstructed operation of the saw

WAC 296-802-48028

Guard miter saws

IMPORTANT:

- Miter saws include:
  - Miter
  - Compound miter
  - Slide miter
  - Compound slide miter

You must

1) Guard miter saws with an upper hood that completely encloses the upper half of the blade.
2) Provide a method to protect employees from contacting the blade underneath the table while in its recommended carrying position.

-Continued-

Rule

WAC 296-806-48028 (Continued)

You must

3) Guard the lower blade:

- By making sure the teeth are guarded at least 3/4 of an inch beyond the root of the teeth, toward the center of the blade, except for a maximum 45 degree exposure of quadrant C when in the full retract position. See Illustration 480-1, Miter Saw Guarding.
- With a retractable guard that can't be locked in any position

Illustration 480-1
MITER SAW GUARDING

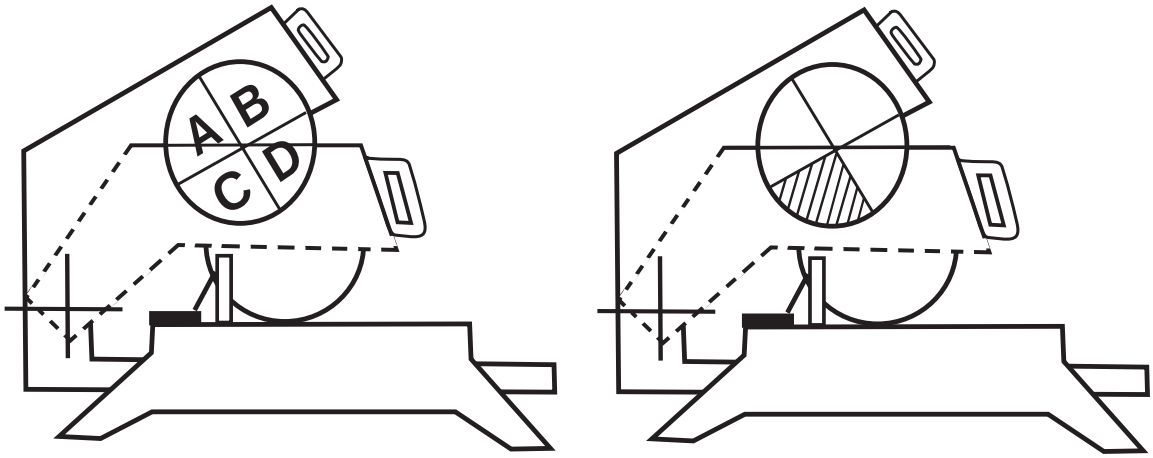

WAC 296-802-48030

Guard radial saws

You must

- Make sure the radial saw has a hood that does **all** of the following:
  - Completely encloses the upper portion of the blade down to a point that includes the end of the saw arbor
  - Protects the operator from flying splinters and broken saw teeth
  - Deflects sawdust away from the operator
- Provide a lower blade guard that does **all** of the following (see Guard radial saws, Illustration 480-2):
  - Guards the sides of the lower exposed portion of the blade to its full diameter
  - Automatically adjusts to the thickness of the stock being cut
  - Remains in contact with the stock to provide the maximum protection possible for the operation being performed
    or
  - Is a manually adjusted (wing) guard that:
    - Is made of material strong enough to withstand the forces put on it. Suggested materials include polycarbonates or expanded metal.
    - Has edges that are smooth so no hazards from the guard exist
    - Extends a minimum of 8 inches to both the front and arbor-end sides

-Continued-

Rule

WAC 296-802-48030 (Continued)

- Is adjustable in a vertical plane to the different thickness of stock so the gap is 3/8 inch or less between the bottom of the guard and the top of the stock.

Exemption:

- Saws may be guarded with a fixed enclosure, fixed barrier guard, or a manually adjusted guard when specific conditions prevent using a standard, automatic adjusting guard. Alternative guards have to both:
  - Provide protection equivalent to a standard automatic adjusting guard
    and
  - Be used according to the manufacturer's instructions with sufficient supervision to meet this requirement.

Illustration 480-2
GUARD RADIAL SAWS

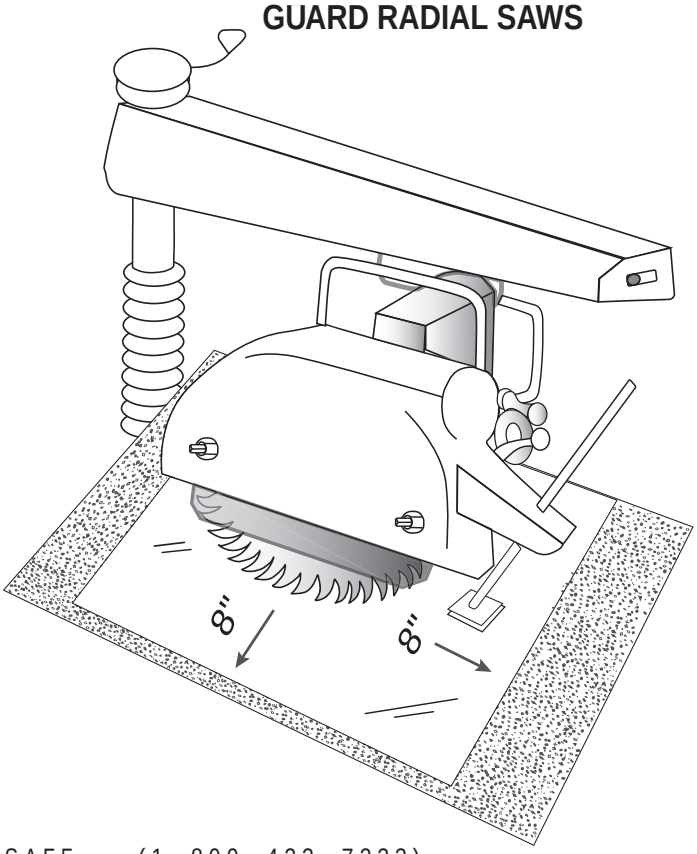

WAC 296-802-48032

Limit the travel of radial saws

You must

- Provide an adjustable stop that prevents:
  - Forward travel of the blade beyond the position necessary to complete the cut **and**
  - Any part of the saw blade from extending beyond the front edge of the work support table
- Install the saw so that the front end is slightly higher than the rear in order to cause the cutting head to return to the starting position when released by the operator.
- Make sure the cutting head or carriage does **all** of the following:
  - Returns gently to the rest or starting position when released by the operator
  - Doesn't bounce or recoil when reaching the rest or starting position
  - Remains in the rest or starting position

Rule

WAC 296-802-48034

Provide kickback protection for radial saws used for ripping wood products

You must

- Provide nonkickback fingers or dogs that are both:
  - Located on both sides of the saw to resist the tendency of the saw to pick up material or throw it back toward the operator
    and
  - Designed to hold any thickness of material being cut
- Make sure when ripping or ploughing that you feed the material from the end where the blade teeth enter the upper guard, which is against the direction in which the saw turns. See Ripping with a radial arm saw, Illustration 480-3.
- Make sure the direction of saw rotation is clearly marked on the hood.
- Fasten a permanent label at the rear of the guard hood, at about the level of the arbor, where the blade teeth exit the upper hood during saw operation that:
  - Reads, “DANGER: DO NOT RIP OR PLOUGH FROM THIS END”
  - Is colored standard danger red
  - Isn't less than 1 1/2 inches by 3/4 inch with standard proportional lettering

Illustration 480-3

RIPPING WITH A RADIAL ARM SAW

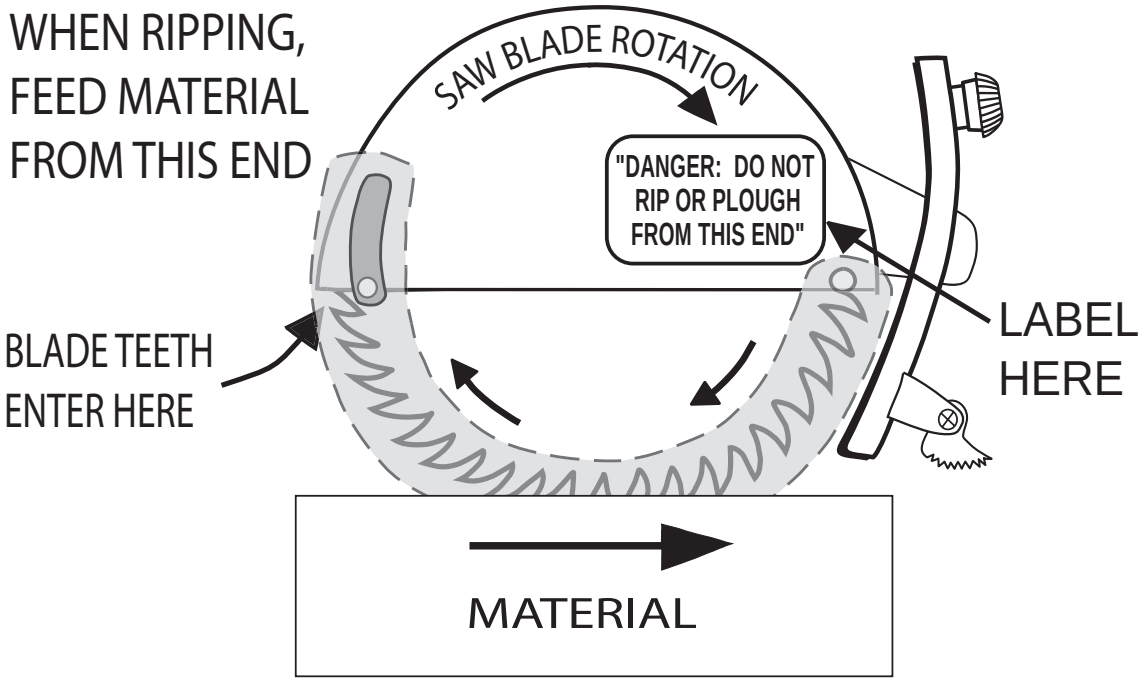

RIPPING

Rule

WAC 296-806-48036

Guard revolving double arbor saws

You must

- Guard each revolving double arbor saw with a hood that completely encloses the portion of the saw that's above both:
  - The table
    and
  - The material being cut

Note:

➢ Hoods should be made of material that:
- Doesn't shatter when broken
- Isn't explosive
- Is less combustible than wood

WAC 296-806-48038

Guard swing saws

IMPORTANT:

This section applies to swing saws mounted above the table.

You must

- Provide saws with a hood that encloses **all** of the following:
  - Upper half of the saw
  - Arbor end
  - Point of operation in all positions of the saw

-Continued-

WAC 296-806-48038 (Continued)

You must

- Make sure the hood protects operators from flying splinters and broken saw teeth
- Make sure the lower blade guard will automatically cover the lower portion of the blade by dropping on top of and remaining in contact with the table or the material being cut.

Exemption:

- Saws may be guarded with a fixed enclosure, fixed barrier guard, or a manually adjusted guard when specific conditions prevent using a standard, automatic adjusting guard. Alternative guards have to:
  - Provide protection equivalent to a standard automatic adjusting guard
    and
  - Be used according to the manufacturer's instructions with sufficient supervision to meet this requirement.

WAC 296-806-48040

Limit the travel of swing saws

IMPORTANT:

This section applies to swing saws that are mounted above the table.

You must

- Provide saws with a device that:
  - Automatically returns the saw to the back of the table when the saw is released at any point in its travel
  - Doesn't depend on a rope, cord, or spring to function properly

-Continued-

Rule

WAC 296-806-48040 (Continued)

You must

- Make sure devices that use a counterweight meets these requirements:
  - The bolts supporting the bar and the counterweight use cotter pins
  - The counterweight is prevented from dropping by **one** of these methods:
    - A bolt passing through both the bar and the counterweight
    - A bolt through the extreme end of the bar
    - A safety chain to hold it to the bar if the counterweight doesn't completely encircle the bar
- Provide limit chains or another equally effective device to prevent the saw from swinging either:
  - Beyond the front or back edge of the table
    or
  - Forward to a position where the gullets of the lowest saw teeth will rise above the table top.

REQUIREMENTS FOR BAND SAWS AND DRAG SAWS

WAC 296-806-48042

Make sure band saws meet these requirements

You must

- Enclose or guard all portions of the blade except for the working portion of the blade between the guide rolls and the table.
- Make sure the guard for the portion of the blade between the sliding guide and the wheel guard meets these requirements:
  - Protects the front and outer side of the blade
  - Is self-adjusting to move with the guide
  - Adjusts so the gap between the guide rolls and stock is as small as is practical
- Fully enclose band saw wheels with wheel guards that meet **both** of the following requirements:
  - The outside periphery of the wheel enclosure is solid
    and
  - The front and back of the wheels are enclosed by solid material, wire mesh, or perforated metal.
- Make sure the material used for wheel guards meets these requirements:
  - Wire mesh and perforated metal guards:
    - Are at least 0.037 inch (U.S. Gage No. 20) thick
    - Have openings in them that are 3/8 inch or less
  - Solid material has strength and firmness equivalent to a wire mesh or perforated steel guard
- Make sure band saws have a tension control device to indicate the proper tension for standard saws used on the machine.

Rule

WAC 296-806-48044

Protect employees from drag saw hazards

You must

- Protect employees passing near a drag saw by either:
  - Providing a 4-foot clearance when the saw is at the extreme end of the stroke **or**
  - Enclosing the saw and its driving mechanism, if you can't provide a 4-foot clearance.

GENERAL REQUIREMENTS FOR ALL CUTTING HEADS

WAC 296-806-48046

Maintain and balance knives and cutting heads

You must

- Make sure knives and cutting heads are kept:
  - Sharp
  - Properly adjusted
  - Firmly secured
- Make sure knives are properly balanced when 2 or more are used in one cutting head.

Rule

BORING AND MORTISING MACHINES

WAC 296-806-48048

Make sure boring and mortising machines meet these requirements

Exemption:

- This section doesn't apply to drill presses, boring machines, or mortising machines if both of the following apply:
  - The downward stroke of the chuck and bit is controlled manually by the operator
    and
  - The chuck and bit automatically rises to the start position when control is released

You must

- Completely enclose universal joints on spindles of boring machines to prevent accidental contact by the operator.
- Make sure you don't use safety bit chucks that have projecting set screws
- Enclose the top of the cutting chain and driving mechanism.
- Prevent a counterweight, when used, from dropping by one of the following, or an equivalent method:
  - Securing it to a bar by one of the following:
    - A bolt passing through both the bar and the counterweight
    - A bolt through the extreme end of the bar
    - A safety chain to hold it to the bar if the counterweight doesn't completely encircle the bar
      or
    - Suspending it by a chain or wire rope and having it travel in a pipe or other suitable enclosure if it could fall and injure an employee.

Note:

➢ Boring bits should be provided with a guard that will enclose all portions of the bit and chuck above the material being worked.

CHIPPER AND HOG MILLS

WAC 296-806-48050

Follow these requirements for chipper mills

Exemption:

- This section doesn't apply to mobile chippers.

Reference:

➢ Safety requirements for mobile chippers can be found in Pruning, Repairing, Maintaining and Removing Trees and Cutting Brush, Section 9.6, ANSI Z133.1-2000.

You must

1) Arrange the feed system so the operator doesn't stand in direct line with the chipper blades or spout (hopper).
2) Protect the operator from chips or chunks being thrown out while feeding the machine.
3) Enclose the chipper spout to a height or distance of at least 40 inches from the floor or the operator's station, whichever is higher.
4) Provide a mirror or other device to allow monitoring of material when the operator can't readily observe the material being fed into the chipper.

Rule

WAC 296-806-48052

Follow these requirements for hog mills

You must

1) Make sure that feed chutes are at least 40 inches from the knives or feed roll.
2) Provide baffles or other suitable safeguards to prevent material from being thrown from the hog mill.

WAC 296-806-48054

Protect employees from falling into chipper and hog mills

You must

- Protect employees working near the feed openings of chipper and hog mills from falling into the openings by providing **at least one** of the following:
  - A safety belt (or harness) and a lifeline short enough to prevent workers from falling into the mill
  - Barriers or other types of protective guarding

Reference:

➢ See, Railing, toeboards and cover specifications for requirements on guardrails used as barriers, in WAC 296-24-75011.

JOINTERS

WAC 296-806-48056

Make sure jointers with horizontal cutting heads meet these requirements

You must

- Make sure the cutting head on hand-fed jointers is cylindrical:
  - Install and adjust the knife blade so it does not protrude more than 1/8 inch beyond the body of the head
- Make sure the opening in the table meets **all** of the following:
  - Is kept as small as possible
  - The clearance between the edge of the rear table and the cutting head is not more than 1/8 inch
  - The table throat opening isn't more than 2 1/2 inches when the tables are set or aligned with each other for zero cut

WAC 296-806-48058

Guard horizontal cutting heads on hand-fed jointers

You must

- Provide jointers with an automatic guard on the working side of the fence or gage that does **all** of the following:
  - Covers all sections of the head
  - Effectively keeps the operator's hand from contacting the revolving knives.
  - Automatically adjusts to cover the unused portion of the head
  - Remains in contact with the material at all times
- Provide jointers with a guard that covers the section of the head behind the gage or fence.

Rule

WAC 296-806-48060

Guard vertical cutting heads on jointers

You must

- Provide each jointer that has a vertical cutting head with an exhaust hood or other type of guard that completely encloses the revolving head except for a slot that's wide enough for the material being jointed.

MOLDING, STICKING AND MATCHING MACHINES

WAC 296-806-48062

Make sure molding, sticking and matching machines meet these requirements

You must

- Make sure all cutting heads, and saws if used, are covered by a guard that:
  - Is metal
  - Forms all or part of the exhaust hood if an exhaust system is used
- Make sure a guard constructed from:
  - Sheet metal is at least 1/16 inch thick.
  - Cast iron is at least 3/16 inch thick.
- Make sure feed rolls are guarded by a hood or other suitable guard that both:
  - Prevents the operator's hand from contacting the in-running rolls at any point **and**
  - Is attached to the frame carrying the rolls so it adjusts for any thickness of stock

PANEL RAISERS AND OTHER SIMILAR MACHINES

WAC 296-806-48064

Guard hand-fed panel raisers and other similar machines

You must

- Guard the cutting heads of hand-fed panel raisers and other similar machines by enclosing the cutting head with either:
  - A fixed guard such as a cage
    or
  - An adjustable guard designed to keep the operator's hand away from the cutting edge

PLANERS

WAC 296-806-48066

Make sure planers with a horizontal cutting head meet these requirements

You must

- Make sure the cutting head on hand-fed planers is cylindrical.
  - Install and adjust the knife blade so it doesn't extend more than 1/8 inch beyond the body of the head.

Rule

WAC 296-806-48068
Guard planers

You must

- Make sure all cutting heads, and saws if used, are covered by a guard that:
  - Is metal
  - Forms all or part of the exhaust hood if an exhaust system is used
- Make sure a guard constructed from:
  - Sheet metal is at least 1/16 inch thick.
  - Cast iron is at least 3/16 inch thick.

WAC 296-806-48070
Guard planer feed rolls

You must

- Make sure feed rolls are guarded by a hood or other suitable guard that:
  - Prevents the operator's hand from contacting the in-running rolls at any point
  - Is attached to the frame carrying the rolls so it remains in adjustment for any thickness of stock

Rule

WAC 296-806-48072

Provide kickback protection on planers running stock of varied thickness

You must

- Provide kickback protection on planers running stock of varied thickness at the same time by providing either:
  - Sectional feed rolls that provide feeding contact pressure on the stock
    or
  - Suitable nonkickback fingers at the infeed end of each section

Note:

➢ The sectional feed rolls need to have sufficient yield in their construction to provide contact pressure on:
  - Any thickness of stock the machine is capable of processing

Rule

SHAPERS

WAC 296-806-48074

Make sure shapers meet these requirements

You must

- Guard the cutting head of the shaper by enclosing it with either:
  - A fixed guard, such as a cage
    or
  - An adjustable guard designed to keep the operator's hand away from the cutting edge
- Make sure the diameter of a circular shaper guard is at least as large as the greatest diameter of the cutter.

Note:

➢ A warning device of leather or other material attached to the spindle is **not** an acceptable substitute for a guard.

You must

- Guard all sections of the cutting tool except for an opening to allow access to the workpiece by the cutting tool.

Note:

➢ A ring guard is one means of satisfying the guarding requirement for cutting tools when involved in free hand or template shaping.

You must

- Make sure all double-spindle shapers have a spindle starting and stopping device for each spindle.

TENONING MACHINES

WAC 296-806-48076
Guard tenoning machine feed chains and sprockets

You must

- Guard feed chains and sprockets of all double-end tenoning machines by completely enclosing both of the following:
  - All sprockets
    and
  - Portions of the chain that aren't used for conveying stock

WAC 296-806-48078
Guard tenoning machines

You must

- Make sure all cutting heads, and saws if used, are covered by a metal guard that:
  - Covers at least the unused part of the periphery of the cutting head
  - Forms all or part of the exhaust hood if an exhaust system is used
- Make sure a guard constructed from:
  - Sheet metal is at least $^{1}/_{16}$ inch thick.
  - Cast iron is at least $^{3}/_{16}$ inch thick.

Rule

VENEER MACHINES

WAC 296-806-48080

Guard veneer cutters and wringer knives

You must

- Provide guards to prevent accidental contact with the front or rear knife edge.

WAC 296-806-48082

Guard veneer clippers

You must

- Make sure employees don't accidentally contact the knife edge of veneer clippers by providing either:
  - An automatic feed
    or
  - Guarding at both the front and rear of the clippers

WAC 296-806-48084

Follow these requirements for guarding guillotine cutters

Exemption:

- These requirements don't apply to continuous-feed trimmers.

You must

1) Provide **one** of the following to hand and foot powered guillotine cutters, so employees' hands can't reach the cutting edge of the knife:
   - Rods
   - Plates
   - Other satisfactory means of protection such as those outlined in Safeguarding Methods, WAC 296-806-20042 through WAC 296-806-20058.
2) Provide power-driven guillotine veneer cutters with either of the following:
   - Starting devices for each operator that require all of the following:
     - Both hands activating controls at the same time to start the cutting motion
     - At least one hand on a control during the complete stroke of the knife

     or
   - An automatic guard that does all of the following:
     - Keeps the hands of the operator away from the danger zone every time the blade comes down
     - Is used in combination with one-handed starting devices that require 2 separate movements of the device to start the cutting motion
     - Is designed to return positively to the nonstarting position after each complete cycle of the knife

Rule

WAC 296-806-48086

Provide mechanisms to stop power-driven guillotine cutters

Exemption:

- This requirement doesn't apply to continuous-feed trimmers.

You must

- Provide power-driven guillotine cutters with both:
  - Brakes or other stopping mechanism
    and
  - An emergency device that will prevent the machine from operating if the brake fails when the starting mechanism is in the nonstarting position

WAC 296-806-48088

Prohibit riders on veneer slicer carriages

You must

- Prohibit employees from riding on veneer slicer carriages

Sewing Machines

WAC 296-806-485

Summary

• In addition to the requirements in this section, you need to refer to the following sections of this chapter in order to fully protect your employees from machine hazards: – Requirements for All Machines, WAC 296-806-200 and WAC 296-806-300

This section applies to the hazards of needle injuries from domestic or light duty sewing machines.

YOUR RESPONSIBILITY:

To protect employees from hazards associated with sewing machines

You must

Guard sewing machine needles
WAC 296-806-48502 485-2

Rule

WAC 296-806-48502

Guard sewing machine needles

Exemption:

- This section doesn't apply to domestic-type sewing machines having a presser foot that's in the “down” position during operation of the machine.

You must

- Provide a permanently attached guard on each sewing machine that:
  - Prevents the operator’s fingers from passing under the needle.
  - Allows the needle to be conveniently threaded without removing the guard.

Reference:

➢ For specific requirements about safeguarding sewing machine belts can be found in, Safeguard belt and rope drives, WAC 296-806-30004.

Definitions

Abrasive wheel

A grinding tool consisting of bonded abrasive grains. This includes diamond and reinforced wheels.

Adjustable barrier guard

A barrier guard with provisions for adjustment to accommodate various jobs or tooling set-ups.

Air-lift hammer

A type of gravity drop hammer in which the ram is raised for each stroke by an air cylinder. Because the length of stroke can be controlled, ram velocity, and therefore the energy delivered to the workpiece, can be varied.

Anti-repeat

A device that limits the machine to a single stroke if the activating means is held in the operative position.

Arbor

A rotating shaft used for mounting and transmitting torque to a cutting tool.

Authorized person

Someone the employer has given the authority and responsibility to perform a specific assignment.

Awareness barrier

A barrier device that allows more access to the hazard area, but still restricts access enough to warn of an approaching hazard.

Barricade

A barrier such as a guardrail, fence, or other framework designed to prevent employee access and exposure to a hazard.

Machine Safety

WAC 296-806-500

Definitions

Barrier guard

A barrier that provides a physical restriction from a hazard.

Belt conveyors

An endless belt of any material, operating over suitable pulleys to move materials placed on the belt.

Belt pole

A device used in shifting belts on and off fixed pulleys on line or countershaft where there are no loose pulleys. Belt poles are sometimes called “belt shippers” or “shipper poles.”

Belt shifter

A device for mechanically shifting belts from tight to loose idler pulleys or vice versa, or for shifting belts on cones of speed pulleys.

Bench grinder

A bench mounted off-hand grinding machine with either one or 2 wheels mounted on a horizontal spindle.

Bending

The application of stress concentrated at specific points to permanently turn, press or force from a straight, level or flat condition to a curved or angular configuration.

Blade

A replaceable tool having one or more cutting edges for shearing, notching or coping.

Blanking

To bypass a portion of the sensing field of a presence-sensing device. The purpose is to allow objects such as tooling, feed stock, and workpieces to pass through the sensing field without sending a stop signal to the controlled machine. There are 2 blanking modes: fixed and floating.

Definitions

Blind hole

A hole drilled in an object, such as an abrasive wheel, that doesn't go all the way through the object.

Blotter

A compressible disc or washer, usually of blotting paper, plastic, cardboard, or gasket material, that's used between the wheel and the flanges to evenly distribute flange pressure on the wheel.

Board hammer

A type of gravity drop hammer where wood boards attached to the ram are raised vertically by action of contra rotating rolls, and then released. Energy for forging is obtained by the mass and velocity of the freely falling ram and the attached upper die.

Bolster plate

Plate attached to the press bed having holes, T-slots, or other means for attaching the lower die or die shoe.

Brake

Mechanism for stopping or preventing motion.

Chain conveyor

A conveyor in which one or more chains (including those with paddles or bars attached to them) move the conveyor. Specific examples of chain conveyors include drag, rolling, pusher bar, pusher chain and sliding chain conveyors.

Channel blanking

A feature that allows a safety light curtain system to be programmed to ignore objects. Also called “fixed blanking.”

Chipper

A machine that cuts material into chips.

Machine Safety

WAC 296-806-500

Definitions

Chuck

A revolving clamp-like device used for holding and driving the workpiece.

Clutch

A mechanism to couple the flywheel to the crankshaft. When engaged, it allows the driving force to be transmitted to the press slide.

Comb (See feather board)

Concurrent

Occurring at the same time.

Cone Pulley

A pulley having 2 or more steps in a conical shape for driving machinery.

Cone and plug wheels (Types 16, 17, 18, 18R, and 19)

Abrasive wheels manufactured with blind hole threaded bushings. They may be used on all surfaces except the flat mounting surface. Specific characteristics of the different cone and plug wheels are:

- Type 16 cones have a curved side with a nose radius.
- Type 17 cones have straight sides with or without a nose radius.
- Type 18 and 18R plug wheels are cylindrical in shape with either a square or curved grinding end.
- Type 19 cone wheels are a combination of cone and plug shapes.

Control system

Sensors, manual input and mode selection elements, interlocking and decision-making circuitry, and output elements of the press-operating devices and mechanisms.

Coping-notching

Where the edge or periphery of the workpiece is sheared.

Counterbalance

Mechanism used to balance or support the weight of the connecting rods, slide, and slide attachments.

Cutting-off wheels

Abrasive wheels used to cut material such as masonry, pipe, etc.

Cutting tool or saw blade

A tool used on a metal sawing machine.

Cycle

The complete movement of the ram from its starting position and return to that same starting position.

Dado

A straight-sided groove, perpendicular to the face of the workpiece, having a width greater than the thickness of a single saw blade.

Device

A control or attachment that's any of the following:

- Restrains the operator from inadvertently reaching into the hazardous area.
- Prevents normal or hazardous operation if any part of an individual's body is inadvertently within the hazardous area.
- Automatically withdraws the operator's hands, if the operator's hands are inadvertently within the hazardous area during the hazardous portion of the machine cycle.
- Maintains the operator or the operator's hands during the hazardous portion of the machine cycle at a safe distance from the hazardous area.

Machine Safety

WAC 296-806-500

Definitions

Die or dies

Tooling used in a press for shearing, punching, forming, drawing, or assembling metal or other material.

Die enclosure guard

Guard attached to the die shoe or stripper in a fixed position.

Die setter

A person who installs or removes dies from the press, and makes the necessary adjustments so the tooling functions properly and safely.

Die setting

Process of installing or removing dies, and adjusting the dies, other tooling and the safeguarding guards or devices.

Die shoe

Plate or block that a die holder is mounted on. It functions primarily as a base for the complete die assembly and, if used, is bolted or clamped to the bolster plate or the face of the slide.

Die shutheight

Actual or design dimension between the mounting surfaces of a die.

Divider

A machine that mechanically divides the dough into pieces of predetermined volume or weight.

Dough Sheeter (See sheeter)

Dressed

When material is removed from the cutting surfaces of an abrasive wheel to expose new sharp cutting surfaces.

Drilling/boring machine

A single or multiple spindle machine that uses a rotating cylindrical tool such as a drill, a counterboring tool, and similar tools to produce a hole, blind hole, counterbore, countersink, and similar cavities in workpieces. A work support means is provided to feed the tool into the workpiece or the workpiece into the tool.

Dross

Waste product or impurities formed on the surface of molten metal.

Dump bin and blender

That part of the flour handling system where the containers of flour are emptied.

Face of the slide

Surface of the slide to which the punch or upper die is generally attached.

Feather board/comb

A work-guiding and hold-down device consisting of stock with a series of spring-like fingers along the edge, set and positioned at an angle to the workpiece.

Feeding

Placing material in or removing it from the point of operation.

Fence

A device used to locate and guide a workpiece relative to the cutting tool.

Fixed barricade

A guard attached to a fixed surface used to enclose a hazardous area and prevent employees from placing any part of their body into the point of operation.

Fixed barrier guard

A guard attached to the frame, bolster, or other surface to enclose all or part of the point of operation or other hazard area.

Machine Safety

WAC 296-806-500

Definitions

Fixed blade

A stationary blade having one or more cutting edges.

Fixed blanking

A feature that allows a safety light curtain system to be programmed to ignore objects. Also called “channel blanking.”

Fixture/jig

A device used to locate, hold, or clamp one or more workpieces in a desired position.

Flanges

Collars, discs, or plates between or against which wheels are mounted. There are 4 types of flanges:

- Adaptor
- Sleeve
- Straight relieved
- Straight unrelieved

Floating blanking (floating window)

A feature that allows a safety light curtain system to be programmed to ignore the interruption of one or 2 beams within the light curtain. This allows the feeding of an object through the defined area at any point along the length of the curtain without causing it to produce a stop signal.

Floorstand grinder

A floor mounted, off-hand grinding machine with one or 2 wheels mounted on a horizontal spindle. The wheels are normally 24 inches or 30 inches in diameter and used for snagging operations.

Forging

Metal formed to a desired shape by impact or pressure in hammers, forging machines (upsetters), presses, rolls, and related forming equipment. Forging hammers, counterblow equipment, and high-energy-rate forging machines impart impact to the workpiece, while most other types of forging equipment impart squeeze pressure in shaping the stock. Some metals can be forged at room temperature, but the majority of metals are made more plastic for forging with heat. Forged or drop forged parts are much stronger than poured or cast parts from foundries.

Forging presses

A class of forging equipment where the shaping of metal between dies is performed by mechanical or hydraulic pressure and usually is accomplished with a single workstroke of the press for each die station.

Full revolution clutch

Type of clutch that, when engaged, can't be disengaged until the press has completed a single cycle (stroke).

Gage (See miter gage)

Gap (throat)

An opening or recess in the frame of the machine to permit positioning of material or workpieces.

Gate or movable barrier device

Safeguarding device that encloses the point of operation before press motion can be initiated.

Guard (abrasive wheels)

An enclosure designed to restrain the pieces of an abrasive wheel and furnish protection to the operator if the wheel is broken during operation.

Machine Safety

WAC 296-806-500

Definitions

Guard

A barrier that does at least one of the following:

- Prevents the hands or other body part from reaching through, over, under, or around the guard into the hazard area.
- Prevents objects or debris from falling onto or being ejected towards an employee.

Guidepost

The pin attached to the upper or lower die shoe. It operates within the bushing on the opposing die shoe to maintain the alignment of the upper and lower dies.

Hazard

A condition that could cause physical harm to a person.

Hazard area

An area or space that poses an immediate or impending physical hazard.

Hog

A machine used for cutting or grinding slabs and other coarse residue from the mill.

Horizontal lathe

A turning machine in which the workpiece revolves about a horizontal axis. While the work is revolving, it's being shaped by cutting tools working either parallel to the axis of the work or at an angle to the axis of the work.

Idler (pulley)

A pulley or roller on a shaft that presses against or rests on a drive belt to guide it or take up slack.

Inch

Die setting mode that engages the driving clutch so a small portion of one cycle (stroke) occurs, depending upon the length of time the operator control is held actuated.

Indirect recirculating ovens

Ovens that are equipped with a gas-tight duct system, a furnace, and a circulating fan. Combustion gases are circulated through this enclosed system and mixed with fresh combustion gases generated by the burner in the combustion chamber. A vent or overflow removes a portion of the gases to make room for the fresh gases added by the burner. No unburned gases or products of combustion enter the baking chamber.

Interlocked barrier guard

Barrier attached to the press frame and interlocked with the press control system so the press stroke can't be started normally unless the guard, or its hinged or movable sections, enclose the point of operation.

Inverted swing and jump saws

Saws with a saw blade starting position below the table, where the blade must travel through the horizontal plane of the tabletop to make the cut on the stock.

Ironworker

A machine with multiple workstations at which various operations may be performed singly or simultaneously, including but not limited to:

- Punching
- Shearing
- Notching
- Coping,

  and
- Forming.

Jig (See fixture)

Jog

Die setting mode where intermittent motion's imparted to the slide by momentary operation of the drive motor after the flywheel is at rest and the clutch is engaged.

Machine Safety

WAC 296-806-500

Definitions

Jointer

A machine that has a cylindrical cutter head with more than one knife or cutting edge. It has an adjustable in-feed means of work support, or an adjustable cutter head or knives, as well as a fence or other workpiece guide.

Jump saw

A machine that utilizes a means of work support and hold down, and has a powered arbor on an arm that pivots about a point located behind the saw arbor at approximately the same height. At rest position the saw blade is below the workpiece. See Inverted swing and jump saws.

Kerf

The slot made by a saw blade as it saws through a workpiece.

Kickback

The uncontrolled propulsion or self-feed type action of a workpiece in the direction of the rotation or travel of the working portion of the saw, cutting tool, sanding belt, or sanding head.

Live roller conveyor

A series of rollers with objects moving over them through power to all or some of the rollers. The power is usually transmitted by a belt or chain.

Mandrel

Tooling or a machine component used to provide internal support. It can be a spindle or shaft on which a tool is mounted, such as a drill bit.

Manlift

A device consisting of a power-driven endless belt moving in one direction only, and provided with steps or platforms and handholds attached to it for the transportation of personnel from floor to floor.

Manual feeding

The operator puts material or the part being processed into the press for each cycle (stroke).

Maximum exposure angle

The largest part of a wheel that doesn't need to be covered by a safety guard.

Miter gage

A device used as a workpiece pusher, guided by a table groove.

Miter saw

A cutoff saw with a means of work support. It utilizes a powered arbor on an arm that pivots about a point located behind the saw arbor at approximately the same height. The saw arbor may also slide vertically. In the at-rest position, the saw blade is above the maximum capacity workpiece.

Mode

The state or condition of the control system that allows specific operations of the machine.

Modified types 6 and 11 wheels (terrazzo)

Similar to Type 6 “straight cup” wheels and Type 11 “flaring cup” wheels except for the bottom of the cup. The bottom of the cup is flat in Type 6 and 11 wheels. The modified wheels have bottoms that are sloped downwards towards the mounting hole. These modified wheels need to be mounted using a special tapered flange furnished by the tool manufacturer. These wheels are used in the terrazzo trade.

Molding machine

A machine that uses more than one arbor-mounted cylindrical, rotating cutting tool. It also uses power feeding, where once a workpiece is engaged, it carries the workpiece linearly through the balance of the intended operations, without further operator action. Operations can be performed on all surfaces of a workpiece. Workpieces can be hopper- or hand-loaded and are fed ribbon-style into the machine.

Machine Safety

WAC 296-806-500

Definitions

Mortiser

A machine designed to produce a square or rectangular cavity through use of a moving, forming, or reciprocating tool. Means are provided to clamp and support the stock, and either move the stock into the tool or the tool into the stock.

Moulder

A machine in which the dough pieces are shaped and formed prior to final proofing.

Mounted wheels

Bonded abrasive wheels of various shapes, usually 2 inches diameter or smaller, that are secured to plain or threaded steel shafts or mandrels.

Movable barrier device (See gate or movable barrier device)

Nip-point belt and pulley guard

A guard that encloses the pulley and has rounded or rolled edge slots for the belt to pass through.

Off-hand grinding

Grinding of a workpiece that's held in the operator's hand.

Overland conveyor

A single or series of belt conveyors designed to carry bulk material long distances, usually following the general contour of the land.

Part revolution clutch

Type of clutch that can be disengaged before the press slide completes a full stroke.

Pedestal grinder

An off-hand grinding machine similar to a bench grinder mounted on or otherwise attached to a floor-mounted pedestal.

Pinch point

Any point, other than the point of operation, where it's possible for a part of the body to be caught between moving parts or between a moving part and stationary one.

Planer

A machine with at least one cylindrical cutter head, that includes one or more inserted knife or cutting edge. A planer has a cutter head mounted over a means of work support. It also uses either an adjustable work support or cutter head to size the stock. The workpiece is usually power-fed.

Point of operation

The area on a machine where work is actually performed upon the material being processed.

Power-driven hammers

Types of drop hammers in which the ram is raised for each stroke by a double-action steam, air, or hydraulic cylinder, and the energy delivered to the workpiece is supplied by the velocity and weight of the ram and attached upper die driven downward by steam, air, or hydraulic pressure. Energy delivered during each stroke may be varied.

Power transmission parts

The mechanical components of a piece of equipment that, together with a source of power (sometimes referred to as a prime mover), provide the motion to a part of a machine or piece of equipment.

Presence-sensing device

A device that creates a sensing field, area, or plane to detect the presence of an individual or object.

Presence-sensing device initiation (PSDI)

Operating mode of a mechanical power press where a single cycle (stroke) is initiated by a presence-sensing device when it senses that the operator has finished feeding or removing parts and all parts of the operator's body are withdrawn from the sensing field of the device.

Machine Safety

WAC 296-806-500

Definitions

Pull-back device

A device attached to the operator's hands and connected to the upper die or slide of the press that will pull the operator's hands out of the point of operation as the dies close.

Push block

A nonmetallic device with one or more handles. A push block also has a flat bottom surface with either a heel or friction material on it, used as a hold-down and feed device. The purpose of this is to provide a safe distance between the hands and the cutting tool.

Pusher-bar conveyor

Two endless chains cross-connected at intervals by bars or pushers that propel the load along the bed or trough.

Push stick

A nonmetallic stick shaped device designed to provide a safe distance between the hands and the cutting tool. It has, as part of its design, a notched end with a heel and toe to hold down and feed the workpiece past the cutting tool.

Racks

Carriers of pans, panned dough and bakery products. They are usually constructed of metal and mounted on casters or provided with trolleys for use on a monorail system.

Reinforced wheels

Organic bonded abrasive wheels which have webbing, fabric or filament to provide resistance to complete breaking of the wheel should it become cracked or damaged.

Repeat

An unintended or unexpected successive stroke of the press resulting from a malfunction.

Restraint device

A device with attachments for the operator's hands and wrists that prevent the operator from reaching into the hazardous area.

Return-belt idlers

A roller that supports the return run of the conveyor belt.

Ripping

A sawing operation made through the thickness of the workpiece with the grain of natural wood, along the long dimension of a rectangular workpiece, and usually parallel to that edge on reconstituted wood products. Two or more pieces result from the operation.

Rivet-making machines

The same as upsetters and bolt-headers when producing rivets with stock diameter of one inch or more.

Riving knife (See spreader)

SFPM (See surface feet per minute)

Safeguarding by location

Because of its location, no employee can inadvertently come in contact with a hazard during operation, maintenance, or servicing.

Safeguarding by distance

Employees are kept far enough from a hazard that they won't contact or be injured by the hazard.

Safeguarding device (See device)

Safety block

A prop inserted between the upper and lower dies or between the bolster plate and the face of the slide to prevent the slide from falling of its own weight.

Safety cylinder

This safety device may be of the direct cushion type integral with the main cylinder or it may be of the separate cushion type whereby a constant supply of live steam or air is applied behind a separate piston adjacent to the main cylinder. A spring, suitably constrained, may also be employed.

Machine Safety

WAC 296-806-500

Definitions

Safety cylinder head

An air cushion at the top of the hammer, just below the head, to protect the head from damage by the piston.

Scale

Any layer or leaf of metal resembling the scale of a fish in size and thinness; such as a scale of iron.

Screw conveyor

A screw or auger that revolves in a suitably shaped trough or casing, used to move material in one specific direction.

Shaper

A machine that uses one or more vertical spindles that are either fixed or able to be tilted, usually with an arbor mounted rotating cylindrical cutter, to form decorative or functional forms on a manually or power-fed workpiece. The workpiece is supported on a stationary or moving table. A guide, fixture, or template is used to control the operation. The spindle can be mounted above or below the work support means.

Sheeter

A machine that forms dough into a sheet by compression through one or more sets of driven rolls.

Sifter

A device that sifts flour. Sifter types are brush, oscillating, or vibrating.

Single stroke mechanism

Used on a full revolution clutch to limit the travel of the slide to one complete stroke at each engagement of the clutch.

Slat and roller slat conveyor

A conveyor employing one or more endless chains to which nonoverlapping, noninterlocking, spaced slats are attached.

Slide

Part of the press that moves back and forth in a straight line. Also called a ram, plunger, or platen.

Snagging

Grinding which removes relatively large amounts of material without regard to close tolerances or surface finish.

Spreader

A flat metal device slightly narrower than the saw kerf. It's designed to prevent the saw blade kerf in the workpiece from closing on the sides of the blade during a sawing operation.

Steam hammers

A type of drop hammer where the ram is raised for each stroke by a double-action steam cylinder and the energy delivered to the workpiece is supplied by the velocity and weight of the ram and attached upper die driven downward by steam pressure. Energy delivered during each stroke may be varied.

Stripper

A mechanism or die part for removing parts or material from the punch.

Surface feet per minute (SFPM)

A measure of the speed of a point on the periphery (outer edge) of an abrasive wheel. It's calculated using the formula:

SFPM = .262 X diameter of the wheel (in inches) X RPM (revolutions per minute)

Example:
Wheel diameter = 24 inches
Spindle speed = 1000 RPM
SFPM = .262 X 24 X 1000 = 3,144 SFPM

Machine Safety

WAC 296-806-500

Definitions

Sweep device

A single or double arm (rod) attached to the upper die or slide of the press that's designed to move the operator's hands to a safe position as the dies close. Sweep devices aren't allowed for point-of-operation safeguarding.

Swing saw/overhead swing cutoff saw

A machine with a means of work support using a powered arbor and circular saw blade that pivots about a point located above the saw arbor.

Tenoning machine

A machine designed to use 2 or more cylindrical cutters, or one or 2 circular saws, to size or prepare (or both) the ends of a workpiece. The workpiece is supported on a table or conveying means. A means for clamping the workpiece is provided.

Terrazzo

A material of stone chips, such as marble, set in mortar and polished.

Threaded hole wheels

Abrasive wheels that have one central threaded bushing, securely anchored in place. They are mounted by being screwed onto a threaded machine spindle so that the wheel back seats firmly against an unrelieved flat back flange.

Tongs

Metal holder used to handle hot or cold forgings.

Tongue guard

An intergral part of a safety guard that's located where the upper exposed part of the abrasive wheel meets the safety guard. It can be adjusted as necessary to maintain a set distance from the constantly decreasing diameter of the wheel.

Tooling

Elements for guiding or imparting a desired configuration to the material.

Top grinding

Grinding done above the horizontal centerline of the wheel.

Towed conveyor

An endless chain supported by trolleys from an overhead track or running in a track on the floor with means for towing floor-supported trucks, dollies, or carts.

Trimming presses

A class of auxiliary forging equipment that removes flash (metal splash) or excess metal from a forging. This trimming operation can also be done cold, as in can coining, a product-sizing operation.

Trip (or tripping)

Momentary actuation of the activating control to initiate the cycle (stroke).

Trued

When the cutting surfaces of an abrasive wheel have been reshaped to expose new sharp cutting surfaces.

Turnover bar

A bar used in die setting to manually turn the crankshaft of the press.

Two-hand device

A device that requires the concurrent use of both of the operator's hands to both initiate and continue the machine cycle during the hazardous portion of the machine cycle.

Two-hand trip device

A device that requires concurrent operation of the trip controls or levers by the operator's hands to initiate the machine cycle.

Type A movable gate

A device that encloses the hazardous area when the machine cycles and doesn't open until the end of the cycle.

Machine Safety

WAC 296-806-500

Definitions

Type B movable gate

A device that encloses the hazardous area when the machine cycles and opens when hazardous motion of the cycle is over. Type B devices aren't allowed on full revolution type machinery.

Type 1 wheel

An abrasive wheel shaped like a disc with a mounting hole in the middle. Sometimes called a “straight wheel.” It has diameter (D), thickness (T), and hole size (H) dimensions. Grinding is normally done on the periphery (outside curve) of the wheel (T dimension). Can be used for grinding, cutting-off, and tuck pointing.

Type 2 wheel

An abrasive wheel shaped like an open-ended, hollow cylinder. Sometimes called a cylinder wheel. It has diameter (measured from the outer wall of the cylinder), wheel thickness (height of the cylinder), and rim thickness (thickness of the cylinder wall). Grinding is done on the end of the cylinder (rim thickness dimension).

Type 6 wheel

An abrasive wheel shaped like a straight-sided cup or bowl with a mounting hole in the bottom of the cup. Sometimes called a “cup wheel.” It has diameter (D), thickness (T), hole size (H), rim thickness (W), and back thickness (E) dimensions. Grinding is normally done on the cup rim (W dimension).

Type 11 wheel

An abrasive wheel shaped like a cup or bowl with a mounting hole in the bottom of the cup. The sides of the cup aren't straight-sided but are angled outward. Sometimes called a “flaring cup wheel” since the sides are “flared” out. It has double diameter dimensions (top D and bottom J). It also has thickness (T), hole size (H), rim thickness (W) and back thickness (E) dimensions. Grinding's normally done on the cup rim (W dimension).

Type 16, 17, 18, 18R, and 19 wheels (See cone and plug wheels)

Type 27 wheel

An abrasive wheel similar to a Type 1 wheel, but the center of the wheel around the mounting hole is pushed back (depressed). Sometimes called a “depressed center” wheel. It has diameter (D), thickness (U) and hole size (H) dimensions. The depressed center allows grinding on the flat surface of the wheel without interference from the flange or mounting hardware.

Type 27A cutting-off wheel

Similar to a Type 27 wheel. Specifically designed for use on cutting-off machines.

Type 28 wheel

An abrasive wheel similar to a Type 27 wheel, but the face of the wheel is angled upward and away from the mounting hole. The face of a Type 27 wheel is flat and perpendicular to the mounting hole. A Type 28 wheel is also called a “depressed center” wheel. It has diameter (D), thickness (U) and hole size (H) dimensions. The depressed center allows grinding without interference from the mounting. A Type 28 wheel has a saucer-shaped grinding rim and is designed for corner grinding and side grinding.

Type 29 wheel

An abrasive wheel that has reversed, saucer-shaped grinding rims (similar to a partially opened umbrella).

Unitized tooling

A die that has the upper and lower members incorporated into a self-contained unit that holds the die members in alignment.

Upsetters (or forging machines, or headers)

A type of forging equipment, related to the mechanical press, in which the main forming energy is applied horizontally to the workpiece that's gripped and held by prior action of the dies.

Wood products

Wood products include wood and reconstituted wood products that generate chips or dust in the processing of a wood piece.

Notes

Helpful Tools

Ring Test R-3
Abrasive Wheel Illustrations R-7
Wheel types R-7
Flanges R-17
Mounting Type 27A Cutting-off Wheels R-20
Maximum Exposure Angles R-22
Calender Stopping Distances Chart R-28
Mill Stopping Distances Chart R-29

Notes

Ring Test

Use with Machine Safety, Chapter 296-806 WAC

A ring test should be performed before mounting an abrasive wheel. This test is simple and can help determine if the wheel is cracked.

Limitations:

The wheel has to be dry and free of sawdust when applying the ring test, otherwise the sound may be deadened.

The ring test doesn't work with certain wheels because of their shape or size.

Examples include:

- Wheels 4 inches diameter and smaller
- Plugs and Cones
- Mounted Wheels
- Segments
- Plate-Mounted Wheels
- Inserted Nut and Projecting Stud Disc Wheels

How to do the test:

1) Suspend the wheel by putting a small pin or your finger through the arbor hole in the wheel. Heavier wheels may be allowed to rest in a vertical position on a clean hard floor (See Heavy wheel illustration).

2) Tap the flat side of the wheel with a light non-metallic implement, such as the handle of a screw driver, at a point
   - 45 degrees from the vertical center line on each side of the wheel (See Light wheel Illustration)

     and
   - 1 – 2 inches from the edge of the wheel. Large, thick wheels may be struck on the periphery rather than the side of the wheel.

3) Rotate the wheel 45 degrees and repeat the test until the entire wheel has been checked.

-Continued-

Ring Test (continued)

How to use the results:

The ring test depends on the fact that a crack in the wheel will normally change the sound emitted when the wheel is lightly tapped. An undamaged wheel will give a clear tone. If cracked, there will be a dead sound and not a clear ring.

Comparison of the sound with other wheels of the same lot and specification will allow rejection of any wheel with a suspiciously different ring.

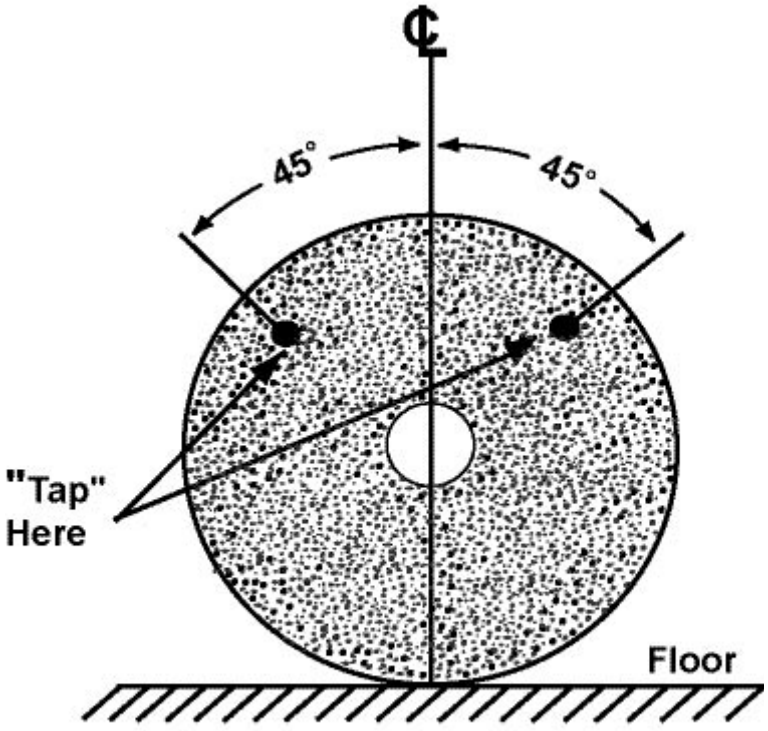

Heavy Wheels

-Continued-

Ring Test (continued)

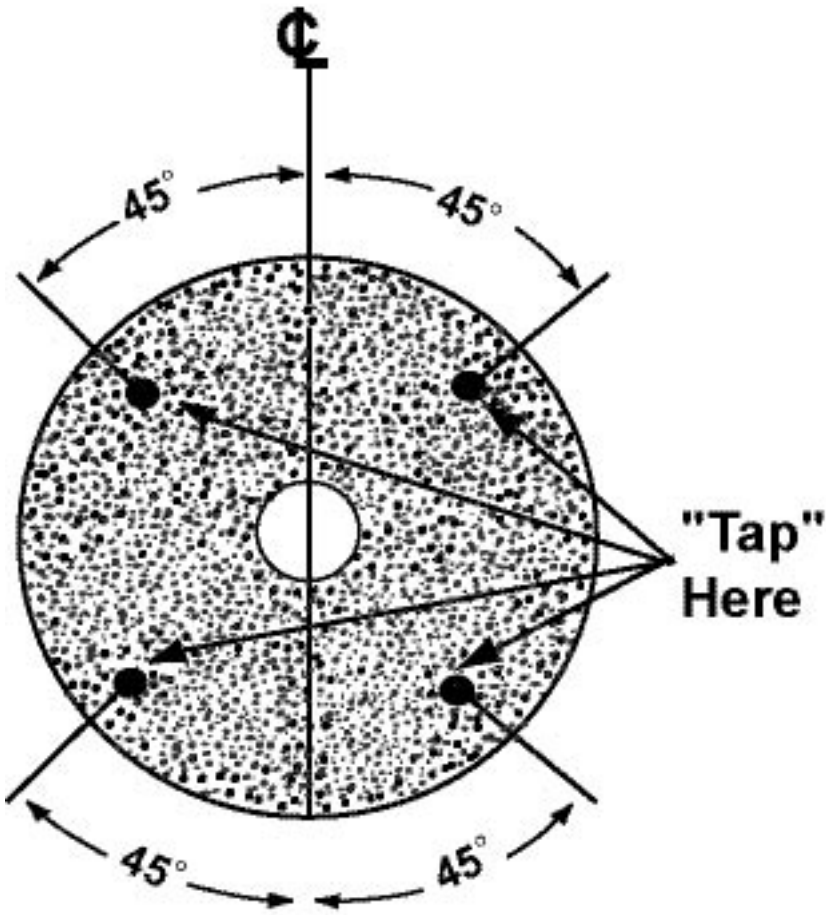

Light Wheels

Notes

Abrasive Wheel Illustrations

Use with Machine Safety, Chapter 296-806 WAC

Abrasive Wheel Illustrations - Wheel Types

This tool contains illustrations of:

- Some specific types of wheels used in this chapter
- General types of flanges used with abrasive wheels
- Mounting of some specific types of wheels
- Maximum exposure angles for safeguarding specific wheels.

Many of the illustrations include definitions to help familiarize you with this type of wheel.

You will find these illustrations in this tool:

Type 1 Wheel R-9

Type 6 Wheel R-10

Type 11 Wheel R-11

Type 27 and 27A Wheels R-12

Type 28 Wheel R-13

Type 29 Wheel R-14

Modified Type 6 and 11 Wheels (Terrazzo) R-15

Mounted Wheels R-16

Cone and Plug Wheels R-17

General Types of Flanges R-18

Mounting Wheels R-20

Mounting Threaded Hole Wheels R-21

-Continued-

Abrasive Wheel Illustrations - Wheels

Use with Machine Safety, Chapter 296-806 WAC

Abrasive Wheel Illustrations - Wheel Types (continued)

You will find illustrations of these maximum exposure angles in this tool:

Bench, Pedestal, and Floorstand Grinders R-23

Bench, Pedestal, and Floorstand Grinders with Contact Below the Level of the Spindle R-23

Cylindrical Grinder R-24

Bench, Pedestal, Floorstand, and Cylindrical Grinder Exposure Angle Adjustment R-24

Surface Grinders and Cutting-off Machines R-25

Swing Frame Grinders R-25

Top Grinding R-26

Resources

Abrasive Wheel Illustrations - Wheels

Use with Machine Safety, Chapter 296-806 WAC

Abrasive Wheel Illustrations - Wheel Types (continued)

Type 1 wheel

An abrasive wheel that is shaped like a disc with a mounting hole in the middle. Sometimes called a “straight wheel.” It has diameter (D), thickness (T), and hole size (H) dimensions. Grinding is normally done on the periphery (outside curve) of the wheel (T dimension).

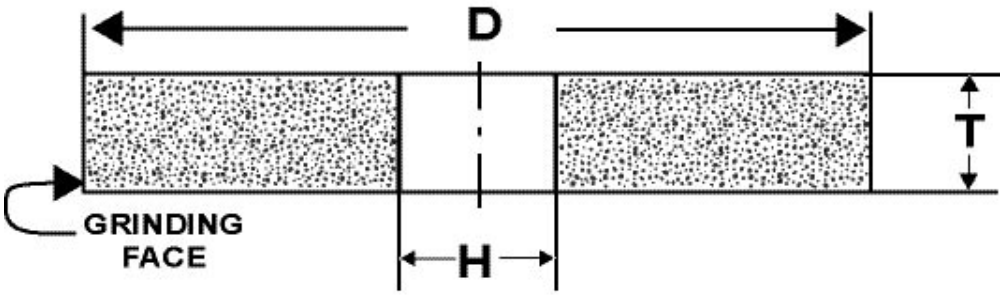

TYPE 1 - STRAIGHT WHEELS

-Continued-

Abrasive Wheel Illustrations - Wheels

Use with Machine Safety, Chapter 296-806 WAC

Abrasive Wheel Illustrations - Wheel Types (continued)

Type 6 wheel

An abrasive wheel that is shaped like a straight-sided cup or bowl with a mounting hole in the bottom of the cup. Sometimes called a “cup wheel.” It has diameter (D), thickness (T), hole size (H), rim thickness (W), and back thickness (E) dimensions. Grinding is normally done on the cup rim (W dimension).

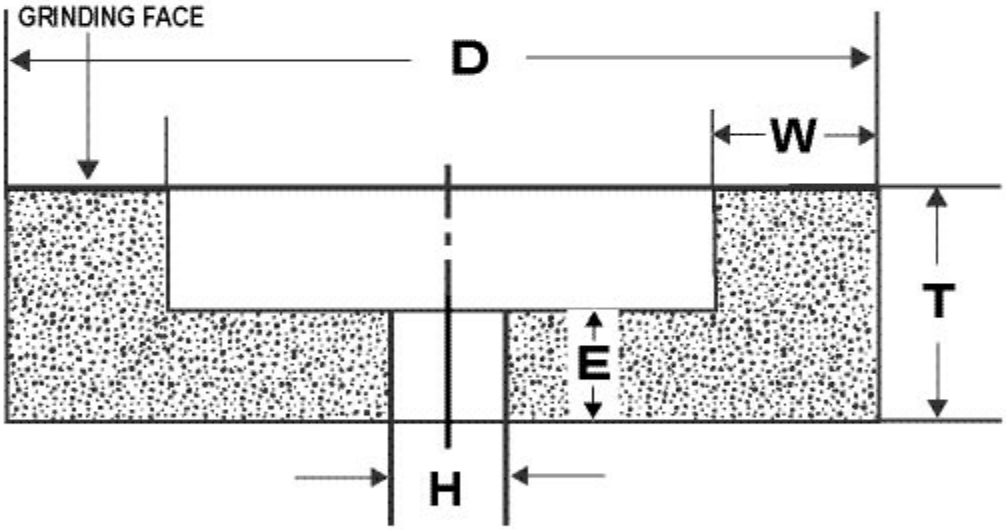

Type 6 Straight Cup Wheel

-Continued-

Abrasive Wheel Illustrations - Wheel Types (continued)

Type 11 wheel

An abrasive wheel that is shaped like a cup or bowl with a mounting hole in the bottom of the cup. The sides of the cup are not straight-sided but are angled outward. Sometimes called a “flaring cup wheel” since the sides are “flared” out. It has double diameter dimensions (top D and bottom J). It also has thickness (T), hole size (H), rim thickness (W) and back thickness (E) dimensions. Grinding is normally done on the cup rim (W dimension).

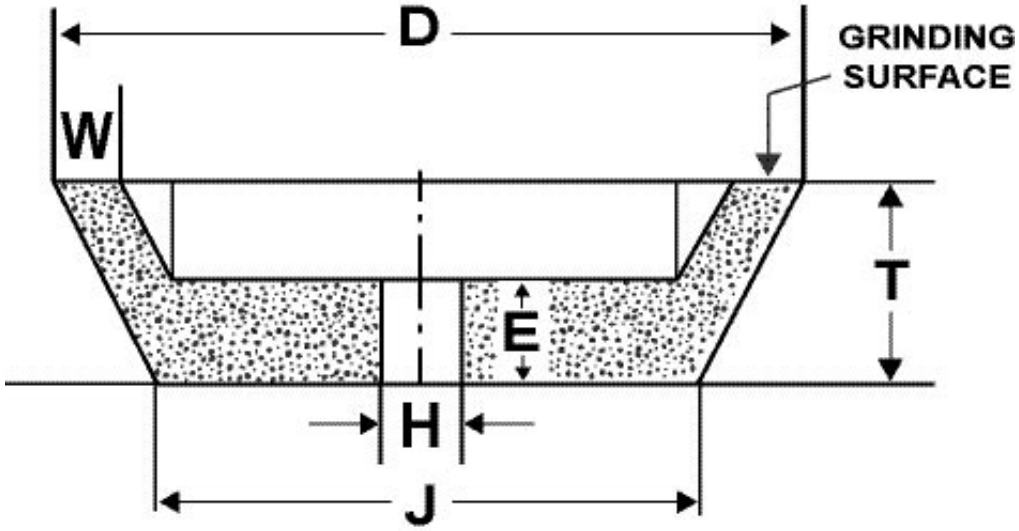

TYPE 11 - FLARING CUP WHEEL

-Continued-

Abrasive Wheel Illustrations - Wheels

Use with Machine Safety, Chapter 296-806 WAC

Abrasive Wheel Illustrations - Wheel Types (continued)

Type 27 wheel

An abrasive wheel that is similar to a Type 1 wheel, but the center of the wheel around the mounting hole is pushed back (depressed). Sometimes called a “depressed center” wheel. It has diameter (D), thickness (U) and hole size (H) dimensions. The depressed center allows grinding on the flat surface of the wheel without interference from the flange or mounting hardware.

Type 27A cutting-off wheel

Similar to a Type 27 wheel. Specifically designed for use on cutting-off machines.

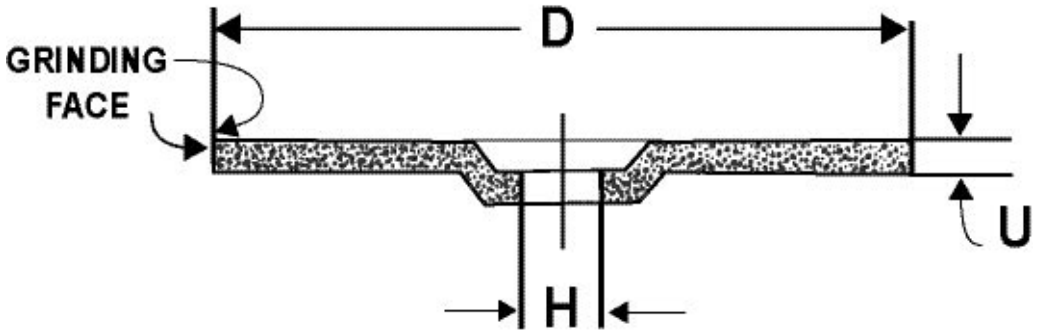

Type 27 and 27A Wheels

Note:

- Type 27 wheels are manufactured with flat grinding rims or faces and are designed for:
  - Side grinding when held at a slight angle to the workpiece
  - Peripheral grinding, including small cutting-off and shallow notching operations
- Type 27 wheels may be used flat when grinding masonry and concrete surfaces such as ceilings and walls.

-Continued-

Abrasive Wheel Illustrations - Wheel Types (continued)

Type 28 wheel

An abrasive wheel that is similar to a Type 27 wheel, but the face of the wheel is angled upward and away from the mounting hole. The face of a Type 27 wheel is flat and perpendicular to the mounting hole. A Type 28 wheel is also called a "depressed center" wheel. It has diameter (D), thickness (U) and hole size (H) dimensions. The depressed center allow grinding without interference from the mounting. A Type 28 wheel has a saucer-shaped grinding rim and is designed for corner grinding and side grinding.

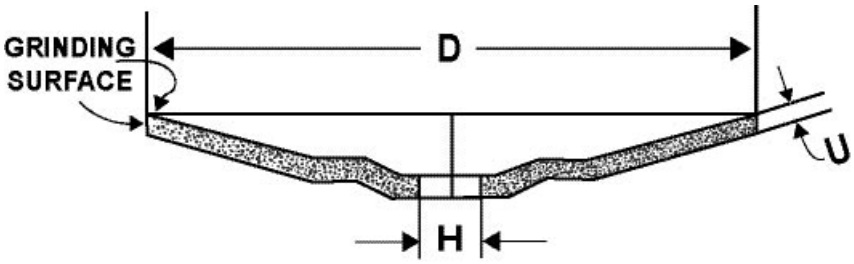

Type 28 Wheel

-Continued-

Abrasive Wheel Illustrations - Wheels

Use with Machine Safety, Chapter 296-806 WAC

Abrasive Wheel Illustrations - Wheel Types (continued)

Type 29 wheel

An abrasive wheel that has reversed, saucer-shaped grinding rims (similar to a partially opened umbrella). It has diameter (D), thickness (U) and hole size (H) dimensions.

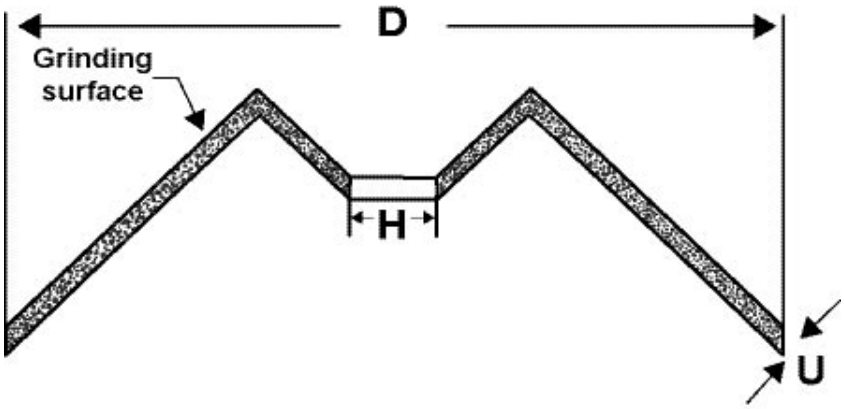

Type 29 Wheel

-Continued-

Abrasive Wheel Illustrations - Wheel Types (continued)

Modified Type 6 and 11 wheels (Terrazzo)

Similar to Type 6 “straight cup” wheels and Type 11 “flaring cup” wheels except for the bottom of the cup. The bottom of the cup is flat in Type 6 and 11 wheels. The modified wheels have bottoms that are sloped downwards towards the mounting hole. These modified wheels need to be mounted using a special tapered flange furnished by the tool manufacturer. These wheels are used in the terrazzo trade.

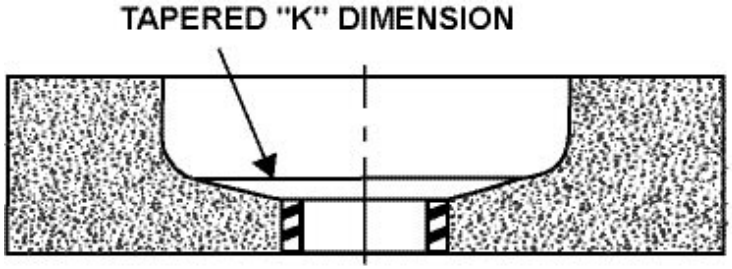

TYPE 6 WHEEL (TERRAZZO)

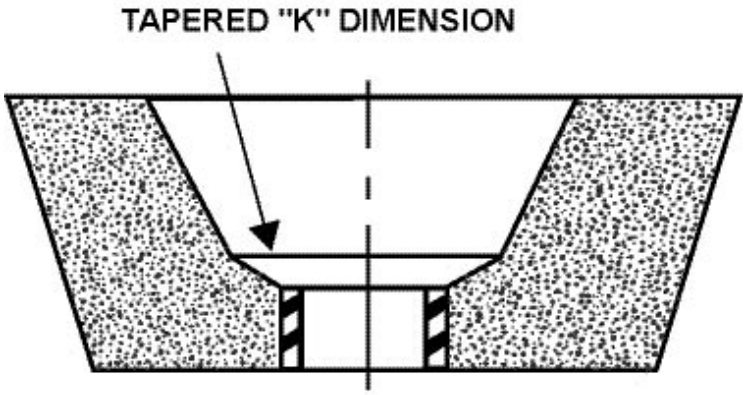

TYPE 11 WHEEL (TERRAZZO)

-Continued-

Abrasive Wheel Illustrations - Wheels

Use with Machine Safety, Chapter 296-806 WAC

Abrasive Wheel Illustrations - Wheel Types (continued)

Mounted wheels

Bonded abrasive wheels of various shapes, usually 2 inches diameter or smaller, that are secured to plain or threaded steel mandrels.

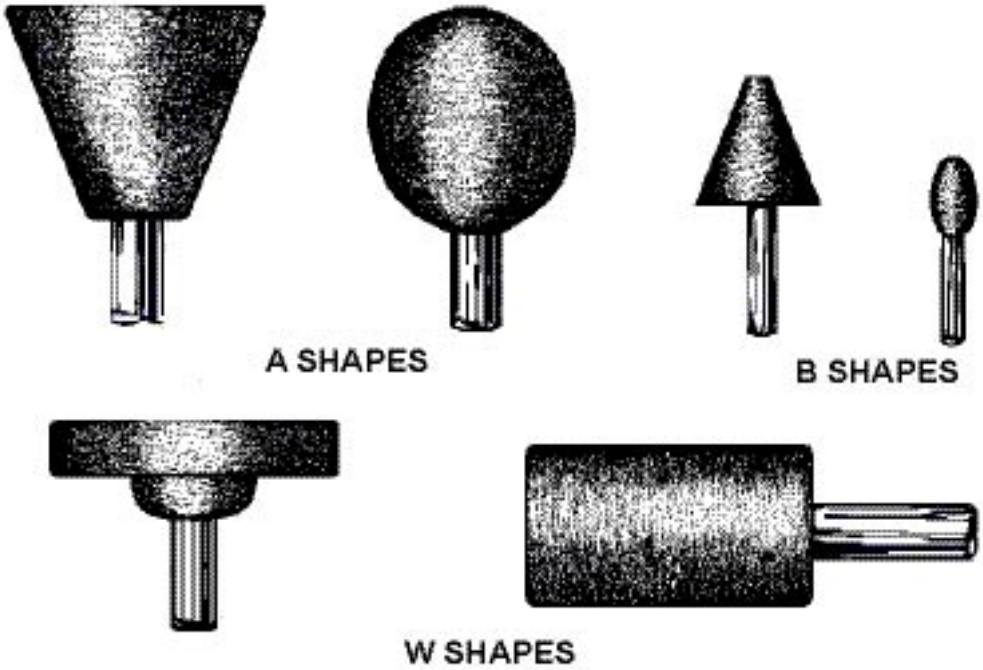

MOUNTED WHEELS

-Continued-

Abrasive Wheel Illustrations - Flanges

Use with Machine Safety, Chapter 296-806 WAC

Abrasive Wheel Illustrations - Wheel Types (continued)

Cone and plug wheels (Types 16, 17, 18, 18R, and 19)

Abrasive wheels manufactured with blind hole threaded bushings. They may be used on all surfaces except the flat mounting surface (D). Specific characteristics of the different cone and plug wheels are:

- Type 16 cone wheels have a curved side with a nose radius
- Type 17 cone wheels have straight sides with or without a nose radius
- Type 18 and 18R plug wheels are cylindrical in shape with either a square or curved grinding end
- Type 19 cone wheels are a combination of cone and plug shapes

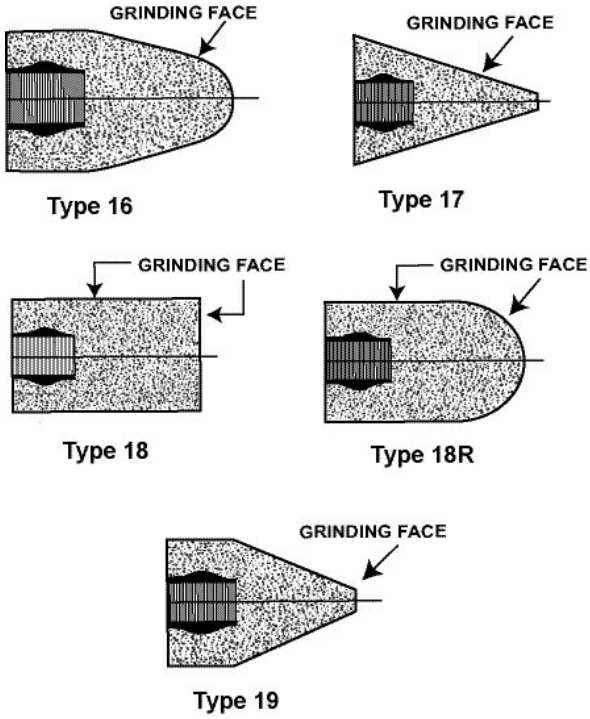

Cone and Plug Wheels

-Continued-

Resources

Abrasive Wheel Illustrations - Flanges

Flanges

Collars, discs or plates between or against which wheels are mounted. There are four types of flanges:

- Adaptor
- Sleeve adaptor
- Straight relieved
- Straight unrelieved

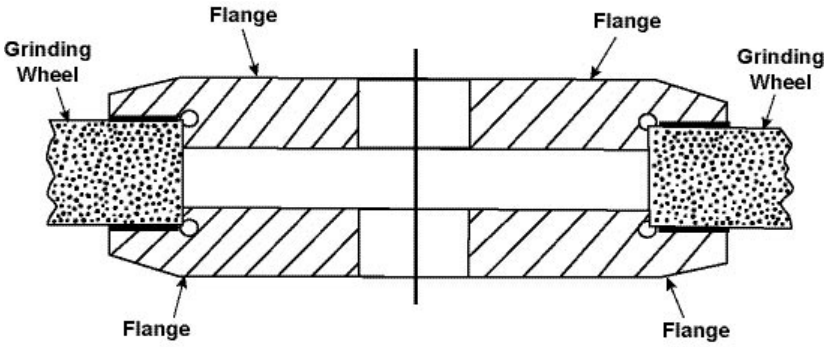

Adaptor Flange

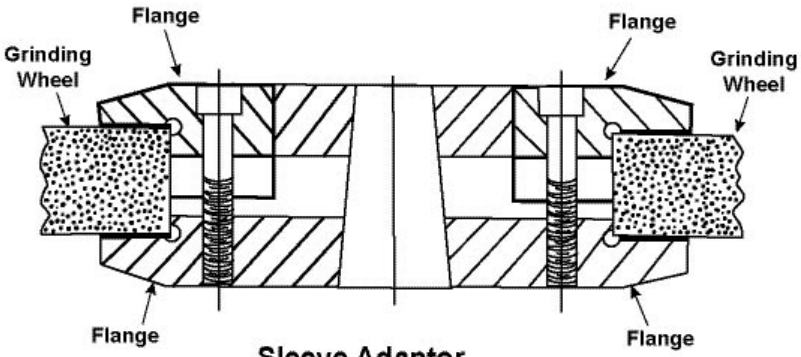

Sleeve Adaptor Flange

-Continued-

Abrasive Wheel Illustrations - Flanges (continued)

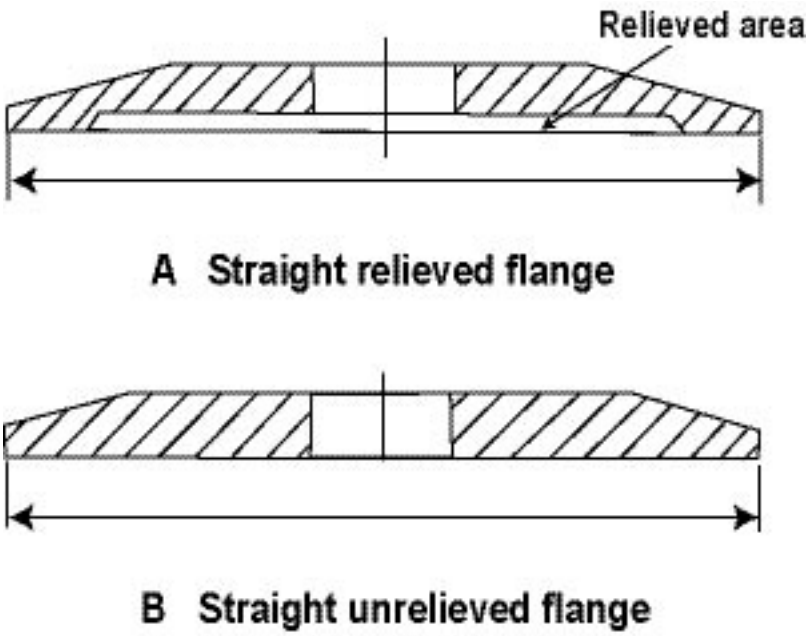

-Continued-

Abrasive Wheel Illustrations - Flanges (continued)

Mounting Type 27A cutting-off wheels

Type 27A cutting-off wheels are mounted between flanges that are:

- Flat (unrelieved) with matching bearing surfaces

  and

- At least 1/4 the wheel diameter

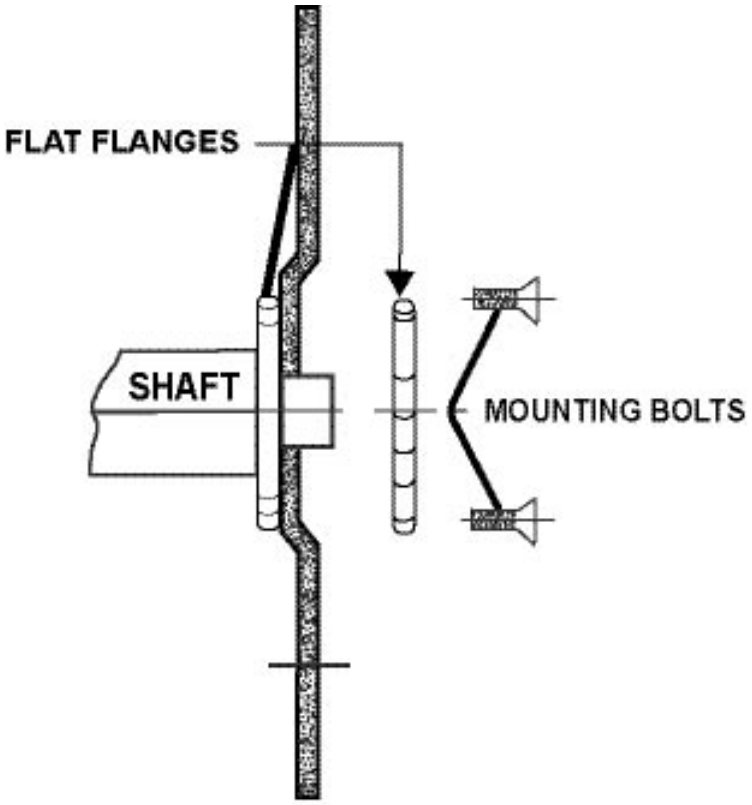

Mounting Type 27A
Cutting-off Wheels

-Continued-

Abrasive Wheel Illustrations - Flanges

Use with Machine Safety, Chapter 296-806 WAC

(continued)

Mounting threaded hole wheels

Threaded hole wheels are mounted against a back flange that is:

- Flat (unrelieved)
- Securely fastened and square to the spindle axis
- Able to properly support the wheel

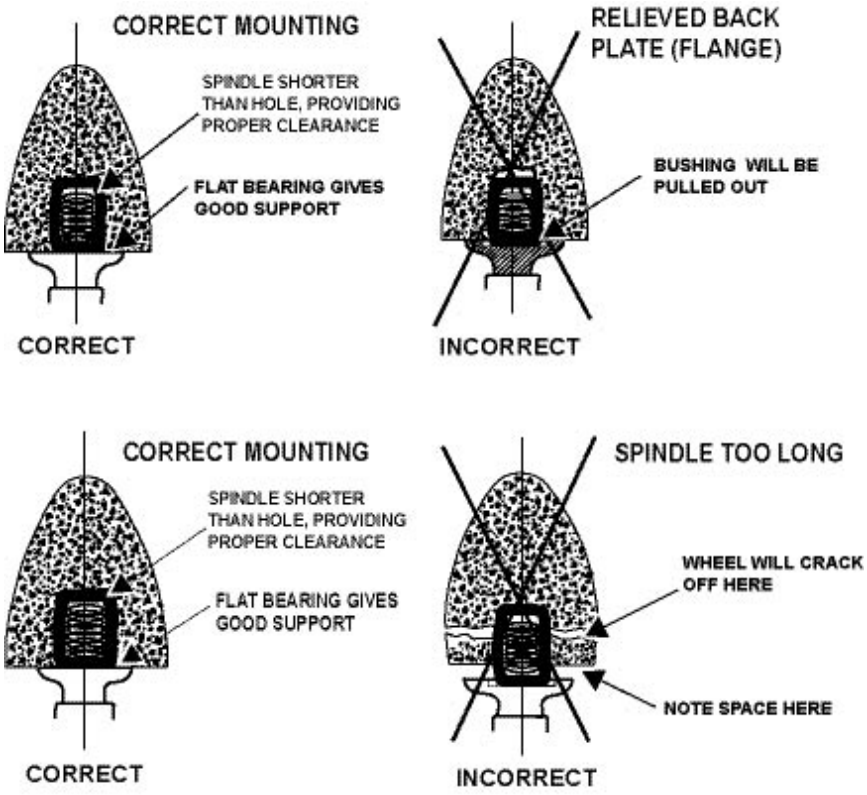

Resources

Abrasive Wheel Illustrations

Use with Machine Safety, Chapter 296-806 WAC

Abrasive Wheel Illustrations – Maximum Exposure Angles

The following illustrations provide a visual reference for many of the guarding requirements for specific types of machines. Descriptions beneath the illustrations sometimes include specific application requirements.

-Continued-

Abrasive Wheel Illustrations

Use with Machine Safety, Chapter 296-806 WAC

Abrasive Wheel Illustrations – Maximum Exposure Angles (continued)

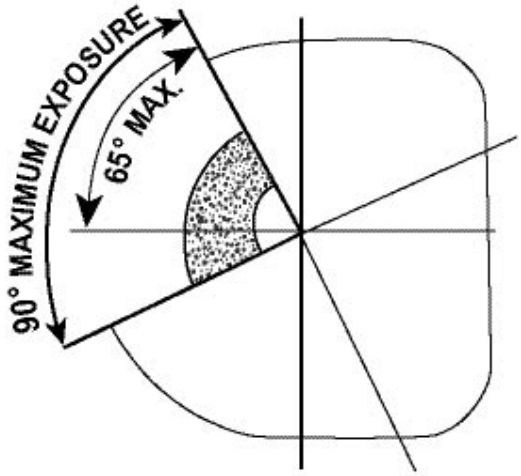

Bench, pedestal, and floorstand grinders

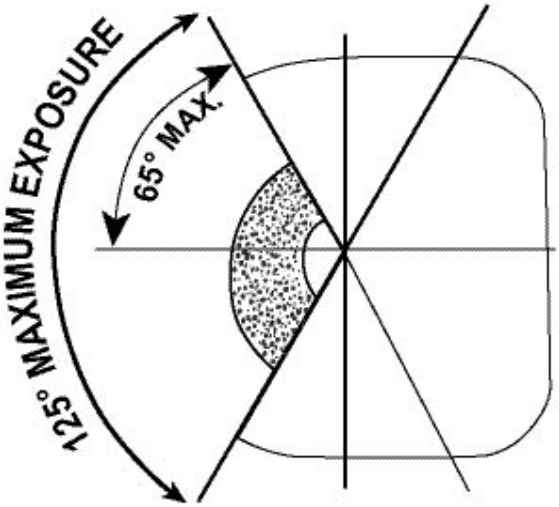

Bench, pedestal, and floorstand grinders with contact below the level of the spindle

-Continued-

Resources

Abrasive Wheel Illustrations

Use with Machine Safety, Chapter 296-806 WAC

Abrasive Wheel Illustrations – Maximum Exposure Angles (continued)

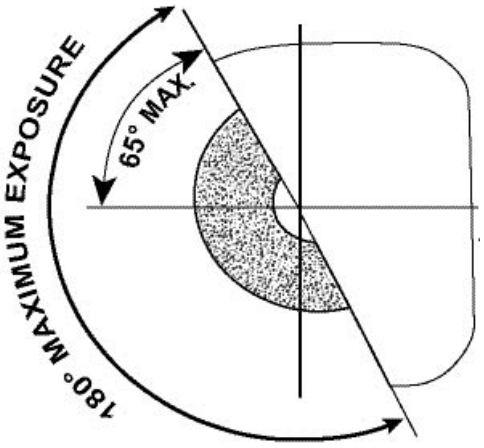

Cylindrical grinder

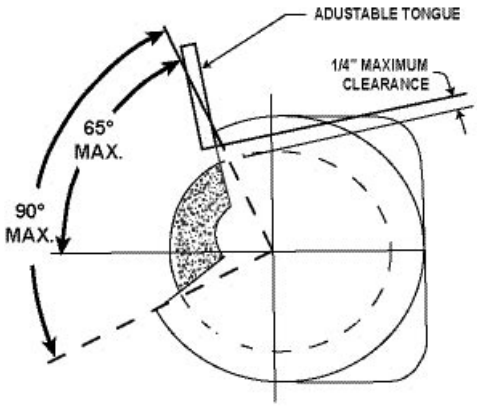

Bench, pedestal, floorstand, and cylindrical grinder exposure angle adjustment

-Continued-

Abrasive Wheel Illustrations

Use with Machine Safety, Chapter 296-806 WAC

Abrasive Wheel Illustrations – Maximum Exposure Angles (continued)

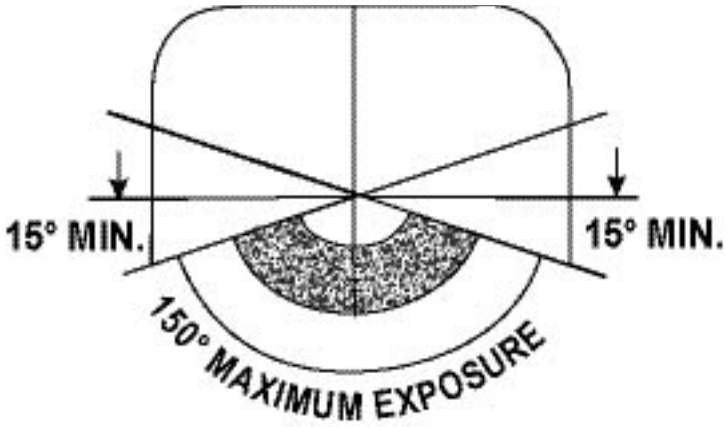

Surface grinders and cutting-off machines

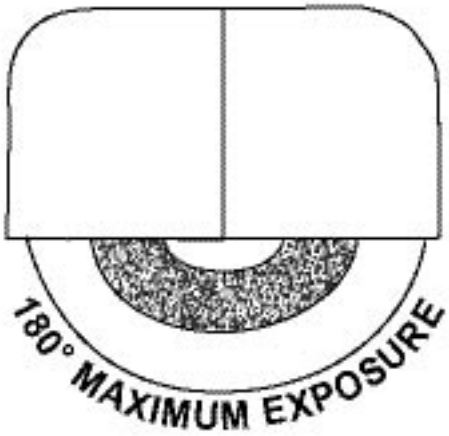

Swing frame grinders

-Continued-

Resources

Abrasive Wheel Illustrations

Use with Machine Safety, Chapter 296-806 WAC

Abrasive Wheel Illustrations – Maximum Exposure Angles (continued)

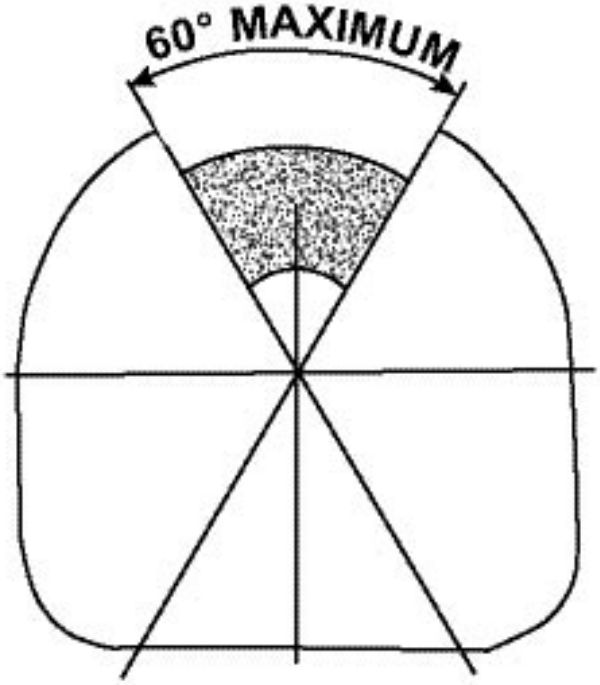

Top grinding

Resources

Calender Emergency Stopping Distance

Use with Machine Safety, Chapter 296-806 WAC

This tool will allow you to determine if your calender meets the emergency stopping distance required by the rule. The size or arrangement of the rolls doesn't matter--they all have to stop within the specified limits unless there is no employee exposure to the hazard.

- You need to know the roll surface speed to use the chart. The roll surface speed is the distance (in feet) a point on the peripheral surface of the roll travels in one minute. You can determine the roll surface speed as follows:

Roll Surface Speed (feet per minute) = .262 x Roll Diameter (inches) x rpm

Examples:

- 24-inch diameter roll, 15 revolutions per minute.
  Roll surface speed = .262 X 24 X 15 = 94.32 feet per minute
- 12-inch diameter roll, 40 revolutions per minute.
  Roll surface speed = .262 X 12 X 40 = 125.76 feet per minute

Step 1: Find the roll surface speed (in feet per minute) on the horizontal axis of the chart (on the bottom).

Step 2: Draw a vertical line from the roll surface speed until it meets the sloped line between the shaded and un-shaded areas of the chart.

Step 3: Draw a horizontal line from that point to the vertical axis (on the left side) and read the maximum acceptable stopping distance.

Examples:

- A calender has a no-load roll surface speed of 125 feet per minute.
  The maximum stopping distance allowed is $26^1/_2$ inches
- A calender has a no-load roll surface speed of 100 feet per minute.
  The maximum stopping distance allowed is 21 inches.

Calender Emergency Stopping Distance

Use with Machine Safety, Chapter 296-806 WAC

Calender Stopping Distances Chart

The shaded area of the chart below shows acceptable stopping distances for calenders. These distances are measured:

- With the rolls running empty at maximum operating speed.
- In inches of roll surface traveled
- From the instant the emergency stopping device is activated.

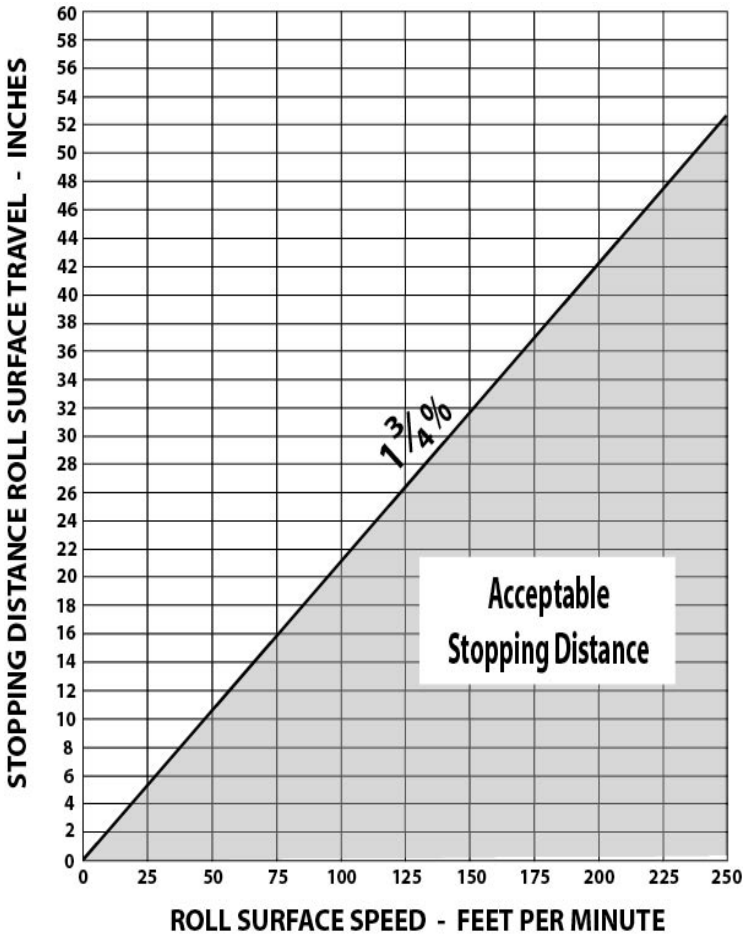

Mill Emergency Stopping Distance

Use with Machine Safety, Chapter 296-806 WAC

This tool will allow you to determine if your mill meets the emergency stopping distance required by the rule. The size or arrangement of the rolls doesn't matter--they all have to stop within the specified limits unless there is no employee exposure to the hazard.

- You need to know the roll surface speed to use the chart. The roll surface speed is the distance (in feet) a point on the peripheral surface of the roll travels in one minute. You can determine the roll surface speed as follows:

Roll Surface Speed (feet per minute) = .262 x Roll Diameter in Inches x rpm

Examples:

- 24-inch diameter roll, 15 revolutions per minute.
  Roll surface speed = .262 X 24 X 15 = 94.32 feet per minute
- 12-inch diameter roll, 40 revolutions per minute.
  Roll surface speed = .262 X 12 X 40 = 125.76 feet per minute

Step 1: Find the roll surface speed (in feet per minute) you calculated in Step 1 on the horizontal axis of the chart (on the bottom).

Step 2: Draw a vertical line from the roll surface speed until it meets the sloped line between the shaded and un-shaded areas of the chart.

Step 3: Draw a horizontal line from that point to the vertical axis (on the left side) and read the maximum acceptable stopping distance.

Examples:

- A mill has a no-load roll surface speed of 125 feet per minute.
  The maximum stopping distance allowed is $22^1/_2$ inches
- A mill has a no-load roll surface speed of 100 feet per minute.
  The maximum stopping distance allowed is 18 inches.

-Continued-

Mill Emergency Stopping Distance

Use with Machine Safety, Chapter 296-806 WAC

Mill Stopping Distances Chart (continued)

Acceptable stopping distances for mills are those less than or equal to 1-1/2 % of the fastest speed at which they operate when empty. The size or arrangement of the rolls doesn't matter--they all have to stop within the specified limits unless safety guarding eliminates employee exposure to the hazard.

The shaded area of the chart below shows stopping distances that are acceptable for Mills. These distances are measured:

- With the rolls running empty at maximum operating speed.
- In inches of surface travel of the roll.
- From the instant the emergency stopping device is activated

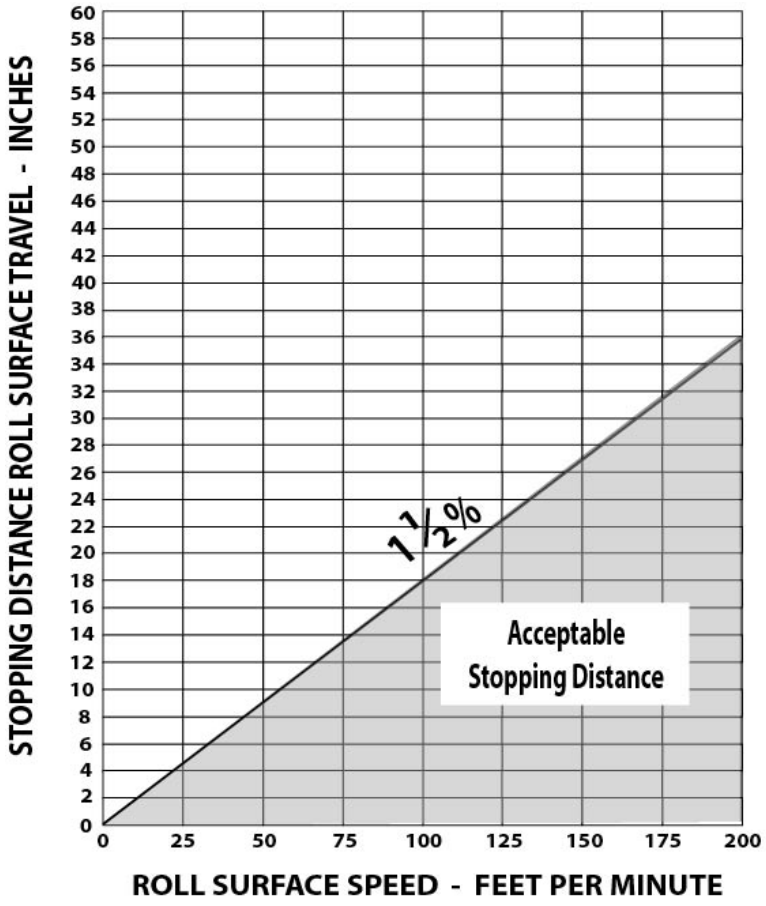

Index

A

Abrasive wheels
- *(See also* Requirements for all machines)
- all requirements, **405**-5-16
- blotters, **405**-16
- definitions, **500**-1-23
- design and construction, **405**-5
- flanges, **405**-13-15; **500**-8
- guard requirements, **405**-6-8
- mounting, **405**-12
- ring test, **405**-11
- tongue guard, **405**-9; **500**-20
- types and illustrations, helpful tool, **R**-7
- use, **405**-11
- work rest, for off-hand grinding, **405**-10

Access
- mobile conveyors, **420**-21
- doors and covers, compactors, **415**-4
- conveyors, safety, **420**-8

Adjustable barrier guard, mechanical power presses, **455**-9
Adjusting or repairing machinery, **200**-7
Air conditioning units, food processing, **425**-7
Alterations, conveyors, **420**-9
ANSI requirements
- chipper mills, **480**-31
- forging machines, pressure pipes, **430**-12
- mechanical power presses, **455**-5

Antifriction-bearing casters, food processing equipment, **425**-15
Arbors and mandrels, fitting, **300**-1
Automatic cycling controls, compactors, **415**-4
Automatic saws, **480**-16

B

Backstop, or anti-runaway devices, conveyors, **420**-9
Bag lifts (bag arm elevators), **425**-11
Bakery slicers, food processing, **425**-14
Bakery wrapping machines, food processing equipment, **425**-14-15
Band saws, **480**-27
Barrels, revolving, safeguarding, **300**-16
Barricades, safe distance from hazard, **200**-22-24
Barrier guards
- all requirements, **200**-13-15
- devices, **200**-21
- mechanical power press, **455**-9

Bearings
- power transmission equipment, **200**-8
- supports, belt or rope drives, **300**-5

Belt, rope, or pulley drives
- all, **300**-2-8
- conveyors, **420**-14-16

Belt sanders, safeguarding methods, **475**-4
Blotters, abrasive wheels, **405**-16
Board hammers, forging machines, **430**-12
Bolts, protruding on moving surfaces, **200**-12
Boring machines, saws and cutting heads, **480**-30
Box and roll-type dough sheeters, **425**-31
Bread coolers, rack-type, **425**-7
Burrs, moving surfaces, **200**-12

C

Calenders, **410**-2-4; **R**-29
- *(See also* Requirements for all machines)

Cams, safeguarding, **300**-9
Chain and sprocket drives, safeguarding, **300**-10
Chain conveyors, **420**-17-18
Chain tackle, food processing, **425**-12
Chapter application, scope, **100**-1
Chip control and handling, lathes, **450**-4
Chipper and hog mills, **480**-32
Chipper mills, saws and cutting heads, **480**-31
Chocolate melting, refining, and mixing, food processing equipment, **425**-22
Chucks *(See* work-holding devices (chucks)*)*
Chutes
- conveyors, **420**-12
- food processing, **425**-11

Circular resaws, **480**-15
Circular saws
- *(See also* Requirements for all machines)
- all, **480**-9-15
- gages, **480**-9
- guarding hand-fed saws, exemption, **480**-10
- miter, **480**-17-18
- radial, **480**-19-21
- ripping (definition), **500**-17
- ripsaws, hand-fed, **480**-12-13
- meat cutting, food processing, **425**-23
- circular, requirements for all, **480**-9-15
- self-feed, **480**-14
- swing (jump) saws, **480**-16-17

Clearances, towed conveyors, **420**-27

Index

Clothing requirements when lubricating moving machinery, **200**-9
Clutch handle, belt shifter, **300**-6-8
Collars, revolving, **300**-19
Comb, **480**-7
Compactors
- *(See also* Requirements for all machines)
- all, **415**-1-4
- automatic cycling controls, **415**-4
- controls, **415**-3
- doors, access and covers, **415**-4
- general requirements, **200**-1-25; **300**-1-19
- operations, **415**-2
- stationary, **415**-2

Connecting rods, safeguarding, **300**-9
Containers, revolving, safeguarding, **300**-16
Controls
- calenders, safety, **410**-2-3
- compactors, **415**-3-4
- emergency stop, **200**-4
- foot operated, **200**-4
- machine vibration, **200**-5
- operating, **200**-3

Conveyors
- *(See also* Requirements for all machines)
- access, safe, **420**-8
- all, **420**-1-28
- alterations, **420**-9
- backstop, or anti-runaway devices, **420**-9
- chain, **420**-17-18
- chutes, **420**-12
- controls, labeling, **420**-7
- design and construction, **420**-6
- elevator, **420**-18
- emergency stops, **420**-6-7
- food processing, **425**-12-13
- guards, spill, **420**-10
- guideposts, **420**-13
- hoppers, **420**-12
- inspection, **420**-9
- mobile, **420**-20-21
- overland belt, **420**-15-16
- projections, marking, **420**-28
- pusher-bar, **420**-21
- replacing parts, **420**-10
- riding, prohibiting, **420**-8
- roller, **420**-22-23
- screw, **420**-24
- shakers, **420**-19
- shuttle, **420**-19
- skip hoists, **420**-25
- slat and roller-slat, **420**-26
- spill guards, **420**-10
- towed, **420**-26-28

Counterweights, safeguard, **300**-19
Coverings, lathes, **450**-6
Coverings, storage bins, food processing, **425**-10
Cross-roll brakes, food processing, **425**-17
Cutting heads
- *(See also* Requirements for all machines)
- all requirements, **480**-1-42
- boring machines, **480**-30
- chipper mills, **480**-31
- general requirements, for all, **480**-29
- hog mills, **480**-32
- jointers, **480**-33-34
- matching machines, **480**-34
- molding machines, **480**-34
- mortising machines, **480**-30
- panel raisers & other similar machines, **480**-35
- planers, **480**-35-37
- shapers, **480**-38
- sticking machines, **480**-34
- tenoning machines, **480**-39
- veneer machines, **480**-40-42

Cylinder draining, forging machines, **430**-11
Cylinder grinder, abrasive wheels, **405**-9
Cylinder head, forging machines, **430**-10

D

Dadoing, saws and cutting heads, **480**-7
Definitions, all, **500**-1-23
Design and construction
- abrasive wheels, **405**-5
- conveyors, **420**-6; **425**-13
- jointers, **480**-33-34
- mechanical power presses, **455**-5
- ovens, **425**-28
- pulleys, **300**-15-16

Detector, mobile conveyors, **420**-21
Devices
all requirements, **200**-16-21
barrier guards, **200**-21
light curtains, **200**-17
mechanical power presses, **455**-10-11, 14-16
pressure-sensitive mats, **200**-18
restraint or pullback, **200**-19
two-hand, **200**-20
Die keys and shims, forging machines, **430**-10
Die machine, food processing, **425**-30
Dies, mechanical power presses, **455**-19-20
Disk sanders, sanding machines, safeguarding methods, **475**-2
Distance
all machines, **200**-22-24
from hazard to guard (A), *illustration*, **200**-15
safe, press brakes, **465**-4-8
Dividers, food processing equipment, **425**-16
Double arbor saws, **480**-24
Dough-related equipment, food processing
brakes, **425**-17-18
mixers (horizontal), **425**-24-25
sheeters, box and roll-type, **425**-31
Doughnut machines, food processing equipment, **425**-18
Drag saws, **480**-28
Drilling/boring machine, **480**-30; **500**-7
Drip cups and pans, securing, **200**-9
Drum sanders, sanding machines, **475**-3
Drums, revolving, safeguarding, **300**-16
Dumpbin and blenders, food processing, **425**-19

E

Elevator conveyors, **420**-18
Emergency stop controls
all machines, **200**-4
belt conveyors, **420**-15
conveyors, general requirements, **420**-6
ovens, food processing, **425**-29
Employee protection
adjusting, repairing machinery, **200**-7
belt and pulley drives, **300**-6
chipper mills, **480**-31
falling objects, **200**-11
flying objects, **200**-11
hazards, **200**-1
hog mills, **480**-32
lubricating moving machinery, **200**-9
machinery, **200**-1
moving surfaces with hazards, **200**-12
nip or shear point, **200**-10
point of operation, **200**-10
reciprocating or other moving parts, **200**-11
rotating or revolving parts, **200**-11
unintentional machine operation, **200**-4
Emulsifiers, premixers, and similar machines, food processing equipment, **425**-21
Equipment, overspeed, **200**-5
Exemptions
belt and rope drives, safeguarding methods, **300**-2
belt shifter, **300**-6
boring and mortising machines, **480**-30
calenders, 410-2
chain guards, **300**-10
chipper mills, **480**-31
circular saws, guarding, **480**-12-13
drum sanders, **475**-3
fan blades, **300**-11
flywheels, **300**-12
food processing equipment, **425**-10
gears, **300**-13
projections on moving parts, **300**-14
pulleys, **300**-15
sewing machine needles, **485**-1-2
shafting, safeguarding methods, **300**-17
spreaders, **480**-15
storage bins, **425**-10
Extension piping, food processing equipment, **425**-8
Extension piston rods, safeguarding, **300**-9

F

Facilities, food processing equipment
(See also Requirements for all machines)
exposed hot pipes, **425**-8
fermentation room, **425**-7
locks, chamber doors, **425**-7
lubrication fittings, stationary, **425**-8
pan washing tanks, exemption, **425**-8
proof boxes, **425**-9
rack-type bread coolers, **425**-7
storage bins, **425**-10

Index

Falling objects, **200**-11
Fan blades safeguard, **300**-10-11
Fat kettles, food processing equipment, **425**-10, 22
Featherboard, **480**-7; **500**-7
Feed rolls, planers, **480**-36
Feed rolls, sanding machines, **475**-4
Fences
- definition, **500**-7
- saws and cutting heads, **480**-33

Fermentation room, food processing equipment, **425**-7
Fixed barriers, safeguarding by distance, **200**-23
Flanges, abrasive wheels, **405**-13-15
Floor coverings, **200**-1
Floorstand grinders, abrasive wheels, **405**-9
Flour-handling machines, food processing, **425**-20
Flour scales, food processing, **425**-20
Flour sifters, food processing, **425**-31
Flying objects
- all machines, **200**-11
- safeguarding, **200**-11

Flywheels, safeguarding, **300**-12
Food grinders and cutters, **425**-21
Food processing equipment
- *(See also* Requirements for all machines)
- air conditioning units, **425**-7
- all, **425**-1-32
- bag lifts (bag arm elevators) **425**-11
- bakery slicers, **425**-14
- bakery wrapping machines, **425**-14-15
- bread coolers, rack-type, **425**-7
- chain tackle, **425**-12
- chocolate melting, refining, and mixing machines, **425**-22
- chutes, **425**-11
- conveyors, **425**-12-13
- cross-roll brakes, **425**-17
- design and construction, **425**-28
- dividers, **425**-16
- dough brakes, **425**-17-18
- dough sheeters, box and roll-type, **425**-31
- dough mixers, horizontal, **425**-24-25
- doughnut machines, ventilation, **425**-18
- dumpbin and blender, **425**-19
- emergency stop controls, **425**-29
- fat kettles, **425**-10, 22
- fermentation room, **425**-7
- flour-handling machines, **425**-20
- flour scales, **425**-20
- flour sifters, **425**-31
- food grinders and cutters, **425**-21
- hand trucks, **425**-13
- lubrication fittings, **425**-8
- manually-fed dough and cross-roll brakes
- safeguarding methods, **425**-17
- material handling bag lifts (bag arm elevators) design and construction, **425**-11
- meat-processing equipment (circular meat-cutting saws), **425**-23
- moulders, hand-fed, **425**-28
- moulders, mechanical-feed, **425**-27
- ovens, **425**-28-29
- pallet jacks & hand trucks, **425**-13
- pan-washing tanks, **425**-8
- peanut-cooling trucks, **425**-30
- pipes, hot & exposed, **425**-8
- premixers, emulsifiers, and other similar machines, **425**-21
- pretzel rolling, **425**-30
- proof boxes, **425**-9
- pulverizers, sugar & spice, **425**-32
- requirements for all machines, **200**-1-25; **300**-1-19
- reversible dough brakes, **425**-18
- screw conveyors (augers), **425**-13
- stationary lubrication fittings, **425**-8
- steam kettles, **425**-22
- storage bins, **425**-10
- track-type flour scales, **425**-20
- troughs, **425**-15
- vertical mixers, **425**-26

Foot-operated controls, **200**-4
Forging machines
- *(See also* Requirements for all machines)
- all, **430**-1-13
- ANSI requirements, pressure pipes, **430**-12
- board hammers, securing, **430**-12
- cylinder draining, **430**-11
- cylinder head, **430**-10
- die keys and shims, **430**-10
- hammers, **430**-5, 8,10-12
- inspection and maintenance, **430**-5

lead and lead casts, **430**-4
presses, **430**-5, 8
pressure pipes, **430**-12
saws, sparks, **430**-13
scale, removing, **430**-8
shut-off valve, **430**-11
specific requirements, table **430**-3
strengths and dimensions, table, **430**-6
tongs, **430**-7
valves and switches, **430**-9

G

Gages, circular saws, **480**-9
Garbage (waste) disposal equipment, **435**-1-2
Gears, requirements for all machines, **300**-13
Glue spreaders, **440**-1-2
General requirements
abrasive wheels, **405**-5-10
circular saws, all, **480**-9-15
conveyors, **420**-6-13
cutting heads, **480**-29
forging machines, **430**-4-9
machines, all, **200**-1-9
saws, **480**-8
saws & cutting heads, all, **480**-7
Gloves, machinery, **200**-19
Glue spreaders, **440**-1-2
Grating, shuttle conveyors, **420**-19
Grease guns, **200**-9
Grooving, saws and cutting heads, **480**-7
Guard openings, safeguarding methods, **200**-14
Guard radial saws, illustration, **480**-20
Guard requirements, table, **405**-8
Guarding
chain conveyors, **420**-18
pusher bar conveyors, **420**-21
nip points, roller conveyors, **420**-23
wheels and rails, mobile conveyors, **420**-20
Guardrails
abrasive wheels, **405**-6-8
general requirements, all machines, **200**-13-15
safeguarding by distance, **200**-25
spill, conveyors, **420**-10
tongue, abrasive wheels, **405**-9
used for safeguarding, **200**-25
Guards
abrasive wheels, **405**-6-9
all machines, **200**-13-15
barrier, **200**-21
conveyors, **420**-10
dough brakes, food processing equipment, **425**-18
glue spreaders, **440**-1-2
mechanical power presses, **455**-8-9
metal lathes, **450**-3
Guideposts, conveyors, **420**-13
Guide posts, mechanical power presses, **455**-6
Guillotine cutters, **480**-41-42

H

Hammers, forging machines, **430**-5-8
Hand-feeding and retrieval tools, **200**-6
Hand trucks, food processing, **425**-13
Hazards
circular saws, **480**-16
definition, **500**-10
drag saws, **480**-28
employee protection, **200**-1
falling objects, **200**-11
flying objects, **200**-11
guideposts, mechanical power presses, **455**-6
mobile conveyors, **420**-20
moving surfaces, **200**-12
nip or shear point, **200**-10
point of operation, **200**-10
reciprocating or other moving parts, **200**-11
rotating or revolving parts, **200**-11
slipping, **200**-1
work areas, **200**-2
Hog, definiton, **500-**10
Hog mills, **480**-32
Helpful tools
abrasive wheel illustrations, **R**-7
calender stopping distance chart, **R**-29
mills stopping distance chart, **R-**33
ring test, **R**-3
Hoists, skip, **420**-25
Hoppers and chutes, conveyors, **420**-12
Horizontal cutting head, planers, **480**-35
Horizontal dough mixer, food processing,

Index

425-24-25
Horizontal lathes, **450**-5
Hot pipes, food processing equipment, **425**-8

I

Illustrations
- distance from hazard to guard (A), **200**-15
- guard radial saws, **480**-20
- how to measure variables for table **200**-24
- miter saw guarding, **480**-18
- return-belt idlers, **420**-14
- ripping with a radial arm saw, **480**-23

Inclined reciprocating conveyors (shakers), loading, **420**-19
Inspection
- conveyors, **420**-9
- ovens, **425**-29
- power transmission parts, **200**-8
- press brakes, **465**-7

Inspection and maintenance
- forging machines, **430**-5
- mechanical power presses, **455**-23

Interlocked barrier guard, mechanical power presses, **455**-9
Intermediate rail, guardrails, **200**-25
Inverted swing (jump) saws, **480**-16-17
Ironworkers
- *(See also* Requirements for all machines)
- adjustable restrictors, **445**-2
- all, **445**-2
- point of operation, **445**-2

J

Jointers, **480**-33-34

K

Kettles, food processing
- chocolate melting, refining, & mixing, **425**-22
- fat, **425**-22
- steam, **425**-22

Keys on moving parts, **300**-14
Keyways, unused, **300**-18
Kickback protection
- circular saws, hand-fed, **480**-12-13
- planers, **480**-37
- radial saws, **480**-22-23

Knives and cutting heads, **480**-29

L

Labeling, controls
- compactor, **415**-3
- conveyors, **420**-7

Lathes
- *(See also* Requirements for all machines)
- all, **450**-1-7
- metal, **450**-3-5
- woodworking, **450**-6-7

Lead and lead casts, forging machines, **430**-4
Light curtains, **200**-17
Loading, inclined reciprocating conveyors (shakers), **420**-19
Locks, chamber doors, food processing equipment, **425**-7
Locks or latches, storage bins, **425**-10
Lubrication
- bearings, power transmission parts, **200**-9
- fittings, food processing, **425**-8
- moving machinery, **200**-9

M

Machine initiation, roll forming and bending machines, **470**-2
Machine restarting, power failure, **200**-4
Machine vibration, controls, **200**-5
Machinery
- adjusting or repair, **200**-7
- drip cups and pans, **200**-9
- lubricating, **200**-9
- removing material, **200**-7
- veneers, **480**-41-43

Machines
- controls, operating, **200**-3
- emergency stop controls, **200**-4
- foot-operated controls, **200**-4
- overspeed, **200**-5
- power transmission parts, **200**-8
- restarting after power failure, **200**-4
- safeguarding, **200**-10-12

securing, **200**-1
slipping hazards, **200**-1
tools, hand feeding and retrieval, **200**-6
unintentional activation, **200**-4
vibration, **200**-5
work area for material handling, **200**-2
Maintenance
forging equipment, **430**-5
knives and cutting heads, **480**-29
machinery lubricating, **200**-9
power presses, **455**-23
Mandrels and arbors, **300**-1
Manlift, **425**-11; **500**-12
Manually-fed dough and cross-roll brakes, safeguarding methods, **425**-17
Manufacturer specifications, conveyor parts, **420**-10
Marking projections, towed conveyors, **420**-28
Matching machines, **480**-34
Material handling, food processing equipment
bag lifts (bag arm elevators), food processing equipment, **425**-11
chain tackle, food processing equipment, **425**-12
hand feeding and retrieval tools, **200**-6
removing from machine, **200**-7
work area, **200**-2
Mats, presence-sensing devices, **200**-18
Maximum exposure angle
abrasive wheels, **405**-7-8
definition, **500**-13
Meat-processing equipment, food processing equipment, **425**-23
Mechanical, belt shifter, **300**-6-8

Mechanical-feed moulders, **425**-27
Mechanical power presses
(See also Requirements for all machines)
all, **455**-1-24
barrier guards, adjustable, **455**-9
barrier guard, interlocked, **455**-9
design and construction, **455**-5
dies, **455**-19-20
guideposts, **455**-6
inspection and maintenance, **455**-23
operations, **455**-19-24
point-of-operation, **455**-7-10, 17-18
presence-sensing devices, **455**-11-12
PSDI (Presence Sensing Device Initiation), **455**-24
pull-back devices, **455**-13
restraint (holdout) devices, **455**-14
tool use, **455**-22
train press operators, **455**-21
two-hand control devices, **455**-15
two-hand trip devices, **455**-16
unitized tooling, **455**-6
Metal lathes, **450**-3-5
Midrails, guardrails, **200**-25
Mills, **460**-1-4, **R**-33
Minimum safety distance, presence-sensing devices, formula, **455**-11
Miter saws, **480**-17-18
Mixers, food processing
horizontal dough, **425**-24-25
vertical, **425**-26-27
Mobile conveyors, **420**-20-21
Molding machines, **480**-34
Mortising machines, **480**-30
Moulders, food processing
hand-fed, **425**-28
mechanical-feed, **425**-27
Mounted, above table, swing saws, **480**-25-26
Mounting
abrasive wheels, **405**-12
arbors and mandrels, **300**-1
between flanges, **405**-13
flanges, **405**-14
Moving
carts, protection, towed conveyors, **420**-27
machinery, lubricating, **200**-9
parts, projections, **200**-11; **300**-14
surfaces, with hazards, **200**-12

N

Nip or shear point
belt and pulley drives, **300**-6-8
belt conveyors, **420**-14
belt-driven live roller conveyors, **420**-23
belt sanders, **475**-3
hazards, **200**-10
mobile conveyors, **420**-20
roll-forming & bending machines, **470**-2
safeguarding, **200**-10

Index

O

Oil cans, **200**-9
Openings, guarding conveyors, **420**-12
Operating controls, **200**-3
Operation, unintentional, **200**-4
Operations
- calenders, **410**-4
- compactors, **415**-2
- controls, **200**-3
- mechanical power presses, **455**-21
- tools, equipment, overspeed, **200**-5
- unintentional, **200**-4

Ovens, **425**-28-29
Overhead belts, **300**-4
Overland belt conveyors, **420**-15
Overspeed tools and equipment, **200**-5

P

Pallet jacks, food processing, **425**-13
Panel raisers & other similar machines, saws and cutting heads, **480**-35
Pan-washing tanks, food processing, **425**-8
Peanut-cooling trucks, food processing, **425**-30
Pedestal grinders, abrasive wheels, **405**-9
Pedestrian overpasses, conveyors, **420**-11
Pipes, hot and exposed, food processing, **425**-8
Piston rods, extension, **300**-9
Planers, saws and cutting heads
- horizontal cutting head, **480**-35
- kickback protection, **480**-37
- safeguarding, **480**-36

Point of operation
- definition, **500**-15
- ironworkers, **445**-2
- mechanical power presses, **455**-7-10, 17-18
- press brakes, **465**-3-4
- safeguarding, **200**-10

Portable Power Tools
- *see* Chapter 296-807 WAC (*another book)*

Power-clamping devices, lathes, **450**-4
Power-driven, guillotine cutters, **480**-41-42
Power failure, machine restarting, **200**-4
Power transmission parts, **200**-8; **500**-15
Premixers, emulsifiers and similar machines, food processing equipment, **425**-21
Presence-sensing devices
- mats, **200**-18
- mechanical power presses, **455**-11

Press brakes
- *(See also* Requirements for all machines)
- all, **465**-1-8
- general requirements, **465**-3-4
- safe distance safeguarding, **465**-4-8

Presses, forging machines, **430**-5-8
Pressure pipes, forging machines, **430**-12
Pressure-sensitive mats, **200**-18
Pretzel, food processing equipment
- rolling machine, **425**-30
- stick extruding machine, **425**-30

Profile lathes and swing-head lathes, **450**-6
Projections
- moving parts, **300**-14
- moving surfaces, **200**-12

Proof boxes, food processing equipment, **425**-9
PSDI (Presence Sensing Device Initiation) mechanical power presses, **455**-24
Pull-back devices, mechanical power presses, **455**-13
Pullback or restraint devices, **200**-19
Pulleys
- all, **300**-15-16
- belt and pulley drives, **300**-6-8

Pulverizers, sugar & spice, food processing, **425**-32
Pusher bar conveyors, **420**-21

R

Rabbeting, saws and cutting heads, **480**-7
Rack-type bread coolers, **425**-7
Radial saws, **480**-19-23
Rated speed, **200**-5
Reciprocating or other moving parts, safeguarding methods, **200**-11
Repairing machinery, **200**-7
Replacement parts, conveyors, **420**-10
Requirements for all machines
- adjusting or repairing machinery, **200**-7
- all requirements, **200**-1-25; **300**-1-19
- devices, **200**-16

emergency stop controls, **200**-4
falling objects, **200**-11
flying objects, **200**-11
hazards, moving surfaces, **200**-12
inspect powered transmission parts, **200**-8
lubricating moving machinery, **200**-9
machine vibration, **200**-5
nip or shear point hazards, **200**-10
operating controls, **200**-3
overspeed conditions, **200**-5
power transmission parts, **200**-8
protect employees from slipping hazards, **200**-1
rotating or revolving parts, **200**-11
safeguarding from point of operation, **200**-10
secure machines, **200**-1
unintentional machine operations, **200**-4
work areas, avoid hazards, **200**-2
Restraint (holdout) devices, mechanical power presses, **455**-14
Restraint or pullback, devices, **200**-19
Restrictors, adjustable, ironworkers, **445**-2
Retrieval tools, **200**-6
Return-belt idlers, illustration, **420**-14
Return strands, chain conveyors, **420**-17
Reversible dough brakes, food processing, **425**-18
Revolving
collars, **300**-19
drums, barrels, and containers, **300**-16
parts, **200**-11
saws, double arbor, **480**-24
Riding, prohibiting, controls, **420**-8
Ring test, abrasive wheels, **405**-11; **R**-3
Ripping, ripsaws, **480**-12-14, 22-23
Ripping with a radial arm saw, illustration, **480**-23
Riving knife, **480**-12
Riving knife or spreaders, circular resaws, **480**-12
Rods, safeguarding, **300**-9
Roll forming and bending machines
(See also Requirements for all machines)
all, **470**-1-2
machine initiation, **470**-2
nip points, safeguarding, **470**-2
Roller conveyors, **420**-22-23
Rope or belt drives, **300**-2-5
Rotary machine, food processing, **425**-30
Rotating or revolving parts
collars, **300**-19
drums, barrels, and containers, **300**-16
safeguarding, **200**-11

S

Safe designs for fixed barricades, **200**-22-24
Safe distance, press brakes
inspections, **465**-7
safeguarding methods, **465**-4
safeguarding program, **465**-5
training, **465**-5-6
Safeguarding
falling objects, **200**-11
flying objects, **200**-11
moving surfaces, **200**-12
nip or shear points, **200**-10
point of operation, **200**-10
power transmission parts, **200**-8
reciprocating or other moving parts, **200**-11
rotating or revolving parts, **200**-11
Safeguarding, guards, **200**-13-15
Safeguarding methods, all, **200**-13-25
Safeguarding devices
all, **200**-16-21
barrier guards, **200**-21
light curtains, **200**-17
pressure-sensitive mats, **200**-18
pullback or restraint, **200**-19
two-hand, **200**-20
Safeguarding distances
definition, **500**-17
general requirement, **200**-22
guardrails, **200**-25
Safety aids, auxiliary, press brakes, **465**-3
Safety controls
calenders, **410**-2-3
machinery, **200**-7
mills, **460**-3-4
Safety guards, abrasive wheels, **405**-6-9
Sanding machines
(See also Requirements for all machines)
all, **475**-1-3
belt sanders, **475**-4
disk sanders, **475**-3

Index

drum sanders, **475**-2
feed roll guarding, **475**-3
Saws, circular
(See also Requirements for all machines)
all, **480**-8-15
gages, **480**-9
hand-fed, **480**-12
resaws, **480**-15
self-feed saws, **480**-14
Saws, general requirements for all, **480**-7-8
(See also Requirements for all machines)
Saws, specific types
(See also Requirements for all machines)
automatic, **480**-16
band, **480**-27
drag, **480**-28
inverted swing (jump), **480**-16-17
miter, **480**-17-18
radial, **480**-19-23
revolving double arbor, **480**-24
swing, **480**-24-26
Scale removal, forging machines, **430**-8
Scope, chapter application, **100**-1
Screw conveyors, **420**-24
Screw conveyors (augers), food processing, **425**-13
Secure machine, **200**-1
Securing
belt tighteners, **300**-8
board hammers, **430**-12
drip cups and pans, **200**-9
machines, **200**-1
shafting, **300**-18
Self-feed, circular saws, **480**-14
Sewing machine, **485**-1-2
(See also Requirements for all machines)
Shafting, **300**-17-18
Shakers, inclined reciprocating conveyors, **420**-19
Shapers, saws and cutting heads, **480**-38
Sharpening, saws and cutting heads, **480**-7
Shear points
safeguard, **200**-10
screw conveyors, **420**-24
Sheeters, box & roll-type dough, food processing, **425**-31
Shims and die keys, forging machines, **430**-10
Shut-off valve
forging machines, **430**-11
ovens, **425**-29
Shuttle conveyors, **420**-19
Skip hoists, conveyors, **420**-25
Slat and roller slat conveyors, **420**-26
Slipping hazards, **200**-1
Specific requirements, forging machines, table, **430**-3,
Spill guards, conveyors, **420**-10
Spokes, flywheels, **300**-12
Sprockets, safeguarding, **300**-10
Spreaders
circular resaws, **480**-15
glue, **440-**2
Stationary lubrication fittings, food processing equipment, **425**-8
Stationary safety ladder, **425**-10
Steam kettles, food processing equipment, **425**-22
Sticking machines, **480**-34
Stopping limits
calenders, **410**-4
mills, **460**-4
Storage bins, food processing equipment, **425**-10
Swing saws, **480**-24-26
Switches and valves, forging machines, **430**-9

T

Tables
fixed barriers, safeguarding by distance, **200**-2
forging machines, specific requirements, **430**-3
forging machines, strengths and dimensions, **430**-6
hammers and presses, strengths & dimensions, **430**-6
guard requirements, **405**-7-8
guard openings, safeguarding methods, **200**-14
safe distances from fixed barriers, **200**-23
Table saws
circular, guarding, **480**-10
ripsaw, nonkickback protection, **480**-12
Tail rods, safeguarding, **300**-9
Tenoning machines, saws & cutting heads, **480**-39
Toe boards, **200**-25

Tongs, forging machines, **430**-7
Tongue guard, abrasive wheels, **405**-9
Tool use, mechanical power presses, **455**-22
Tooling, unitized, mechanical power presses, **455**-6
Tools
  hand feeding and retrieval, **200**-6
  lubricating moving machinery, **200**-9
  overspeed, **200**-5
Top rails, guardrails, **200**-25
Tow pin, towed conveyors, **420**-26
Towed conveyors, **420**-26-28
Track-type flour scales, food processing, **425**-20
Train press operators, mechanical power presses, **455**-21
Travel, radial saws, **480**-21
Tread plates, **420**-22
Trip controls, calenders, **410**-2-3
Troughs, food processing, **425**-15
Trucks, peanut-cooling, food processing, **425**-30
Turning, automatic, lathes, safeguarding methods, **450**-7
Turning, lathes, covering, **450**-6
Two-hand control devices, mechanical power presses, **455**-15
Two-hand devices, **200**-20
Two-hand trip devices, mechanical power presses, **455**-16
Type 1 cutting off wheels, abrasive wheels, **405**-15
Type 6 wheels (terrazzo), **405**-16
Type 11 wheels (terrazzo), **405**-16
Type 27-a cutting-off wheels, **405**-15

U

Unintentional machine movement, **200**-4
Unitized tooling, mechanical power presses, **455**-6

V

Valves and switches, forging machines, **430**-9
Veneer machines, saws & cutting heads, **480**-40-42
Ventilation, doughnut machines, food processing, **425**-18
Vertical cutting heads, jointers, **480**-34
Vertical mixers, food processing, **425**-26
Vibrations, machine, **200**-5

W

Walking, prohibiting, roller conveyors, **420**-22
Waste (garbage) disposal, **435**-1-2
  (See also Requirements for all machines)
Wheels
  abrasive, mounting, **405**-12
  speed control, roller conveyors, **420**-22
Woodworking lathes, **450**-6-7
Work areas, avoid hazards, **200**-2
Work-holding devices (chucks), safeguarding, **450**-3
Work rest, off-hand grinding, **405**-10

Index

Statutory Authority

296-806-100 Scope.

[Statutory Authority: RCW 49.17.010, .040, .050, and .060. 04-14-028 (Order 01-12), § 296-806-100, filed 06/29/04, effective 01/01/05.]

296-806-200 Requirements for all machines.

[Statutory Authority: RCW 49.17.010, .040, .050, and .060. 04-14-028 (Order 01-12), § 296-806-200, filed 06/29/04, effective 01/01/05.]

296-806-20002 Secure machines designed to stay in one place.

[Statutory Authority: RCW 49.17.010, .040, .050, and .060. 04-14-028 (Order 01-12), § 296-806-20002, filed 06/29/04, effective 01/01/05.]

296-806-20004 Protect employees from slipping hazards around machinery.

[Statutory Authority: RCW 49.17.010, .040, .050, and .060. 04-14-028 (Order 01-12), § 296-806-20004, filed 06/29/04, effective 01/01/05.]

296-806-20006 Arrange work areas to avoid creating hazards.

[Statutory Authority: RCW 49.17.010, .040, .050, and .060. 04-14-028 (Order 01-12), § 296-806-20006, filed 06/29/04, effective 01/01/05.]

296-806-20008 Make sure operating controls meet these requirements.

[Statutory Authority: RCW 49.17.010, .040, .050, and .060. 04-14-028 (Order 01-12), § 296-806-20008, filed 06/29/04, effective 01/01/05.]

296-806-20010 Protect employees from unintentional machine operation.

[Statutory Authority: RCW 49.17.010, .040, .050, and .060. 04-14-028 (Order 01-12), § 296-806-20010, filed 06/29/04, effective 01/01/05.]

Machine Safety

Chapter 296-806 WAC

Statutory Authority

296-806-20012 Make sure emergency stop controls meet these requirements.

[Statutory Authority: RCW 49.17.010, .040, .050, and .060. 04-14-028 (Order 01-12), § 296-806-20012, filed 06/29/04, effective 01/01/05.]

296-806-20014 Control machine vibrations.

[Statutory Authority: RCW 49.17.010, .040, .050, and .060. 04-14-028 (Order 01-12), § 296-806-20014, filed 06/29/04, effective 01/01/05.]

296-806-20016 Prevent overspeed conditions.

[Statutory Authority: RCW 49.17.010, .040, .050, and .060. 04-14-028 (Order 01-12), § 296-806-20016, filed 06/29/04, effective 01/01/05.]

296-806-20018 Make sure hand feeding and retrieval tools meet these requirements.

[Statutory Authority: RCW 49.17.010, .040, .050, and .060. 04-14-028 (Order 01-12), § 296-806-20018, filed 06/29/04, effective 01/01/05.]

296-806-20020 Protect employees who are adjusting or repairing machinery.

[Statutory Authority: RCW 49.17.010, .040, .050, and .060. 04-14-028 (Order 01-12), § 296-806-20020, filed 06/29/04, effective 01/01/05.]

296-806-20022 Keep power transmission equipment in good working condition.

[Statutory Authority: RCW 49.17.010, .040, .050, and .060. 04-14-028 (Order 01-12), § 296-806-20022, filed 06/29/04, effective 01/01/05.]

296-806-20024 Inspect power transmission parts.

[Statutory Authority: RCW 49.17.010, .040, .050, and .060. 04-14-028 (Order 01-12), § 296-806-20024, filed 06/29/04, effective 01/01/05.]

Statutory Authority

296-806-20026 Protect employees lubricating moving machinery.

[Statutory Authority: RCW 49.17.010, .040, .050, and .060. 04-14-028 (Order 01-12), § 296-806-20026, filed 06/29/04, effective 01/01/05.]

296-806-20028 Safeguard employees from the point of operation.

[Statutory Authority: RCW 49.17.010, .040, .050, and .060. 04-14-028 (Order 01-12), § 296-806-20028, filed 06/29/04, effective 01/01/05.]

296-806-20030 Safeguard employees from nip or shear point hazards.

[Statutory Authority: RCW 49.17.010, .040, .050, and .060. 04-14-028 (Order 01-12), § 296-806-20030, filed 06/29/04, effective 01/01/05.]

296-806-20032 Safeguard employees from rotating or revolving parts.

[Statutory Authority: RCW 49.17.010, .040, .050, and .060. 04-14-028 (Order 01-12), § 296-806-20032, filed 06/29/04, effective 01/01/05.]

296-806-20034 Safeguard employees from reciprocating or other moving parts.

[Statutory Authority: RCW 49.17.010, .040, .050, and .060. 04-14-028 (Order 01-12), § 296-806-20034, filed 06/29/04, effective 01/01/05.]

296-806-20036 Safeguard employees from flying objects.

[Statutory Authority: RCW 49.17.010, .040, .050, and .060. 04-14-028 (Order 01-12), § 296-806-20036, filed 06/29/04, effective 01/01/05.]

296-806-20038 Safeguard employees from falling objects.

[Statutory Authority: RCW 49.17.010, .040, .050, and .060. 04-14-028 (Order 01-12), § 296-806-20038, filed 06/29/04, effective 01/01/05.]

Machine Safety

Chapter 296-806 WAC

Statutory Authority

296-806-20040 Safeguard employees from moving surfaces with hazards.

[Statutory Authority: RCW 49.17.010, .040, .050, and .060. 04-14-028 (Order 01-12), § 296-806-20040, filed 06/29/04, effective 01/01/05.]

296-806-20042 Make sure guards meet these requirements.

[Statutory Authority: RCW 49.17.010, .040, .050, and .060. 04-14-028 (Order 01-12), § 296-806-20042, filed 06/29/04, effective 01/01/05.]

296-806-20044 Make sure devices meet these requirements.

[Statutory Authority: RCW 49.17.010, .040, .050, and .060. 04-14-028 (Order 01-12), § 296-806-20044, filed 06/29/04, effective 01/01/05.]

296-806-20046 Make sure light curtains meet these requirements.

[Statutory Authority: RCW 49.17.010, .040, .050, and .060. 04-14-028 (Order 01-12), § 296-806-20046, filed 06/29/04, effective 01/01/05.]

296-806-20048 Make sure pressure-sensitive mats meet these requirements.

[Statutory Authority: RCW 49.17.010, .040, .050, and .060. 04-14-028 (Order 01-12), § 296-806-20048, filed 06/29/04, effective 01/01/05.]

296-806-20050 Make sure restraint of pullback devices meet these requiurements.

[Statutory Authority: RCW 49.17.010, .040, .050, and .060. 04-14-028 (Order 01-12), § 296-806-20050, filed 06/29/04, effective 01/01/05.]

296-806-20052 Make sure two-hand devices meet these requirements.

[Statutory Authority: RCW 49.17.010, .040, .050, and .060. 04-14-028 (Order 01-12), § 296-806-20052, filed 06/29/04, effective 01/01/05.]

Statutory Authority

296-806-20054 Make sure devices used with barrier guards meet these requirements.

[Statutory Authority: RCW 49.17.010, .040, .050, and .060. 04-14-028 (Order 01-12), § 296-806-20054, filed 06/29/04, effective 01/01/05.]

296-806-20056 Make sure safeguarding by distance meets these requirements.

[Statutory Authority: RCW 49.17.010, .040, .050, and .060. 04-14-028 (Order 01-12), § 296-806-20056, filed 06/29/04, effective 01/01/05.]

296-806-20058 Make sure guardrails used for safeguarding meet these requirements.

[Statutory Authority: RCW 49.17.010, .040, .050, and .060. 04-14-028 (Order 01-12), § 296-806-20058, filed 06/29/04, effective 01/01/05.]

296-806-300 Requirements for all machine.

[Statutory Authority: RCW 49.17.010, .040, .050, and .060. 04-14-028 (Order 01-12), § 296-806-300, filed 06/29/04, effective 01/01/05.]

296-806-30002 Fit arbors and mandrels to the machine.

[Statutory Authority: RCW 49.17.010, .040, .050, and .060. 04-14-028 (Order 01-12), § 296-806-30002, filed 06/29/04, effective 01/01/05.]

296-806-30004 Safeguard belt and rope drives.

[Statutory Authority: RCW 49.17.010, .040, .050, and .060. 04-14-028 (Order 01-12), § 296-806-30004, filed 06/29/04, effective 01/01/05.]

296-806-30006 Make sure belt or rope drives meet these requirements.

[Statutory Authority: RCW 49.17.010, .040, .050, and .060. 04-14-028 (Order 01-12), § 296-806-30006, filed 06/29/04, effective 01/01/05.]

Machine Safety

Chapter 296-806 WAC

Statutory Authority

296-806-30008 Protect employees while shifting belts on belt and pulley drives.

[Statutory Authority: RCW 49.17.010, .040, .050, and .060. 04-14-028 (Order 01-12), § 296-806-30008, filed 06/29/04, effective 01/01/05.]

296-806-30010 Make sure belt tighteners meet these requirements.

[Statutory Authority: RCW 49.17.010, .040, .050, and .060. 04-14-028 (Order 01-12), § 296-806-30010, filed 06/29/04, effective 01/01/05.]

296-806-30012 Safeguard cams, connecting rods, tail rods, and extension piston rods.

[Statutory Authority: RCW 49.17.010, .040, .050, and .060. 04-14-028 (Order 01-12), § 296-806-30012, filed 06/29/04, effective 01/01/05.]

296-806-30014 Safeguard chain sprocket drives.

[Statutory Authority: RCW 49.17.010, .040, .050, and .060. 04-14-028 (Order 01-12), § 296-806-30014, filed 06/29/04, effective 01/01/05.]

296-806-30016 Safeguard fan blades.

[Statutory Authority: RCW 49.17.010, .040, .050, and .060. 04-14-028 (Order 01-12), § 296-806-30016, filed 06/29/04, effective 01/01/05.]

296-806-30018 Safeguard flywheels.

[Statutory Authority: RCW 49.17.010, .040, .050, and .060. 04-14-028 (Order 01-12), § 296-806-30018, filed 06/29/04, effective 01/01/05.]

296-806-30020 Safeguard gears.

[Statutory Authority: RCW 49.17.010, .040, .050, and .060. 04-14-028 (Order 01-12), § 296-806-30020, filed 06/29/04, effective 01/01/05.]

Statutory Authority

296-806-30022 Safeguard projections on moving parts.

[Statutory Authority: RCW 49.17.010, .040, .050, and .060. 04-14-028 (Order 01-12), § 296-806-30022, filed 06/29/04, effective 01/01/05.]

296-806-30024 Safeguard pulleys.

[Statutory Authority: RCW 49.17.010, .040, .050, and .060. 04-14-028 (Order 01-12), § 296-806-30024, filed 06/29/04, effective 01/01/05.]

296-806-30026 Make sure pulleys meet these requirements.

[Statutory Authority: RCW 49.17.010, .040, .050, and .060. 04-14-028 (Order 01-12), § 296-806-30026, filed 06/29/04, effective 01/01/05.]

296-806-30028 Safeguard revolving drums, barrels, and containers.

[Statutory Authority: RCW 49.17.010, .040, .050, and .060. 04-14-028 (Order 01-12), § 296-806-30028, filed 06/29/04, effective 01/01/05.]

296-806-30030 Safeguard shafting.

[Statutory Authority: RCW 49.17.010, .040, .050, and .060. 04-14-028 (Order 01-12), § 296-806-30030, filed 06/29/04, effective 01/01/05.]

296-806-30032 Make sure shafting meets these requirements.

[Statutory Authority: RCW 49.17.010, .040, .050, and .060. 04-14-028 (Order 01-12), § 296-806-30032, filed 06/29/04, effective 01/01/05.]

296-806-30034 Safeguard unused keyways.

[Statutory Authority: RCW 49.17.010, .040, .050, and .060. 04-14-028 (Order 01-12), § 296-806-30034, filed 06/29/04, effective 01/01/05.]

Machine Safety

Chapter 296-806 WAC

Statutory Authority

296-806-30036 Make sure revolving collars meet these requirements.

[Statutory Authority: RCW 49.17.010, .040, .050, and .060. 04-14-028 (Order 01-12), § 296-806-30036, filed 06/29/04, effective 01/01/05.]

296-806-30038 Safeguard counterweights.

[Statutory Authority: RCW 49.17.010, .040, .050, and .060. 04-14-028 (Order 01-12), § 296-806-30038, filed 06/29/04, effective 01/01/05.]

296-806-400 Additional requirements for some machines and machine operations.

[Statutory Authority: RCW 49.17.010, .040, .050, and .060. 04-14-028 (Order 01-12), § 296-806-400, filed 06/29/04, effective 01/01/05.]

296-806-405 Abrasive wheels. Summary.

[Statutory Authority: RCW 49.17.010, .040, .050, and .060. 04-14-028 (Order 01-12), § 296-806-405, filed 06/29/04, effective 01/01/05.]

296-806-40502 Make sure abrasive wheels and machines are properly designed and constructed.

[Statutory Authority: RCW 49.17.010, .040, .050, and .060. 04-14-028 (Order 01-12), § 296-806-40502, filed 06/29/04, effective 01/01/05.]

296-806-40504 Make sure machines have safety guards.

[Statutory Authority: RCW 49.17.010, .040, .050, and .060. 04-14-028 (Order 01-12), § 296-806-40504, filed 06/29/04, effective 01/01/05.]

296-806-40506 Make sure safety guards meet specific requirements.

[Statutory Authority: RCW 49.17.010, .040, .050, and .060. 04-14-028 (Order 01-12), § 296-806-40506, filed 06/29/04, effective 01/01/05.]

296-806-40508 Provide a tongue guard on bench, pedestal, floorstand, and cylindrical grinders.

[Statutory Authority: RCW 49.17.010, .040, .050, and .060. 04-14-028 (Order 01-12), § 296-806-40508, filed 06/29/04, effective 01/01/05.]

296-806-40510 Use a work rest for off-hand grinding.

[Statutory Authority: RCW 49.17.010, .040, .050, and .060. 04-14-028 (Order 01-12), § 296-806-40510, filed 06/29/04, effective 01/01/05.]

296-806-40512 Make sure abrasive wheels are safe to use.

[Statutory Authority: RCW 49.17.010, .040, .050, and .060. 04-14-028 (Order 01-12), § 296-806-40512, filed 06/29/04, effective 01/01/05.]

296-806-40514 Mount wheels properly.

[Statutory Authority: RCW 49.17.010, .040, .050, and .060. 04-14-028 (Order 01-12), § 296-806-40514, filed 06/29/04, effective 01/01/05.]

296-806-40516 Use proper flanges.

[Statutory Authority: RCW 49.17.010, .040, .050, and .060. 04-14-028 (Order 01-12), § 296-806-40516, filed 06/29/04, effective 01/01/05.]

296-806-40518 Make sure flanges are in good condition.

[Statutory Authority: RCW 49.17.010, .040, .050, and .060. 04-14-028 (Order 01-12), § 296-806-40518, filed 06/29/04, effective 01/01/05.]

296-806-40520 Use specific flanges for Type 1 cutting-off wheels.

[Statutory Authority: RCW 49.17.010, .040, .050, and .060. 04-14-028 (Order 01-12), § 296-806-40520, filed 06/29/04, effective 01/01/05.]

Machine Safety

Chapter 296-806 WAC

Statutory Authority

296-806-40522 Use specific flanges for Type 27A cutting-off wheels.

[Statutory Authority: RCW 49.17.010, .040, .050, and .060. 04-14-028 (Order 01-12), § 296-806-40522, filed 06/29/04, effective 01/01/05.]

296-806-40524 Use blotters when required.

[Statutory Authority: RCW 49.17.010, .040, .050, and .060. 04-14-028 (Order 01-12), § 296-806-40524, filed 06/29/04, effective 01/01/05.]

296-806-40526 Meet specific blotter requirements when using modified Type 6 and 11 wheels (terrazzo).

[Statutory Authority: RCW 49.17.010, .040, .050, and .060. 04-14-028 (Order 01-12), § 296-806-40526, filed 06/29/04, effective 01/01/05.]

296-806-410 Calenders. Summary.

[Statutory Authority: RCW 49.17.010, .040, .050, and .060. 04-14-028 (Order 01-12), § 296-806-410, filed 06/29/04, effective 01/01/05.]

296-806-41002 Provide calender safety controls.

[Statutory Authority: RCW 49.17.010, .040, .050, and .060. 04-14-028 (Order 01-12), § 296-806-41002, filed 06/29/04, effective 01/01/05.]

296-806-41004 Follow these stopping limit requirements for calenders.

[Statutory Authority: RCW 49.17.010, .040, .050, and .060. 04-14-028 (Order 01-12), § 296-806-41004, filed 06/29/04, effective 01/01/05.]

296-806-415 Compactors. Summary.

[Statutory Authority: RCW 49.17.010, .040, .050, and .060. 04-14-028 (Order 01-12), § 296-806-415, filed 06/29/04, effective 01/01/05.]

296-806-41502 Safeguard hazardous moving parts of stationary compactors.

[Statutory Authority: RCW 49.17.010, .040, .050, and .060. 04-14-028 (Order 01-12), § 296-806-41502, filed 06/29/04, effective 01/01/05.]

296-806-41504 Follow these requirements for compactor controls.

[Statutory Authority: RCW 49.17.010, .040, .050, and .060. 04-14-028 (Order 01-12), § 296-806-41504, filed 06/29/04, effective 01/01/05.]

296-806-41506 Follow these requirements for compactor access doors and covers.

[Statutory Authority: RCW 49.17.010, .040, .050, and .060. 04-14-028 (Order 01-12), § 296-806-41506, filed 06/29/04, effective 01/01/05.]

296-806-41508 Follow these requirements for compactors that cycle automatically.

[Statutory Authority: RCW 49.17.010, .040, .050, and .060. 04-14-028 (Order 01-12), § 296-806-41508, filed 06/29/04, effective 01/01/05.]

296-806-420 Conveyors. Summary.

[Statutory Authority: RCW 49.17.010, .040, .050, and .060. 04-14-028 (Order 01-12), § 296-806-420, filed 06/29/04, effective 01/01/05.]

296-806-42002 Follow these requirements for conveyors.

[Statutory Authority: RCW 49.17.010, .040, .050, and .060. 04-14-028 (Order 01-12), § 296-806-42002, filed 06/29/04, effective 01/01/05.]

296-806-42004 Provide emergency stops on conveyors.

[Statutory Authority: RCW 49.17.010, .040, .050, and .060. 04-14-028 (Order 01-12), § 296-806-42004, filed 06/29/04, effective 01/01/05.]

Statutory Authority

296-806-42006 Label conveyor controls.

[Statutory Authority: RCW 49.17.010, .040, .050, and .060. 04-14-028 (Order 01-12), § 296-806-42006, filed 06/29/04, effective 01/01/05.]

296-806-42008 Prohibit riding on conveyors.

[Statutory Authority: RCW 49.17.010, .040, .050, and .060. 04-14-028 (Order 01-12), § 296-806-42008, filed 06/29/04, effective 01/01/05.]

296-806-42010 Provide safe access to conveyors.

[Statutory Authority: RCW 49.17.010, .040, .050, and .060. 04-14-028 (Order 01-12), § 296-806-42010, filed 06/29/04, effective 01/01/05.]

296-806-42012 Provide backstop or antirunway devices on incline, decline, or vertical conveyors.

[Statutory Authority: RCW 49.17.010, .040, .050, and .060. 04-14-028 (Order 01-12), § 296-806-42012, filed 06/29/04, effective 01/01/05.]

296-806-42014 Make only safe alterations to conveyors.

[Statutory Authority: RCW 49.17.010, .040, .050, and .060. 04-14-028 (Order 01-12), § 296-806-42014, filed 06/29/04, effective 01/01/05.]

296-806-42016 Inspect and replace worn conveyor parts.

[Statutory Authority: RCW 49.17.010, .040, .050, and .060. 04-14-028 (Order 01-12), § 296-806-42016, filed 06/29/04, effective 01/01/05.]

296-806-42018 Follow these requirements for replacing conveyor parts.

[Statutory Authority: RCW 49.17.010, .040, .050, and .060. 04-14-028 (Order 01-12), § 296-806-42018, filed 06/29/04, effective 01/01/05.]

Statutory Authority

296-806-42020 Follow these requirements for spill guards.

[Statutory Authority: RCW 49.17.010, .040, .050, and .060. 04-14-028 (Order 01-12), § 296-806-42020, filed 06/29/04, effective 01/01/05.]

296-806-42022 Provide pedestrian overpasses for conveyors.

[Statutory Authority: RCW 49.17.010, .040, .050, and .060. 04-14-028 (Order 01-12), § 296-806-42022, filed 06/29/04, effective 01/01/05.]

296-806-42024 Guard openings to hoppers and chutes.

[Statutory Authority: RCW 49.17.010, .040, .050, and .060. 04-14-028 (Order 01-12), § 296-806-42024, filed 06/29/04, effective 01/01/05.]

296-806-42026 Install guideposts.

[Statutory Authority: RCW 49.17.010, .040, .050, and .060. 04-14-028 (Order 01-12), § 296-806-42026, filed 06/29/04, effective 01/01/05.]

296-806-42028 Guard nip points on belt conveyors.

[Statutory Authority: RCW 49.17.010, .040, .050, and .060. 04-14-028 (Order 01-12), § 296-806-42028, filed 06/29/04, effective 01/01/05.]

296-806-42030 Install emergency stop controllers on overland belt conveyors.

[Statutory Authority: RCW 49.17.010, .040, .050, and .060. 04-14-028 (Order 01-12), § 296-806-42030, filed 06/29/04, effective 01/01/05.]

296-806-42032 Install belt conveyor overpasses.

[Statutory Authority: RCW 49.17.010, .040, .050, and .060. 04-14-028 (Order 01-12), § 296-806-42032, filed 06/29/04, effective 01/01/05.]

Machine Safety

Chapter 296-806 WAC

Statutory Authority

296-806-42034 Safeguard chain conveyors.

[Statutory Authority: RCW 49.17.010, .040, .050, and .060. 04-14-028 (Order 01-12), § 296-806-42034, filed 06/29/04, effective 01/01/05.]

296-806-42036 Guard return strands on chain conveyors.

[Statutory Authority: RCW 49.17.010, .040, .050, and .060. 04-14-028 (Order 01-12), § 296-806-42036, filed 06/29/04, effective 01/01/05.]

296-806-42038 Guard chain conveyors that are used as a transfer mechanism.

[Statutory Authority: RCW 49.17.010, .040, .050, and .060. 04-14-028 (Order 01-12), § 296-806-42038, filed 06/29/04, effective 01/01/05.]

296-806-42040 Prevent material from falling off of elevator conveyors.

[Statutory Authority: RCW 49.17.010, .040, .050, and .060. 04-14-028 (Order 01-12), § 296-806-42040, filed 06/29/04, effective 01/01/05.]

296-806-42042 Provide protection where employees must load shakers.

[Statutory Authority: RCW 49.17.010, .040, .050, and .060. 04-14-028 (Order 01-12), § 296-806-42042, filed 06/29/04, effective 01/01/05.]

296-806-42044 Provide grating over silo and bunker openings for shuttle conveyors.

[Statutory Authority: RCW 49.17.010, .040, .050, and .060. 04-14-028 (Order 01-12), § 296-806-42044, filed 06/29/04, effective 01/01/05.]

296-806-42046 Guard wheels and rails on mobile conveyors.

[Statutory Authority: RCW 49.17.010, .040, .050, and .060. 04-14-028 (Order 01-12), § 296-806-42046, filed 06/29/04, effective 01/01/05.]

296-806-42048 Prevent hazardous motion on mobile conveyors.

[Statutory Authority: RCW 49.17.010, .040, .050, and .060. 04-14-028 (Order 01-12), § 296-806-42048, filed 06/29/04, effective 01/01/05.]

296-806-42050 Provide a detector for mobile conveyors.

[Statutory Authority: RCW 49.17.010, .040, .050, and .060. 04-14-028 (Order 01-12), § 296-806-42050, filed 06/29/04, effective 01/01/05.]

296-806-42052 Provide safe access on mobile conveyors.

[Statutory Authority: RCW 49.17.010, .040, .050, and .060. 04-14-028 (Order 01-12), § 296-806-42052, filed 06/29/04, effective 01/01/05.]

296-806-42054 Guard pusher-bar conveyors.

[Statutory Authority: RCW 49.17.010, .040, .050, and .060. 04-14-028 (Order 01-12), § 296-806-42054, filed 06/29/04, effective 01/01/05.]

296-806-42056 Prohibit walking on roller-type conveyors.

[Statutory Authority: RCW 49.17.010, .040, .050, and .060. 04-14-028 (Order 01-12), § 296-806-42056, filed 06/29/04, effective 01/01/05.]

296-806-42058 Use speed controls for roller and wheel conveyors.

[Statutory Authority: RCW 49.17.010, .040, .050, and .060. 04-14-028 (Order 01-12), § 296-806-42058, filed 06/29/04, effective 01/01/05.]

296-806-42060 Safeguard belt-driven live roller conveyors.

[Statutory Authority: RCW 49.17.010, .040, .050, and .060. 04-14-028 (Order 01-12), § 296-806-42060, filed 06/29/04, effective 01/01/05.]

296-806-42062 Guard screw conveyors.

[Statutory Authority: RCW 49.17.010, .040, .050, and .060. 04-14-028 (Order 01-12), § 296-806-42062, filed 06/29/04, effective 01/01/05.]

Statutory Authority

296-806-42064 Provide slack-cable switches on hoists.

[Statutory Authority: RCW 49.17.010, .040, .050, and .060. 04-14-028 (Order 01-12), § 296-806-42064, filed 06/29/04, effective 01/01/05.]

296-806-42066 Block the skip bucket and counterweight guides.

[Statutory Authority: RCW 49.17.010, .040, .050, and .060. 04-14-028 (Order 01-12), § 296-806-42066, filed 06/29/04, effective 01/01/05.]

296-806-42068 Protect against wire rope coming off sheaves.

[Statutory Authority: RCW 49.17.010, .040, .050, and .060. 04-14-028 (Order 01-12), § 296-806-42068, filed 06/29/04, effective 01/01/05.]

296-806-42070 Safeguard slat and roller-slat conveyors.

[Statutory Authority: RCW 49.17.010, .040, .050, and .060. 04-14-028 (Order 01-12), § 296-806-42070, filed 06/29/04, effective 01/01/05.]

296-806-42072 Provide a safe method for disengaging the tow pin.

[Statutory Authority: RCW 49.17.010, .040, .050, and .060. 04-14-028 (Order 01-12), § 296-806-42072, filed 06/29/04, effective 01/01/05.]

296-806-42074 Protect employees from moving carts on towed conveyors.

[Statutory Authority: RCW 49.17.010, .040, .050, and .060. 04-14-028 (Order 01-12), § 296-806-42074, filed 06/29/04, effective 01/01/05.]

296-806-42076 Provide clearances and warnings for carts on towed conveyors.

[Statutory Authority: RCW 49.17.010, .040, .050, and .060. 04-14-028 (Order 01-12), § 296-806-42076, filed 06/29/04, effective 01/01/05.]

296-806-42078 Mark projections above the floor.

[Statutory Authority: RCW 49.17.010, .040, .050, and .060. 04-14-028 (Order 01-12), § 296-806-42078, filed 06/29/04, effective 01/01/05.]

Statutory Authority

296-806-425 Food processing equipment. Summary.

[Statutory Authority: RCW 49.17.010, .040, .050, and .060. 04-14-028 (Order 01-12), § 296-806-425, filed 06/29/04, effective 01/01/05.]

296-806-42502 Provide locks on chamber doors of large air conditioning units.

[Statutory Authority: RCW 49.17.010, .040, .050, and .060. 04-14-028 (Order 01-12), § 296-806-42502, filed 06/29/04, effective 01/01/05.]

296-806-42504 Use proper door locks on rack-type bread coolers.

[Statutory Authority: RCW 49.17.010, .040, .050, and .060. 04-14-028 (Order 01-12), § 296-806-42504, filed 06/29/04, effective 01/01/05.]

296-806-42506 Provide see-through panels on fermentation room doors.

[Statutory Authority: RCW 49.17.010, .040, .050, and .060. 04-14-028 (Order 01-12), § 296-806-42506, filed 06/29/04, effective 01/01/05.]

296-806-42508 Cover exposed hot pipes.

[Statutory Authority: RCW 49.17.010, .040, .050, and .060. 04-14-028 (Order 01-12), § 296-806-42508, filed 06/29/04, effective 01/01/05.]

296-806-42510 Provide extension piping on stationary lubrication fittings.

[Statutory Authority: RCW 49.17.010, .040, .050, and .060. 04-14-028 (Order 01-12), § 296-806-42510, filed 06/29/04, effective 01/01/05.]

296-806-42512 Provide hoods for pan-washing tanks.

[Statutory Authority: RCW 49.17.010, .040, .050, and .060. 04-14-028 (Order 01-12), § 296-806-42512, filed 06/29/04, effective 01/01/05.]

Statutory Authority

296-806-42514 Safeguard proof boxes.

[Statutory Authority: RCW 49.17.010, .040, .050, and .060. 04-14-028 (Order 01-12), § 296-806-42514, filed 06/29/04, effective 01/01/05.]

296-806-42516 Safeguard storage bins.

[Statutory Authority: RCW 49.17.010, .040, .050, and .060. 04-14-028 (Order 01-12), § 296-806-42516, filed 06/29/04, effective 01/01/05.]

296-806-42518 Follow these design requirements for bag lifts (bag arm elevators) and chutes.

[Statutory Authority: RCW 49.17.010, .040, .050, and .060. 04-14-028 (Order 01-12), § 296-806-42518, filed 06/29/04, effective 01/01/05.]

296-806-42520 Follow these requirements for chain tackle.

[Statutory Authority: RCW 49.17.010, .040, .050, and .060. 04-14-028 (Order 01-12), § 296-806-42520, filed 06/29/04, effective 01/01/05.]

296-806-42522 Safeguard conveyors.

[Statutory Authority: RCW 49.17.010, .040, .050, and .060. 04-14-028 (Order 01-12), § 296-806-42522, filed 06/29/04, effective 01/01/05.]

296-806-42524 Use properly designed covers for screw conveyors (augers).

[Statutory Authority: RCW 49.17.010, .040, .050, and .060. 04-14-028 (Order 01-12), § 296-806-42524, filed 06/29/04, effective 01/01/05.]

296-806-42526 Safeguard pallet jacks and hand trucks.

[Statutory Authority: RCW 49.17.010, .040, .050, and .060. 04-14-028 (Order 01-12), § 296-806-42526, filed 06/29/04, effective 01/01/05.]

296-806-42528 Safeguard bakery slicers.

[Statutory Authority: RCW 49.17.010, .040, .050, and .060. 04-14-028 (Order 01-12), § 296-806-42528, filed 06/29/04, effective 01/01/05.]

296-806-42530 Safeguard bakery wrapping machines.

[Statutory Authority: RCW 49.17.010, .040, .050, and .060. 04-14-028 (Order 01-12), § 296-806-42530, filed 06/29/04, effective 01/01/05.]

296-806-42532 Provide troughs with antifriction-bearing casters.

[Statutory Authority: RCW 49.17.010, .040, .050, and .060. 04-14-028 (Order 01-12), § 296-806-42532, filed 06/29/04, effective 01/01/05.]

296-806-42534 Follow these requirements for trough hoists and similar equipment.

[Statutory Authority: RCW 49.17.010, .040, .050, and .060. 04-14-028 (Order 01-12), § 296-806-42534, filed 06/29/04, effective 01/01/05.]

296-806-42536 Follow these requirements for dividers.

[Statutory Authority: RCW 49.17.010, .040, .050, and .060. 04-14-028 (Order 01-12), § 296-806-42536, filed 06/29/04, effective 01/01/05.]

296-806-42538 Safeguard manually-fed dough and cross-roll brakes.

[Statutory Authority: RCW 49.17.010, .040, .050, and .060. 04-14-028 (Order 01-12), § 296-806-42538, filed 06/29/04, effective 01/01/05.]

296-806-42540 Provide a guard or tripping device on reversible dough brakes.

[Statutory Authority: RCW 49.17.010, .040, .050, and .060. 04-14-028 (Order 01-12), § 296-806-42540, filed 06/29/04, effective 01/01/05.]

Statutory Authority

296-806-42542 Follow these requirement for doughnut machines.

[Statutory Authority: RCW 49.17.010, .040, .050, and .060. 04-14-028 (Order 01-12), § 296-806-42542, filed 06/29/04, effective 01/01/05.]

296-806-42544 Follow these requirements for dumpbins and blenders.

[Statutory Authority: RCW 49.17.010, .040, .050, and .060. 04-14-028 (Order 01-12), § 296-806-42544, filed 06/29/04, effective 01/01/05.]

296-806-42546 Follow these requirements for flour-handling machines.

[Statutory Authority: RCW 49.17.010, .040, .050, and .060. 04-14-028 (Order 01-12), § 296-806-42546, filed 06/29/04, effective 01/01/05.]

296-806-42548 Follow these requirements for traveling or track-type flour scales.

[Statutory Authority: RCW 49.17.010, .040, .050, and .060. 04-14-028 (Order 01-12), § 296-806-42548, filed 06/29/04, effective 01/01/05.]

296-806-42550 Follow these requirements for food grinders and cutters.

[Statutory Authority: RCW 49.17.010, .040, .050, and .060. 04-14-028 (Order 01-12), § 296-806-42550, filed 06/29/04, effective 01/01/05.]

296-806-42552 Provide covers with interlocks on ingredient premixers, emulsifiers, and similar machines.

[Statutory Authority: RCW 49.17.010, .040, .050, and .060. 04-14-028 (Order 01-12), § 296-806-42552, filed 06/29/04, effective 01/01/05.]

296-806-42554 Follow these requirements for open fat kettles.

[Statutory Authority: RCW 49.17.010, .040, .050, and .060. 04-14-028 (Order 01-12), § 296-806-42554, filed 06/29/04, effective 01/01/05.]

296-806-42556 Follow these requirements for steam kettles.

[Statutory Authority: RCW 49.17.010, .040, .050, and .060. 04-14-028 (Order 01-12), § 296-806-42556, filed 06/29/04, effective 01/01/05.]

296-806-42558 Follow these requirements for chocolate melting, refining, and mixing kettles.

[Statutory Authority: RCW 49.17.010, .040, .050, and .060. 04-14-028 (Order 01-12), § 296-806-42558, filed 06/29/04, effective 01/01/05.]

296-806-42560 Safeguard meat-processing equipment (circular meat-cutting saws).

[Statutory Authority: RCW 49.17.010, .040, .050, and .060. 04-14-028 (Order 01-12), § 296-806-42560, filed 06/29/04, effective 01/01/05.]

296-806-42562 Follow these requirements for horizontal dough mixers.

[Statutory Authority: RCW 49.17.010, .040, .050, and .060. 04-14-028 (Order 01-12), § 296-806-42562, filed 06/29/04, effective 01/01/05.]

296-806-42564 Follow these requirements for vertical mixers.

[Statutory Authority: RCW 49.17.010, .040, .050, and .060. 04-14-028 (Order 01-12), § 296-806-42564, filed 06/29/04, effective 01/01/05.]

296-806-42566 Follow these requirements for mechanical-feed moulders.

[Statutory Authority: RCW 49.17.010, .040, .050, and .060. 04-14-028 (Order 01-12), § 296-806-42566, filed 06/29/04, effective 01/01/05.]

296-806-42568 Follow these requirements for hand-fed moulders.

[Statutory Authority: RCW 49.17.010, .040, .050, and .060. 04-14-028 (Order 01-12), § 296-806-42568, filed 06/29/04, effective 01/01/05.]

Machine Safety

Chapter 296-806 WAC

Statutory Authority

296-806-42570 Design, install, and construct your ovens according to these requirements.

[Statutory Authority: RCW 49.17.010, .040, .050, and .060. 04-14-028 (Order 01-12), § 296-806-42570, filed 06/29/04, effective 01/01/05.]

296-806-42572 Properly locate emergency "stop" buttons and main shut off valves for ovens.

[Statutory Authority: RCW 49.17.010, .040, .050, and .060. 04-14-028 (Order 01-12), § 296-806-42572, filed 06/29/04, effective 01/01/05.]

296-806-42574 Inspect and test safety devices on ovens.

[Statutory Authority: RCW 49.17.010, .040, .050, and .060. 04-14-028 (Order 01-12), § 296-806-42574, filed 06/29/04, effective 01/01/05.]

296-806-42576 Follow these requirements for peanut-cooling trucks.

[Statutory Authority: RCW 49.17.010, .040, .050, and .060. 04-14-028 (Order 01-12), § 296-806-42576, filed 06/29/04, effective 01/01/05.]

296-806-42578 Follow these requirements for pretzel-rolling, pretzel stick extruding, rotary, and die machines.

[Statutory Authority: RCW 49.17.010, .040, .050, and .060. 04-14-028 (Order 01-12), § 296-806-42578, filed 06/29/04, effective 01/01/05.]

296-806-42580 Safeguard box and roll-type dough sheeters.

[Statutory Authority: RCW 49.17.010, .040, .050, and .060. 04-14-028 (Order 01-12), § 296-806-42580, filed 06/29/04, effective 01/01/05.]

296-806-42582 Provide proper enclosures for sifters.

[Statutory Authority: RCW 49.17.010, .040, .050, and .060. 04-14-028 (Order 01-12), § 296-806-42582, filed 06/29/04, effective 01/01/05.]

296-806-42584 Follow these requirements for sugar and spice pulverizers.

[Statutory Authority: RCW 49.17.010, .040, .050, and .060. 04-14-028 (Order 01-12), § 296-806-42584, filed 06/29/04, effective 01/01/05.]

296-806-430 Forging machines. Summary.

[Statutory Authority: RCW 49.17.010, .040, .050, and .060. 04-14-028 (Order 01-12), § 296-806-430, filed 06/29/04, effective 01/01/05.]

296-806-43002 Follow these safety requirements when using lead and lead casts.

[Statutory Authority: RCW 49.17.010, .040, .050, and .060. 04-14-028 (Order 01-12), § 296-806-43002, filed 06/29/04, effective 01/01/05.]

296-806-43004 Properly inspect and maintain forging equipment.

[Statutory Authority: RCW 49.17.010, .040, .050, and .060. 04-14-028 (Order 01-12), § 296-806-43004, filed 06/29/04, effective 01/01/05.]

296-806-43006 Use safety blocks on hammers and presses.

[Statutory Authority: RCW 49.17.010, .040, .050, and .060. 04-14-028 (Order 01-12), § 296-806-43006, filed 06/29/04, effective 01/01/05.]

296-806-43008 Make sure tongs meet these requirements.

[Statutory Authority: RCW 49.17.010, .040, .050, and .060. 04-14-028 (Order 01-12), § 296-806-43008, filed 06/29/04, effective 01/01/05.]

Machine Safety

Chapter 296-806 WAC

Statutory Authority

296-806-43010 Protect employees when removing scale.

[Statutory Authority: RCW 49.17.010, .040, .050, and .060. 04-14-028 (Order 01-12), § 296-806-43010, filed 06/29/04, effective 01/01/05.]

296-806-43012 Provide adequate foundations for hammers and presses.

[Statutory Authority: RCW 49.17.010, .040, .050, and .060. 04-14-028 (Order 01-12), § 296-806-43012, filed 06/29/04, effective 01/01/05.]

296-806-43014 Follow these requirements for manually operated valves and switches.

[Statutory Authority: RCW 49.17.010, .040, .050, and .060. 04-14-028 (Order 01-12), § 296-806-43014, filed 06/29/04, effective 01/01/05.]

296-806-43016 Use die keys and shims made of proper-grade material.

[Statutory Authority: RCW 49.17.010, .040, .050, and .060. 04-14-028 (Order 01-12), § 296-806-43016, filed 06/29/04, effective 01/01/05.]

296-806-43018 Provide a safety cylinder head.

[Statutory Authority: RCW 49.17.010, .040, .050, and .060. 04-14-028 (Order 01-12), § 296-806-43018, filed 06/29/04, effective 01/01/05.]

296-806-43020 Provide a shutoff valve.

[Statutory Authority: RCW 49.17.010, .040, .050, and .060. 04-14-028 (Order 01-12), § 296-806-43020, filed 06/29/04, effective 01/01/05.]

296-806-43022 Provide a means for cylinder draining.

[Statutory Authority: RCW 49.17.010, .040, .050, and .060. 04-14-028 (Order 01-12), § 296-806-43022, filed 06/29/04, effective 01/01/05.]

Statutory Authority

296-806-43024 Follow these requirements for pressure pipes.

[Statutory Authority: RCW 49.17.010, .040, .050, and .060. 04-14-028 (Order 01-12), § 296-806-43024, filed 06/29/04, effective 01/01/05.]

296-806-43026 Follow these requirements when using board hammers.

[Statutory Authority: RCW 49.17.010, .040, .050, and .060. 04-14-028 (Order 01-12), § 296-806-43026, filed 06/29/04, effective 01/01/05.]

296-806-43028 Protect against sparks from saws.

[Statutory Authority: RCW 49.17.010, .040, .050, and .060. 04-14-028 (Order 01-12), § 296-806-43028, filed 06/29/04, effective 01/01/05.]

296-806-435 Garbage (waste) disposals. Summary.

[Statutory Authority: RCW 49.17.010, .040, .050, and .060. 04-14-028 (Order 01-12), § 296-806-435, filed 06/29/04, effective 01/01/05.]

296-806-43502 Safeguard garbage (waste) disposal equipment.

[Statutory Authority: RCW 49.17.010, .040, .050, and .060. 04-14-028 (Order 01-12), § 296-806-43502, filed 06/29/04, effective 01/01/05.]

296-806-440 Glue spreaders. Summary.

[Statutory Authority: RCW 49.17.010, .040, .050, and .060. 04-14-028 (Order 01-12), § 296-806-440, filed 06/29/04, effective 01/01/05.]

296-806-44002 Provide guards and automatic shutoffs on glue spreaders.

[Statutory Authority: RCW 49.17.010, .040, .050, and .060. 04-14-028 (Order 01-12), § 296-806-44002, filed 06/29/04, effective 01/01/05.]

Statutory Authority

296-806-445 Ironworkers. Summary.

[Statutory Authority: RCW 49.17.010, .040, .050, and .060. 04-14-028 (Order 01-12), § 296-806-445, filed 06/29/04, effective 01/01/05.]

296-806-44502 Safeguard ironworkers point of operation.

[Statutory Authority: RCW 49.17.010, .040, .050, and .060. 04-14-028 (Order 01-12), § 296-806-44502, filed 06/29/04, effective 01/01/05.]

296-806-44504 Follow these requirements for adjustable restrictors when safeguarding ironworkers.

[Statutory Authority: RCW 49.17.010, .040, .050, and .060. 04-14-028 (Order 01-12), § 296-806-44504, filed 06/29/04, effective 01/01/05.]

296-806-450 Lathes. Summary.

[Statutory Authority: RCW 49.17.010, .040, .050, and .060. 04-14-028 (Order 01-12), § 296-806-450, filed 06/29/04, effective 01/01/05.]

296-806-45002 Provide shields or guards on metal lathes for chip or coolant hazards.

[Statutory Authority: RCW 49.17.010, .040, .050, and .060. 04-14-028 (Order 01-12), § 296-806-45002, filed 06/29/04, effective 01/01/05.]

296-806-45004 Safeguard work-holding devices (chucks).

[Statutory Authority: RCW 49.17.010, .040, .050, and .060. 04-14-028 (Order 01-12), § 296-806-45004, filed 06/29/04, effective 01/01/05.]

296-806-45006 Follow these requirements for chip control and handling.

[Statutory Authority: RCW 49.17.010, .040, .050, and .060. 04-14-028 (Order 01-12), § 296-806-45006, filed 06/29/04, effective 01/01/05.]

Statutory Authority

296-806-45008 Safeguard power-clamping devices.

[Statutory Authority: RCW 49.17.010, .040, .050, and .060. 04-14-028 (Order 01-12), § 296-806-45008, filed 06/29/04, effective 01/01/05.]

296-806-45010 Restrain extended workpieces on horizontal lathes.

[Statutory Authority: RCW 49.17.010, .040, .050, and .060. 04-14-028 (Order 01-12), § 296-806-45010, filed 06/29/04, effective 01/01/05.]

296-806-45012 Guard cutting heads on profile lathes and swing-head lathes.

[Statutory Authority: RCW 49.17.010, .040, .050, and .060. 04-14-028 (Order 01-12), § 296-806-45012, filed 06/29/04, effective 01/01/05.]

296-806-45014 Guard cutting heads on turning lathes.

[Statutory Authority: RCW 49.17.010, .040, .050, and .060. 04-14-028 (Order 01-12), § 296-806-45014, filed 06/29/04, effective 01/01/05.]

296-806-45016 Guard automatic turning lathes.

[Statutory Authority: RCW 49.17.010, .040, .050, and .060. 04-14-028 (Order 01-12), § 296-806-45016, filed 06/29/04, effective 01/01/05.]

296-806-45018 Guard wood lathes used for turning long pieces of stock.

[Statutory Authority: RCW 49.17.010, .040, .050, and .060. 04-14-028 (Order 01-12), § 296-806-45018, filed 06/29/04, effective 01/01/05.]

296-806-455 Mechanical power presses. Summary.

[Statutory Authority: RCW 49.17.010, .040, .050, and .060. 04-14-028 (Order 01-12), § 296-806-455, filed 06/29/04, effective 01/01/05.]

Machine Safety

Chapter 296-806 WAC

Statutory Authority

296-806-45502 Make sure mechanical power presses are properly designed and constructed.

[Statutory Authority: RCW 49.17.010, .040, .050, and .060. 04-14-028 (Order 01-12), § 296-806-45502, filed 06/29/04, effective 01/01/05.]

296-806-45504 Safeguard presses that use unitized tooling.

[Statutory Authority: RCW 49.17.010, .040, .050, and .060. 04-14-028 (Order 01-12), § 296-806-45504, filed 06/29/04, effective 01/01/05.]

296-806-45506 Protect operators from guidepost hazards.

[Statutory Authority: RCW 49.17.010, .040, .050, and .060. 04-14-028 (Order 01-12), § 296-806-45506, filed 06/29/04, effective 01/01/05.]

296-806-45508 Safeguard the point of operation.

[Statutory Authority: RCW 49.17.010, .040, .050, and .060. 04-14-028 (Order 01-12), § 296-806-45508, filed 06/29/04, effective 01/01/05.]

296-806-45510 Make sure point-of-operation guards are properly designed and constructed.

[Statutory Authority: RCW 49.17.010, .040, .050, and .060. 04-14-028 (Order 01-12), § 296-806-45510, filed 06/29/04, effective 01/01/05.]

296-806-45512 Make sure barrier guards meet these requirements.

[Statutory Authority: RCW 49.17.010, .040, .050, and .060. 04-14-028 (Order 01-12), § 296-806-45512, filed 06/29/04, effective 01/01/05.]

296-806-45514 Make sure point-of-operation devices are effective.

[Statutory Authority: RCW 49.17.010, .040, .050, and .060. 04-14-028 (Order 01-12), § 296-806-45514, filed 06/29/04, effective 01/01/05.]

296-806-45516 Make sure pressure-sensing devices used to safeguard the point of operation meet these requirements.

[Statutory Authority: RCW 49.17.010, .040, .050, and .060. 04-14-028 (Order 01-12), § 296-806-45516, filed 06/29/04, effective 01/01/05.]

296-806-45518 Make sure pull-back devices used to safeguard the point of operation meet these requirements.

[Statutory Authority: RCW 49.17.010, .040, .050, and .060. 04-14-028 (Order 01-12), § 296-806-45518, filed 06/29/04, effective 01/01/05.]

296-806-45520 Make sure restraint (holdout) devices used to safeguard the point of operation meet these requirements.

[Statutory Authority: RCW 49.17.010, .040, .050, and .060. 04-14-028 (Order 01-12), § 296-806-45520, filed 06/29/04, effective 01/01/05.]

296-806-45522 Make sure two-hand control devices used to safeguard the point of operation meet these requirements.

[Statutory Authority: RCW 49.17.010, .040, .050, and .060. 04-14-028 (Order 01-12), § 296-806-45522, filed 06/29/04, effective 01/01/05.]

296-806-45524 Make sure two-hand trip devices used to safeguard the poinnt of operation meet these requirements.

[Statutory Authority: RCW 49.17.010, .040, .050, and .060. 04-14-028 (Order 01-12), § 296-806-45524, filed 06/29/04, effective 01/01/05.]

296-806-45526 Provide additional safeguards when the operator puts one or both hands into the point of operation.

[Statutory Authority: RCW 49.17.010, .040, .050, and .060. 04-14-028 (Order 01-12), § 296-806-45526, filed 06/29/04, effective 01/01/05.]

Machine Safety

Chapter 296-806 WAC

Statutory Authority

296-806-45528 Establish die setting procedures.

[Statutory Authority: RCW 49.17.010, .040, .050, and .060. 04-14-028 (Order 01-12), § 296-806-45528, filed 06/29/04, effective 01/01/05.]

296-806-45530 Handle dies safely.

[Statutory Authority: RCW 49.17.010, .040, .050, and .060. 04-14-028 (Order 01-12), § 296-806-45530, filed 06/29/04, effective 01/01/05.]

296-806-45532 Protect die setters during setup and tryout.

[Statutory Authority: RCW 49.17.010, .040, .050, and .060. 04-14-028 (Order 01-12), § 296-806-45532, filed 06/29/04, effective 01/01/05.]

296-806-45534 Train press operators.

[Statutory Authority: RCW 49.17.010, .040, .050, and .060. 04-14-028 (Order 01-12), § 296-806-45534, filed 06/29/04, effective 01/01/05.]

296-806-45536 Operate mechanical power presses safely.

[Statutory Authority: RCW 49.17.010, .040, .050, and .060. 04-14-028 (Order 01-12), § 296-806-45536, filed 06/29/04, effective 01/01/05.]

296-806-45538 Provide tools and other means to protect press operators.

[Statutory Authority: RCW 49.17.010, .040, .050, and .060. 04-14-028 (Order 01-12), § 296-806-45538, filed 06/29/04, effective 01/01/05.]

296-806-45540 Inspect and maintain presses.

[Statutory Authority: RCW 49.17.010, .040, .050, and .060. 04-14-028 (Order 01-12), § 296-806-45540, filed 06/29/04, effective 01/01/05.]

Statutory Authority

296-806-45542 Make sure presses and operating practices used in the PSDI (presence sensing device initiation) mode of operation meet these requirements.

[Statutory Authority: RCW 49.17.010, .040, .050, and .060. 04-14-028 (Order 01-12), § 296-806-45542, filed 06/29/04, effective 01/01/05.]

296-806-460 Mills. Summary.

[Statutory Authority: RCW 49.17.010, .040, .050, and .060. 04-14-028 (Order 01-12), § 296-806-460, filed 06/29/04, effective 01/01/05.]

296-806-46002 Meet height requirements for mill rolls.

[Statutory Authority: RCW 49.17.010, .040, .050, and .060. 04-14-028 (Order 01-12), § 296-806-46002, filed 06/29/04, effective 01/01/05.]

296-806-46004 Provide mill safety controls.

[Statutory Authority: RCW 49.17.010, .040, .050, and .060. 04-14-028 (Order 01-12), § 296-806-46004, filed 06/29/04, effective 01/01/05.]

296-806-46006 Follow these stopping limit requirements for mills.

[Statutory Authority: RCW 49.17.010, .040, .050, and .060. 04-14-028 (Order 01-12), § 296-806-46006, filed 06/29/04, effective 01/01/05.]

296-806-465 Press brakes. Summary.

[Statutory Authority: RCW 49.17.010, .040, .050, and .060. 04-14-028 (Order 01-12), § 296-806-465, filed 06/29/04, effective 01/01/05.]

296-806-46502 Provide auxiliary safety aids on press brakes.

[Statutory Authority: RCW 49.17.010, .040, .050, and .060. 04-14-028 (Order 01-12), § 296-806-46502, filed 06/29/04, effective 01/01/05.]

Statutory Authority

296-806-46504 Safeguard the point of operation on press brakes.

[Statutory Authority: RCW 49.17.010, .040, .050, and .060. 04-14-028 (Order 01-12), § 296-806-46504, filed 06/29/04, effective 01/01/05.]

296-806-46506 Follow these requirements when using safe distance safeguarding.

[Statutory Authority: RCW 49.17.010, .040, .050, and .060. 04-14-028 (Order 01-12), § 296-806-46506, filed 06/29/04, effective 01/01/05.]

296-806-46508 Develop a safe distance safeguarding program for press brakes.

[Statutory Authority: RCW 49.17.010, .040, .050, and .060. 04-14-028 (Order 01-12), § 296-806-46508, filed 06/29/04, effective 01/01/05.]

296-806-46510 Follow these requirements for safe distance training for press brakes.

[Statutory Authority: RCW 49.17.010, .040, .050, and .060. 04-14-028 (Order 01-12), § 296-806-46510, filed 06/29/04, effective 01/01/05.]

296-806-46512 Require safe distance retraining for press brake operators.

[Statutory Authority: RCW 49.17.010, .040, .050, and .060. 04-14-028 (Order 01-12), § 296-806-46512, filed 06/29/04, effective 01/01/05.]

296-806-46514 Conduct periodic safe distance inspections on press brakes.

[Statutory Authority: RCW 49.17.010, .040, .050, and .060. 04-14-028 (Order 01-12), § 296-806-46514, filed 06/29/04, effective 01/01/05.]

296-806-46516 Supervise the safe distance program for press brakes.

[Statutory Authority: RCW 49.17.010, .040, .050, and .060. 04-14-028 (Order 01-12), § 296-806-46516, filed 06/29/04, effective 01/01/05.]

Statutory Authority

296-806-470 Roll-forming and bending machines. Summary.

[Statutory Authority: RCW 49.17.010, .040, .050, and .060. 04-14-028 (Order 01-12), § 296-806-470, filed 06/29/04, effective 01/01/05.]

296-806-47002 Follow these requirements for machine initiation.

[Statutory Authority: RCW 49.17.010, .040, .050, and .060. 04-14-028 (Order 01-12), § 296-806-47002, filed 06/29/04, effective 01/01/05.]

296-806-47004 Safeguard nip points of roll-forming and bending machines.

[Statutory Authority: RCW 49.17.010, .040, .050, and .060. 04-14-028 (Order 01-12), § 296-806-47004, filed 06/29/04, effective 01/01/05.]

296-806-475 Sanding machines. Summary.

[Statutory Authority: RCW 49.17.010, .040, .050, and .060. 04-14-028 (Order 01-12), § 296-806-475, filed 06/29/04, effective 01/01/05.]

296-806-47502 Guard drum sanders.

[Statutory Authority: RCW 49.17.010, .040, .050, and .060. 04-14-028 (Order 01-12), § 296-806-47502, filed 06/29/04, effective 01/01/05.]

296-806-47504 Guard disk sanders.

[Statutory Authority: RCW 49.17.010, .040, .050, and .060. 04-14-028 (Order 01-12), § 296-806-47504, filed 06/29/04, effective 01/01/05.]

296-806-47506 Guard belt sanders.

[Statutory Authority: RCW 49.17.010, .040, .050, and .060. 04-14-028 (Order 01-12), § 296-806-47506, filed 06/29/04, effective 01/01/05.]

296-806-47508 Follow these requirements for feed roll guarding.

[Statutory Authority: RCW 49.17.010, .040, .050, and .060. 04-14-028 (Order 01-12), § 296-806-47508, filed 06/29/04, effective 01/01/05.]

Machine Safety

Chapter 296-806 WAC

Statutory Authority

296-806-480 Saws and cutting heads. Summary.

[Statutory Authority: RCW 49.17.010, .040, .050, and .060. 04-14-028 (Order 01-12), § 296-806-480, filed 06/29/04, effective 01/01/05.]

296-806-48002 Protect employees using saws and cutting heads.

[Statutory Authority: RCW 49.17.010, .040, .050, and .060. 04-14-028 (Order 01-12), § 296-806-48002, filed 06/29/04, effective 01/01/05.]

296-806-48004 Make sure saws and cutting heads are sharpened and tensioned by qualified people.

[Statutory Authority: RCW 49.17.010, .040, .050, and .060. 04-14-028 (Order 01-12), § 296-806-48004, filed 06/29/04, effective 01/01/05.]

296-806-48006 Make sure saws are safe to use.

[Statutory Authority: RCW 49.17.010, .040, .050, and .060. 04-14-028 (Order 01-12), § 296-806-48006, filed 06/29/04, effective 01/01/05.]

296-806-48008 Make sure all circular saws meet these requirements.

[Statutory Authority: RCW 49.17.010, .040, .050, and .060. 04-14-028 (Order 01-12), § 296-806-48008, filed 06/29/04, effective 01/01/05.]

296-806-48010 Make sure circular saw gages meet these requirements.

[Statutory Authority: RCW 49.17.010, .040, .050, and .060. 04-14-028 (Order 01-12), § 296-806-48010, filed 06/29/04, effective 01/01/05.]

296-806-48012 Safeguard hand-fed circular table saws.

[Statutory Authority: RCW 49.17.010, .040, .050, and .060. 04-14-028 (Order 01-12), § 296-806-48012, filed 06/29/04, effective 01/01/05.]

Statutory Authority

296-806-48014 Provide kickback protection for employees using hand-fed circular table ripsaws when ripping wood products.

[Statutory Authority: RCW 49.17.010, .040, .050, and .060. 04-14-028 (Order 01-12), § 296-806-48014, filed 06/29/04, effective 01/01/05.]

296-806-48016 Safeguard self-feed circular saws.

[Statutory Authority: RCW 49.17.010, .040, .050, and .060. 04-14-028 (Order 01-12), § 296-806-48016, filed 06/29/04, effective 01/01/05.]

296-806-48018 Provide kickback protection for self-feed circular ripsaws when ripping wood products.

[Statutory Authority: RCW 49.17.010, .040, .050, and .060. 04-14-028 (Order 01-12), § 296-806-48018, filed 06/29/04, effective 01/01/05.]

296-806-48020 Guard circular resaws.

[Statutory Authority: RCW 49.17.010, .040, .050, and .060. 04-14-028 (Order 01-12), § 296-806-48020, filed 06/29/04, effective 01/01/05.]

296-806-48022 Provide spreaders for circular resaws.

[Statutory Authority: RCW 49.17.010, .040, .050, and .060. 04-14-028 (Order 01-12), § 296-806-48022, filed 06/29/04, effective 01/01/05.]

296-806-48024 Protect employees from automatic saw hazards.

[Statutory Authority: RCW 49.17.010, .040, .050, and .060. 04-14-028 (Order 01-12), § 296-806-48024, filed 06/29/04, effective 01/01/05.]

296-806-48026 Guard inverted swing (jump) saws.

[Statutory Authority: RCW 49.17.010, .040, .050, and .060. 04-14-028 (Order 01-12), § 296-806-48026, filed 06/29/04, effective 01/01/05.]

Statutory Authority

296-806-48028 Guard miter saws.

[Statutory Authority: RCW 49.17.010, .040, .050, and .060. 04-14-028 (Order 01-12), § 296-806-48028, filed 06/29/04, effective 01/01/05.]

296-806-48030 Guard radial saws.

[Statutory Authority: RCW 49.17.010, .040, .050, and .060. 04-14-028 (Order 01-12), § 296-806-48030, filed 06/29/04, effective 01/01/05.]

296-806-48032 Limit the travel of radial saws.

[Statutory Authority: RCW 49.17.010, .040, .050, and .060. 04-14-028 (Order 01-12), § 296-806-48032, filed 06/29/04, effective 01/01/05.]

296-806-48034 Provide kickback protection for radial saws used for ripping wood products.

[Statutory Authority: RCW 49.17.010, .040, .050, and .060. 04-14-028 (Order 01-12), § 296-806-48034, filed 06/29/04, effective 01/01/05.]

296-806-48036 Guard revolving double arbor saws.

[Statutory Authority: RCW 49.17.010, .040, .050, and .060. 04-14-028 (Order 01-12), § 296-806-48036, filed 06/29/04, effective 01/01/05.]

296-806-48038 Guard swing saws.

[Statutory Authority: RCW 49.17.010, .040, .050, and .060. 04-14-028 (Order 01-12), § 296-806-48038, filed 06/29/04, effective 01/01/05.]

296-806-48040 Limit the travel of swing saws.

[Statutory Authority: RCW 49.17.010, .040, .050, and .060. 04-14-028 (Order 01-12), § 296-806-48040, filed 06/29/04, effective 01/01/05.]

296-806-48042 Make sure band saws meet these requirements.

[Statutory Authority: RCW 49.17.010, .040, .050, and .060. 04-14-028 (Order 01-12), § 296-806-48042, filed 06/29/04, effective 01/01/05.]

Statutory Authority

296-806-48044 Protect employeees from drag saw hazards.

[Statutory Authority: RCW 49.17.010, .040, .050, and .060. 04-14-028 (Order 01-12), § 296-806-48044, filed 06/29/04, effective 01/01/05.]

296-806-48046 Maintain and balance knives and cutting heads.

[Statutory Authority: RCW 49.17.010, .040, .050, and .060. 04-14-028 (Order 01-12), § 296-806-48046, filed 06/29/04, effective 01/01/05.]

296-806-48048 Make sure boring and monitoring machines meet these requirements.

[Statutory Authority: RCW 49.17.010, .040, .050, and .060. 04-14-028 (Order 01-12), § 296-806-48048, filed 06/29/04, effective 01/01/05.]

296-806-48050 Follow these requirements for chipper mills.

[Statutory Authority: RCW 49.17.010, .040, .050, and .060. 04-14-028 (Order 01-12), § 296-806-48050, filed 06/29/04, effective 01/01/05.]

296-806-48052 Follow these requirements for hog mills.

[Statutory Authority: RCW 49.17.010, .040, .050, and .060. 04-14-028 (Order 01-12), § 296-806-48052, filed 06/29/04, effective 01/01/05.]

296-806-48054 Protect employees from falling into chipper and hog mills.

[Statutory Authority: RCW 49.17.010, .040, .050, and .060. 04-14-028 (Order 01-12), § 296-806-48054, filed 06/29/04, effective 01/01/05.]

296-806-48056 Make sure jointers with horizontal cutting heads meet these requirements.

[Statutory Authority: RCW 49.17.010, .040, .050, and .060. 04-14-028 (Order 01-12), § 296-806-48056, filed 06/29/04, effective 01/01/05.]

Machine Safety

Chapter 296-806 WAC

Statutory Authority

296-806-48058 Guard horizontal cutting heads on hand-fed jointers.

[Statutory Authority: RCW 49.17.010, .040, .050, and .060. 04-14-028 (Order 01-12), § 296-806-48058, filed 06/29/04, effective 01/01/05.]

296-806-48060 Guard vertical cutting heads on jointers.

[Statutory Authority: RCW 49.17.010, .040, .050, and .060. 04-14-028 (Order 01-12), § 296-806-48060, filed 06/29/04, effective 01/01/05.]

296-806-48062 Make sure molding, sticking and matching machines meet these requirements.

[Statutory Authority: RCW 49.17.010, .040, .050, and .060. 04-14-028 (Order 01-12), § 296-806-48062, filed 06/29/04, effective 01/01/05.]

296-806-48064 Guard hand-fed panel raisers and other similar machines.

[Statutory Authority: RCW 49.17.010, .040, .050, and .060. 04-14-028 (Order 01-12), § 296-806-48064, filed 06/29/04, effective 01/01/05.]

296-806-48066 Make sure planers with a horizontal cutting head meet these requirements.

[Statutory Authority: RCW 49.17.010, .040, .050, and .060. 04-14-028 (Order 01-12), § 296-806-48066, filed 06/29/04, effective 01/01/05.]

296-806-48068 Guard planers.

[Statutory Authority: RCW 49.17.010, .040, .050, and .060. 04-14-028 (Order 01-12), § 296-806-48068, filed 06/29/04, effective 01/01/05.]

296-806-48070 Guard planer feed rolls.

[Statutory Authority: RCW 49.17.010, .040, .050, and .060. 04-14-028 (Order 01-12), § 296-806-48070, filed 06/29/04, effective 01/01/05.]

Statutory Authority

296-806-48072 Provide kickback protection on planers running stock of varied thicknesses.

[Statutory Authority: RCW 49.17.010, .040, .050, and .060. 04-14-028 (Order 01-12), § 296-806-48072, filed 06/29/04, effective 01/01/05.]

296-806-48074 Make sure shapers meet these requirements.

[Statutory Authority: RCW 49.17.010, .040, .050, and .060. 04-14-028 (Order 01-12), § 296-806-48074, filed 06/29/04, effective 01/01/05.]

296-806-48076 Guard tenoning machine feed chains and sprockets.

[Statutory Authority: RCW 49.17.010, .040, .050, and .060. 04-14-028 (Order 01-12), § 296-806-48076, filed 06/29/04, effective 01/01/05.]

296-806-48078 Guard tenoning machines.

[Statutory Authority: RCW 49.17.010, .040, .050, and .060. 04-14-028 (Order 01-12), § 296-806-48078, filed 06/29/04, effective 01/01/05.]

296-806-48080 Guard veneer cutters and wringer knives.

[Statutory Authority: RCW 49.17.010, .040, .050, and .060. 04-14-028 (Order 01-12), § 296-806-48080, filed 06/29/04, effective 01/01/05.]

296-806-48082 Guard veneer clippers.

[Statutory Authority: RCW 49.17.010, .040, .050, and .060. 04-14-028 (Order 01-12), § 296-806-48082, filed 06/29/04, effective 01/01/05.]

296-806-48084 Follow these requirements for guarding guillotine cutters.

[Statutory Authority: RCW 49.17.010, .040, .050, and .060. 04-14-028 (Order 01-12), § 296-806-48084, filed 06/29/04, effective 01/01/05.]

Machine Safety

Chapter 296-806 WAC

Statutory Authority

296-806-48086 Provide mechanisms to stop power-driven guillotine cutters.

[Statutory Authority: RCW 49.17.010, .040, .050, and .060. 04-14-028 (Order 01-12), § 296-806-48086, filed 06/29/04, effective 01/01/05.]

296-806-48088 Prohibit riders on veneer slicer carriages.

[Statutory Authority: RCW 49.17.010, .040, .050, and .060. 04-14-028 (Order 01-12), § 296-806-48088, filed 06/29/04, effective 01/01/05.]

296-806-485 Sewing machines. Summary.

[Statutory Authority: RCW 49.17.010, .040, .050, and .060. 04-14-028 (Order 01-12), § 296-806-485, filed 06/29/04, effective 01/01/05.]

296-806-48502 Guard sewing machine needles.

[Statutory Authority: RCW 49.17.010, .040, .050, and .060. 04-14-028 (Order 01-12), § 296-806-48502, filed 06/29/04, effective 01/01/05.]

296-806-500 Definitions.

[Statutory Authority: RCW 49.17.010, .040, .050, and .060. 04-14-028 (Order 01-12), § 296-806-500, filed 06/29/04, effective 01/01/05.]

Machine Safety

Chapter 296-806 WAC

Statutory Authority

http://www.lni.wa.gov/