Table of Contents
Chapter 296-155 WAC Construction Work

Part A

General Safety and Health Provisions.

Foreword.

296-155-001

Subsections, subdivisions, items, subitems, and segments

296-155-003

Purpose and scope.

296-155-005

Equipment approved by nonstate agency or organization.

296-155-006

Incorporation of standards of national organization.

296-155-007

Incorporation of standards of federal agency.

296-155-008

Equipment whether or not owned by, or under the control of the employer.

296-155-009

Variance and procedure

296-155-010

Definitions applicable to all sections of this chapter.

296-155-012

Education and first-aid standards.

296-155-115

Housekeeping.

296-155-020

Acceptable certifications.

296-155-030

General requirements.

296-155-035

Safe place standards.

296-155-040

Part B-1

Occupational Health and Environmental Control.

Management's responsibility.

296-155-100

Employee's responsibility.

296-155-105

Accident prevention program.

296-155-110

Safety bulletin board.

296-155-115

First-aid training and certification.

296-155-120

First-aid kit.

296-155-125

First-aid station.

296-155-130

Sanitation.

296-155-140

Occupational noise exposure.

296-155-145

Ionizing radiation.

296-155-150

Nonionizing radiation.

2961-55-155

Gases, vapors, fumes, dusts, and mists.

296-155-160

Lighting and illumination.

296-155-165

Ventilation.

296-155-170

Methylenedianline.

296-155-173

Scope and application.

296-155-17301

Definitions.

296-155-17303

Permissible exposure limits.

296-155-17305

Communication among employers.

296-155-17307

Emergency situations.

296-155-17309

Exposure monitoring.

296-155-17311

Regulated areas.

296-155-17313

Methods of compliance.

296-155-17315

Respiratory protection.

296-155-17317

Protective work clothing and equipment.

296-155-17319

Hygiene facilities and practices.

296-155-17321

Communication of hazards to employees.

296-155-17323

Housekeeping.

296-155-17325

Medical surveillance.

296-155-17327

Medical removal.

296-155-17329

Recordkeeping.

296-155-17331

Observation of monitoring.

296-155-17333

Appendicies.

296-155-17337

Startup dates.

296-155-17339

Appendix A to WAC 296-155-173-Substance data sheet, for 4-4'-Methylenedianilne.

296-155-17341

Appendix B to WAC 296-155-173-Substance technical guidelines, MDA.

296-155-17343

Appendix C to WAC 296-155-173-Medical surveillance guidelines for MDA.

296-155-17345

Appendix D to AWC 296-155-173-Sampling and analytical methods for MDA monitoring and measurement procedures.

296-155-17347

Cadmium.

296-155-174

Lead.

296-155-176

Scope.

296-155-17603

Definitions.

296-155-17605

Permissible exposure limit.

296-155-17607

Exposure assessment.

296-155-17609

Methods of compliance.

296-155-17611

Respiratory protection.

296-155-17613

Protective work clothing and equipment.

296-155-17615

Housekeeping.

296-155-17617

Hygiene facilities and practices.

296-155-17619

Medical surveillance.

296-155-17621

Medical removal protection.

296-155-17623

Employee information and training.

296-155-17625

Signs.

296-155-17627

Recordkeeping.

296-155-17629

Observation of monitoring.

296-155-17631

Appendix A to WAC 296-155-176-Substance data sheet for occupational exposure to lead.

296-155-17650

Appendix B to WAC 296-155-176-Employee standard summary.

296-155-17652

Appendix C to WAC 296-155-176-Medical surveillance guidelines.

296-155-17654

Part B-2

Hazard Communication.

Hazard communication-General.

296-155-180

Part C

Personal Protective and Life Saving Equipment.

General requirements.

296-155-200

Definitions applicable to this chapter.

296-155-201

Confined spaces.

296-155-203

Definitions.

296-155-20301

Confined space work on sewer systems under construction.

296-155-20307

Head protection.

296-155-205

Hearing protection.

296-155-210

Leg protection.

296-155-211

Eye and face protection.

296-155-215

Respiratory protection.

296-155-220

Working over or adjacent to water.

296-155-235

Sterilization of protective equipment.

296-155-240

Part C-1

Fall Restraint and Fall Arrest.

Reserved.

296-155-245

Scope and application.

296-155-24501

Definitions.

296-155-24503

Fall protection work plan.

296-155-24505

Reserved.

296-155-24507

Fall restraint, fall arrest systems.

296-155-24510

Guarding of low pitched roof perimeters.

296-155-24515

Reserved.

296-155-24519

Leading edge control zone.

296-155-24520

Safety monitor system.

296-155-24521

Reserved.

296-155-24522

Appendix A to Part C-1-Determining roof widths nonmandatory guidelines for complying with WAC 296-155-24515(2)(b).

296-155-24523

Reserved.

296-155-24524

Appendix B to Part C-1-Fall restraint and fall arrest (employer information only).

296-155-24525

Part D

Fire Protection and Prevention.

Definitions applicable to this part.

296-155-250

Fire protection.

296-155-260

Fire prevention.

296-155-265

Flammable and combustible liquids.

296-155-270

Liquefied petroleum gas (LP-gas).

296-155-275

Temporary heating devices.

296-155-280

Part E

Signs, Signals and Barricades.

Accident prevention signs and tags.

296-155-300

Signaling and flaggers.

296-155-305

Barricades.

296-155-310

Definitions applicable to this part.

296-155-315

Part F

Material Handling, Storage, Use and Disposal.

General requirements for storage.

296-155-325

Qualified person-Rigging.

296-155-329

Rigging equipment for material handling.

296-155-330

Disposal of waste materials.

296-155-335

Part G

Tools-Hand and Power.

General requirements.

296-155-350

Hand tools.

296-155-355

Power-operated hand tools.

296-155-360

Safety requirements for power actuated fastening systems, in accordance with ANSI A10.3-1985, Safety Requirements for Power Actuated Fastening Systems.

296-155-363

Scope.

296-155-36301

Purpose.

296-155-36303

Definitions applicable to this section.

296-155-36305

Requirements.

296-155-36307

Power loads.

296-155-36309

Fasteners.

296-155-36311

Operation.

296-155-36313

Limitations of use.

296-155-36315

Maintenance and storage.

296-155-36317

Authorized instructor.

296-155-36319

Qualified operator.

296-155-36321

Abrasive wheels and tools.

296-155-365

Masonry saws.

296-155-367

Woodworking tools.

296-155-370

Jacks-Lever and ratchet, screw, and hydraulic.

296-155-375

Air receivers.

296-155-380

Part H

Welding and Cutting.

Gas welding and cutting.

296-155-400

Arc welding and cutting.

296-155-405

Protective clothing.

296-155-407

Fire prevention.

296-155-410

Ventilation and protection in welding, cutting, and heating.

296-155-415

Welding, cutting, and heating in way of preservative coatings.

296-155-420

Part I

Electrical.

Introduction.

296-155-426

General requirements.

296-155-428

Lockout and tagging of circuits.

296-155-429

Maintenance of equipment.

296-155-432

Environmental deterioration of equipment.

296-155-434

Batteries and battery charging.

296-155-437

Applicability.

296-155-441

General requirements.

296-155-444

Wiring design and protection.

296-155-447

Wiring methods, components, and equipment for general use.

296-155-449

Specific purpose equipment and installations.

296-155-452

Hazardous (classified) locations.

296-155-456

Special systems.

296-155-459

Definitions applicable to this part.

296-155-462

Part J

Stairways and Ladders.

Scope and application.

296-155-475

Definitions applicable to this part.

296-155-47501

General requirements.

296-155-476

Stairways.

296-155-477

Ladders.

296-155-480

Training requirements.

296-155-48060

Appendix A.

296-155-48080

Reserved.

296-155-48090

Part J-1

Scaffolds.

Scope and application.

296-155-481

Definitions applicable to this part.

296-155-482

General requirements.

296-155-483

Additional requirements applicable to specific types of scaffolds.

296-155-484

Reserved.

296-155-485

Manually propelled elevating work platforms.

296-155-487

Self propelled elevating work platforms.

296-155-488

Boom supported elevating work platforms.

296-155-489

Aerial lifts.

296-155-490

Training.

296-155-493

Nonmandatory Appendix A to Part J-1-Scaffold Specifications.

296-155-494

Nonmandatory Appendix C to Part J-1-List of National Consensus Standards.

296-155-496

Nonmandatory Appendix D to Part J-1-List of Training Topics for Scaffold Erectors and Dismantlers.

296-155-497

Nonmandatory Appendix E to Part J-1-Drawings and Illustrations.

296-155-498

Part K

Floor Openings, Wall Openings and Stairways.

Definitions applicable to this part.

296-155-500

Guardrails, handrails and covers.

296-155-505

Roofing brackets.

296-155-50503

Reserved.

296-155-50505

Reserved.

296-155-510

Ramps, runways, and inclined walkways.

296-155-515

Part L

Cranes, Derricks, Hoists, Elevators, and Conveyors.

Cranes and derricks.

296-155-525

Crane attached personnel platforms.

296-155-526

Appendix A to WAC 296-155-525.

296-155-527

Crane or derrick suspended personnel platform.

296-155-528

Material hoists, personnel hoists, and elevators.

296-155-530

Base-mounted drum hoists.

296-155-535

Overhead hoists.

296-155-540

Conveyors.

296-155-545

Aerial cableways.

296-155-550

Gin poles.

296-155-555

Concrete bucket towers.

296-155-560

Hoisting engines.

296-155-565

Rigging-Wire rope.

296-155-570

Helicopters and helicopter cranes.

296-155-575

Part M

Motor Vehicles, Mechanized Equipment, and Marine Operations

Definitions applicable to this part.

296-155-600

Equipment.

296-155-605

Motor vehicles.

296-155-610

Material handling equipment.

296-155-615

Servicing multipiece and single-piece rim wheels.

296-155-617

Scope.

296-155-61701

Definitions.

296-155-61703

Employee training.

296-155-61705

Tire servicing equipment.

296-155-61707

Wheel component acceptability.

296-155-61709

Safe operating procedure-Multipiece rim wheels.

296-155-61711

Safe operating procedure-Single-piece rim wheels.

296-155-61713

Pile driving equipment.

296-155-620

Site clearing.

296-155-625

Marine operations and equipment.

296-155-630

Part N

Excavation, Trenching, and Shoring.

Scope, application, and definitions applicable to this part.

296-155-650

General protection requirements.

296-155-655

Requirements for protective systems.

296-155-657

Reserved.

296-155-66103

Reserved.

296-155-66105

Reserved.

296-155-66109

Appendices.

296-155-664

Appendix A-Soil classification.

296-155-66401

Appendix B-Sloping and benching.

296-155-66403

Appendix C-Timber shoring for trenches.

296-155-66405

Appendix D-Aluminum hydraulic shoring for trenches.

296-155-66407

Appendix E-Alternatives to timber shoring.

296-155-66409

Appendix F-Selection of protective systems.

296-155-66411

Part O

Concrete, Concrete Forms, Shoring, and Masonry Construction

Scope, application, and definitions applicable to this part.

296-155-675

General provisions.

296-155-680

Safe walking surfaces on concrete structural members.

296-155-681

Requirements for equipment and tools.

296-155-682

Concrete finishing.

296-155-683

Requirements for cast in place concrete.

296-155-684

Tubular welded frame shoring.

296-155-685

Tube and coupler shoring.

296-155-686

Single post shores.

296-155-687

Vertical slip forms.

296-155-688

Placing and removal of forms.

296-155-689

Appendix to WAC 296-155-684-Cast in place concrete.

296-155-690

Precast concrete and tilt-up operations.

296-155-691

Requirements for lift-slab construction operations.

296-155-694

Miscellaneous concrete construction.

296-155-695

Requirements for masonry construction.

296-155-697

Appendix A to Part O-References to Part O of Chapter 296-155 WAC.

296-155-699

Part P

Steel Erection.

General requirements.

296-155-700

Flooring requirements.

296-155-705

Structural steel assembly.

296-155-710

Bolting, riveting, fitting-up, and plumbing-up.

296-155-715

Safe walking surfaces on structural members.

296-155-720

Part Q

Underground Construction.

Definitions applicable to this part.

296-155-725

Tunnels and shafts.

296-155-730

Caissons.

296-155-735

Cofferdams.

296-155-740

Compressed air.

296-155-745

Appendix A-Decompression tables.

296-155-74501

Part R

Miscellaneous Construction Requirements.

Roofing, insulataing and waterproofing.

296-155-755

Rock crushing, gravel washing, and hot mix plants.

296-155-765

Moving of structures.

296-155-770

Part S

Demolition.

Preparatory operations.

296-155-775

Stairs, passageways, and ladders.

296-155-780

Chutes.

296-155-785

Removal of materials through floor openings.

296-155-790

Removal of walls, masonry sections, and chimneys.

296-155-795

Manual removal of floors.

296-155-800

Removal of walls, floors, and material with equipment.

296-155-805

Catch platforms.

296-155-810

Storage.

296-155-815

Removal of steel construction.

296-155-820

Mechanical demolition.

296-155-825

Selective demolition by explosive.

296-155-830

Part T

Possession, Handling, and Use of Explosives

Refer to Chapter 296-52 WAC.

Part U

Power Distribution and Transmission Lines.

Refer to Chapter 296-45 WAC.

Part V

Rollover Protective Structures and Overhead Protection.

Rollover protective structures (ROPS) for material handling equipment.

296-155-950

Minimum performance criteria for ROPS for designated scrapers, loaders, dozers, graders, and crawler tractors.

296-155-955

Protective frame (ROPS) test procedures and performance requirements for wheel-type agricultural and industrial tractors used in construction.

296-155-960

Overhead protection for operators of agricultural and industrial tractors.

296-155-965

PART A
GENERAL SAFETY AND HEALTH PROVISIONS

WAC 296-155-001 Foreword.

(1) This chapter has been compiled with the purpose of consolidating safety and health construction safety standards into one chapter of the Washington Administrative Code, by the promulgation of the standards contained herein. It is also the intent that the safety standards of the Washington state department of labor and industries, will be at least as effective as those adopted by the U.S. Department of Labor and administered by the Occupational Safety and Health Administration as published in the Code of Federal Regulations. The department of labor and industries is incorporating many of the preexisting construction safety standards and adding new standards under this chapter.

(2) Attention is called to the fact that certain Washington state standards contain standards and/or regulations applicable to all industries. These include, but are not limited to: The code for boilers and pressure vessels; the code for pressure piping; the general industrial safety and health standards; the general occupational health standards; regulations of the department of social and health services..

[Statutory Authority: Chapter 49.17 RCW. 94-15-096 (Order 94-07), § 296-155-001, filed 7/20/94, effective 9/20/94; Order 76-29, § 296-155-001, filed 9/30/76; Order 74-26, 296-155-001, filed 5/7/74, effective 6/6/74.]

WAC 296-155-003 Subsections, subdivisions, items, subitems, and segments.

(1) That portion of section numeration appearing after the chapter designation appears in either a three digit or a five digit format (e.g. WAC 296-24-330 and 296-24-30002). The final two digits of the section number are implied decimal extensions of the first three digits and represent a further division of the three digit enumeration.

(2) Sections of this chapter may be divided into subsections (1), (2), (3), etc., which may in turn be divided into subdivisions (a), (b), (c), etc., which may be further divided into items (i), (ii), (iii), etc., which may be further divided into subitems (A), (B), (C), etc., which may be further divided into segments (aa) [(I)], (bb) [(II)], (cc) [(III)], etc., all according to the following hierarchy, e.g.

Sections	296-24-330 and
	296-24-33002
Subsections	(1)
	(2)
Subdivisions	(a)
	(b)
Items	(i)
	(ii)
Subitems	(A)
	(B)
Segments	I
	II

Note: ***"Part"*** *as used in this standard means a major division of this chapter relating to a specific topic or topics and containing various related sections.*

[Statutory Authority: RCW 49.17.040 and 49.17.050. 86-03-074 (Order 86-14), § 296-155-003, filed 1/21/86; Order 74-26, § 296-155-003, filed 5/7/74, effective 6/6/74.]

WAC 296-155-005 Purpose and scope.

(1) The standards included in this chapter apply throughout the state of Washington, to any and all work places subject to the Washington Industrial Safety and Health Act (chapter 49.17 RCW), where construction, alteration, demolition, related inspection, and/or maintenance and repair work, including painting and decorating, is performed. These standards are minimum safety requirements with which all industries must comply when engaged in the above listed types of work.

(2) If a provision of this chapter conflicts with a provision of the general safety and health standard (chapter 296-24 WAC), the general occupational health standard (chapter 296-62 WAC), or the safety and health core rules (chapter 296-800 WAC), the provision of this chapter shall prevail. When a provision of this chapter conflicts with a provision of another vertical safety standard applying to the place of work, the provisions of the vertical standard of specific application shall prevail.

[Statutory Authority: RCW 49.17.010, .040, .050. 01-11-038 (Order 99-36), § 296-155-005, filed 05/09/01, effective 09/01/01. Statutory Authority: RCW 49.17.040 and 49.17.050. 86-03-074 (Order 86-14), § 296-155-005, filed 1/21/86. Statutory Authority: RCW 49.17.040, 49.17.050, 49.17.240, chapters 42.30 and 43.22 RCW. 80-17-014 (Order 80-20), § 296-155-005, filed 11/13/80; Order 76-29, § 296-155-005, filed 9/30/76; Order 74-26, § 296-155-005, filed 5/7/74, effective 6/6/74.]

WAC 296-155-006 Equipment approval by nonstate agency or organization.

Whenever a provision of this chapter states that only that equipment or those processes approved by an agency or organization other than the department of labor and industries, such as the Underwriters Laboratories or the Mine Safety and Health Administration (MSHA) and the National Institute for Occupational Safety and Health (NIOSH), shall be utilized, that provision shall be construed to mean that approval of such equipment or process by the designated agency or group shall be prima facie evidence of compliance with the provisions of this chapter.

[Statutory Authority: Chapter 49.17 RCW. 94-15-096 (Order 94-07), filed 07/20/94, effective 09/2094; Order 74-26, § 296-155-006, filed 5/7/74, effective 6/6/74.]

WAC 296-155-007 Incorporation of standards of national organization.

Whenever a provision of this chapter incorporates by reference a national code or portion thereof which has been adopted by and is currently administered by another state agency, compliance with those provisions adopted and administered by such other state agency, if from a more recent edition of such national code, will be deemed to be prima facie evidence of compliance with the provisions of this chapter.

[Order 74-26, § 296-155-007, filed 5/7/74, effective 6/6/74.]

WAC 296-155-008 Incorporation of standards of federal agency.

(1) Whenever a provision of this chapter incorporates therein provisions of the Code of Federal Regulations (CFR) and changes thereto, or any other regulations adopted by an agency of the federal government, that provision of this chapter shall be construed to mean that compliance with such regulations shall be prima facie evidence of compliance with the provisions of this chapter.

(2) Whenever a provision of this chapter incorporates therein provisions of the Code of Federal Regulations, the provisions so incorporated shall be those in effect on the date of effectiveness of this chapter, unless the content of the incorporating section specifies otherwise.

[Order 76-29, § 296-155-008, filed 9/30/76; Order 74-26, § 296-155-008, filed 5/7/74, effective 6/6/74.]

WAC 296-155-009 Equipment whether or not owned by, or under control of the employer.

(1) It is the employer's responsibility to ensure that any defective equipment or tools are not used.

(2) When any tool or piece of equipment fails to meet the requirements of any safety standard or recognized safe practice, the tool or equipment shall not be used.

[Statutory Authority: RCW 49.17.040 and 49.17.050. 86-03-074 (Order 86-14), § 296-155-009, filed 1/21/86.]

WAC 296-155-010 Variance and procedure.

Realizing that conditions may exist in operations under which certain state standards will not have practical application, the director of the department of labor and industries or his/her authorized representative may, pursuant to this section, sections eight or nine of the Washington Industrial Safety and Health Act (chapter 80, Laws of 1973, RCW 49.17.080 and 49.17.090) and appropriate administrative rules of this state and the department of labor and industries and upon receipt of application and after adequate investigation by the department, permit a variation from these requirements when other means of providing an equivalent measure of protection are afforded. Such variation granted shall be limited to the particular case or cases covered in the application for variance and may be revoked for cause. The order granting a variance shall be conspicuously posted on the premises and shall remain posted during the time it is in effect. A copy of the variance shall be available at the work site. All requests for variances from safety and health standards included in this chapter, shall be made in writing to the director of the department of labor and industries at Olympia, Washington, or his/her duly authorized representative, Department of Labor and Industries, P.O. Box 44600, Olympia, Washington 98504-4600.
[Statutory Authority: Chapter 49.17 RCW. 94-15-096 (Order 94-07), § 296-155-010, filed 7/20/94, effective 9/20/94; Statutory Authority: RCW 49.17.040 and 49.17.050. 86-03-074 (Order 86-14), § 296-155-010, filed 1/21/86; Order 74-26, 296-155-010, filed 5/7/74, effective 6/6/74.]

WAC 296-155-012 Definitions applicable to all sections of this chapter.

Note: Unless the context indicates otherwise, words used in this chapter shall have the meaning given in this section. Certain parts of this chapter contain definitions as they apply to that particular part.

"Approved" means approved by the director of the department of labor and industries or his/her authorized representative: Provided, however, That should a provision of this chapter state that approval by an agency or organization other than the department of labor and industries is required, such as Underwriters' Laboratories or the bureau of mines, the provisions of WAC 296-155-006 shall apply.

"Assistant director" means the individual in charge of the division of consultation and compliance, department of labor and industries, or an authorized representative.

"Authorized person" means a person approved or assigned by the employer to perform a specific type of duty or duties or be at a specific location or locations at the workplace.

"Competent person" means one who is capable of identifying existing and predictable hazards in the surroundings or working conditions which are unsanitary, hazardous, or dangerous to employees, and who has authorization to take prompt corrective action to eliminate them.

"Confined space" means a space that:

(1) Is large enough and so configured that an employee can bodily enter and perform assigned work; and

(2) Has limited or restricted means for entry or exit (for example, tanks, vessels, silos, storage bins, hoppers, vaults, and pits are spaces that may have limited means of entry); and

(3) Is not designed for continuous employee occupancy.

"Construction work" shall mean and include all or any part of excavation, construction, erection, alteration, repair, demolition, and dismantling, of buildings and other structures and all operations in connection therewith; the excavation, construction, alteration and repair of sewers, trenches, caissons, conduits, pipe lines, roads and all operations pertaining thereto; the moving of buildings and other structures, and to the construction, alteration, repair, or removal of wharfs, docks, bridges, culverts, trestles, piers, abutments or any other construction, alteration, repair or removal work related thereto.

WAC 296-155-012 (Cont.)

"Defect" means any characteristic or condition which tends to weaken or reduce the strength of the tool, object, or structure of which it is a part.

"Department" means the department of labor and industries.

"Designated person" means **"authorized person"** as defined in this section.

"Director" means the director of the department of labor and industries, or his/her designated representative.

"Division" means the division of consultation and compliance of the department.

"Employer" means any person, firm, corporation, partnership, business trust, legal representative, or other business entity which engages in any business, industry, profession, or activity in this state and employs one or more employees or who contracts with one or more persons, the essence of which is the personal labor of such person or persons and includes the state, counties, cities, and all municipal corporations, public corporations, political subdivisions of the state, and charitable organizations: Provided, that any person, partnership, or business entity not having employees, and who is covered by the industrial insurance act shall be considered both an employer and an employee.

"Equipment" means all machinery, devices, tools, facilities, safeguards, and protective construction used in connection with construction operations.

"Ground fault circuit interrupter" means a fast acting circuit breaker that is sensitive to very low levels of current leakage to ground. The device is designed to limit the electric shock to a current and time duration below that which can cause serious injury.

"Hazard" means that condition, potential or inherent, which is likely to cause injury, death, or occupational disease.

"Hazardous substance" means a substance which, by reason of being explosive, flammable, poisonous, corrosive, oxidizing, irritating, or otherwise harmful, is likely to cause death or injury.

"Maintenance" means the work of keeping a building, machine, roadway, etc., in a state of good repair.

"Part" means a major division, of this chapter, relating to a specific topic or topics and containing various sections, subsections, etc.

"Permit-required confined space (permit space)" means a confined space that has one or more of the following characteristics:

(1) Contains or has a potential to contain a hazardous atmosphere;

(2) Contains a material that has the potential for engulfing an entrant;

(3) Has an internal configuration such that an entrant could be trapped or asphyxiated by inwardly converging walls or by a floor which slopes downward and tapers to a smaller cross-section; or

(4) Contains any other recognized serious safety or health hazard.

"Qualified" means one who, by possession of a recognized degree, certificate, or professional standing, or who by extensive knowledge, training, and experience, has successfully demonstrated their ability to solve or resolve problems relating to the subject matter, the work, or the project.

WAC 296-155-012 (Cont.)

"Repair" means to restore a building, machine, roadway, etc., to an original state after damage or decay.

"Safety factor" means the ratio of the ultimate breaking strength of a member or piece of material or equipment to the actual working stress or safe load when in use.

"Safety and health standard" means a standard which requires the adoption or use of one or more practices, means, methods, operations, or processes reasonably necessary or appropriate to provide safe or healthful employment and places of employment.

"Shall" means that the provision(s) of the standard are mandatory.

"Substantial" means constructed of such strength, of such material, and of such workmanship, that the object referred to will withstand all normal wear, shock and usage.

"Standard safeguard" means a device designed and constructed with the object of removing the hazard of accident incidental to the machine, appliance, tool, building, or equipment to which it is attached.

Standard safeguards shall be constructed of either metal or wood or other suitable material or a combination of these. The final determination of the sufficiency of any safeguard rests with the director of the department of labor and industries through the division of consultation and compliance.

"Suitable" means that which fits, or has the qualities or qualifications to meet a given purpose, occasion, condition, function, or circumstance.

"Working day" means a calendar day, except Saturdays, Sundays, and legal holidays as set forth in RCW 1.16.050, as now or hereafter amended, and for the purposes of the computation of time within which an act is to be done under the provisions of this chapter, shall be computed by excluding the first working day and including the last working day.

"Worker," "personnel," "man," "person," "employee," and other terms of like meaning, unless the context of the provision containing such term indicates otherwise, mean an employee of an employer who is employed in the business of their employer whether by way of manual labor or otherwise and every person in this state who is engaged in the employment of or who is working under an independent contract the essence of which is their personal labor for an employer whether by manual labor or otherwise.

"Work place" means any plant, yard, premises, room, or other place where an employee or employees are employed for the performance of labor or service over which the employer has the right of access or control, and includes, but is not limited to, all work places covered by industrial insurance under Title 51 RCW, as now or hereafter amended.

Abbreviations used in this chapter:

"ANSI" means American National Standards Institute.
"API" means American Petroleum Institute.
"ASA" means American Standards Association.
"ASAE" means American Society of Agricultural Engineers.
"ASHRE" means American Society of Heating and Refrigeration Engineers.
"ASME" means American Society of Mechanical Engineers.
"ASTM" means American Society of Testing and Materials.
"AWS" means American Welding Society.
"BTU" means British thermal unit.
"BTUH" means British thermal unit per hour.

"CFM" means cubic feet per minute.

WAC 296-155-012 (Cont.)

"CFR" means Code of Federal Register.
"CGA" means Compressed Gas Association.
"CIE" means Commission Internationale de l' Eclairage.
"**DOT"** means department of transportation.
"FRP" means fiberglass reinforced plastic.
"GPM" means gallons per minute.
"ICC" means Interstate Commerce Commission.
"ID" means inside diameter.
"LPG" means liquefied petroleum gas.
"MCA" means Manufacturing Chemist Association.
"MSHA" means United States Department of Labor, Mine Safety and Health Administration.
"NBFU" means National Board of Fire Underwriters.
"NEMA" means National Electrical Manufacturing Association.
"NFPA" means National Fire Protection Association.
"NTP" means normal temperature and pressure.
"OD" means outside diameter.
"PSI" means pounds per square inch.
"PSIA" means pounds per square inch absolute.
"PSIG" means pounds per square inch gauge.
"RMA" means Rubber Manufacturers Association.
"SAE" means Society of Automotive Engineers.
"TFI" means The Fertilizer Institute.
"**TSC"** means Trailer Standard Code.
"UL" means Underwriters' Laboratories, Inc.
"USASI" means United States of America Standards Institute.
"USC" means United States Code.
"USCG" means United States Coast Guard.
"WAC" means Washington Administrative Code.
"WISHA" means Washington Industrial Safety and Health Act of 1973.

[Statutory Authority: Chapter 49.17 RCW. 95-04-007 (Order 94-24), § 296-155-012, filed 1/18/95, effective 3/1/95; RCW 49.17.040 and 49.17.050. 86-03-074 (Order 86-14), § 296-155-012, filed 1/21/86; Order 74-26, § 296-155-012, filed 5/7/74, effective 6/6/74.]

WAC 296-155-015 Education and first-aid standards.

It shall be the duty of every employer to comply with such standards and systems of education for safety as shall be, from time to time, prescribed for such employer by the director of labor and industries or by statute. Refer to WAC 296-155-100 through 296-155-135 for additional requirements.

[Statutory Authority: Chapter 49.17 RCW. 94-15-096 (Order 94-07), § 296-155-015, filed 7/20/94, effective 9/20/94; Order 74-26, § 296-155-015, filed 5/7/74, effective 6/6/74.]

WAC 296-155-020 Housekeeping.

(1) All places of employment shall be kept clean to the extent that the nature of the work allows.

(2) To facilitate cleaning, every floor, working surface, and passageway shall be kept free from protruding nails, splinters, loose boards or openings.

(3) Cleaning and sweeping shall be performed in such a manner as to minimize the contamination of the air with dust.

WAC 296-155-020 (Cont.)

(4) In areas where workers may pass or perform duties, all debris and accumulations of material shall be removed. Hoses and electrical conductors across aisles or passageways shall be covered or suspended overhead so that there is no tripping hazard.

(5) Where mechanical handling equipment is used, sufficient safe clearances shall be allowed for aisles, at loading docks, through doorways and wherever turns or passages must be made. Such aisles and passageways shall be marked.

(6) Storage of material shall not create a hazard. Bags, containers, bundles, construction materials and other equipment shall be stored in tiers, stacked, blocked or interlocked. They shall be limited in height so that they are stable and secure against falling, sliding, or collapse.

(7) Free access shall be maintained at all times to all exits, fire alarm boxes, fire extinguishing equipment, and any other emergency equipment. Free access means clear of all obstructions.

(8) Working and storage areas shall be kept free from accumulation of materials that pose hazards of tripping, fire, explosion, or pest harborage. Vegetation control shall be exercised.

(9) All lunchrooms, washrooms and restrooms shall be kept in a clean and sanitary condition. Garbage cans in lunchrooms and restrooms shall be equipped with fitted covers and the contents disposed of daily.

(10) During the course of construction, alteration, repair or demolition of buildings and structures, employers shall ensure continuous clean-up of their work area, including removal of all rubble, scrap, boxes, crates and excess material to trash disposal areas.

(11) Containers shall be provided for the collection and separation of waste, trash, oily or used rags, and other refuse. Containers used for garbage and other oily, flammable or hazardous wastes, such as caustics, acids, harmful dusts or similar materials shall be equipped with covers. Common garbage and other waste shall be disposed of at frequent and regular intervals. Chemical agents or substances which might react to create a hazardous condition shall be stored and disposed of separately. All hazardous wastes which are subject to the requirements of chapter 173-303 WAC shall be handled, accumulated and disposed of in accordance with that chapter.

(12) All floors and walkways shall be maintained in good condition. Loose or broken components shall be repaired or replaced. Secure footing shall be ensured on all floors and walkways.

[Statutory Authority: RCW 49.17.040 and 49.17.050. 86-03-074 (Order 86-14), § 296-155-020, filed 1/21/86; Order 74-26, § 296-155-020, filed 5/7/74, effective 6/6/74.]

WAC 296-155-030 Acceptable certifications.

(1) Pressure vessels. Current and valid certification by an insurance company or regulatory authority shall be deemed as acceptable evidence of safe installation, inspection, testing of pressure vessels provided by the employer.

(2) Boilers. Boilers provided by the employer shall be deemed to be in compliance with the requirements of this section when evidence of current and valid certification by an insurance company or regulatory authority attesting to the safe installation, inspection, and testing is presented.

(3) Other requirements. Regulations prescribing specific requirements for other types of pressure vessels and similar equipment are contained in Parts D and M of this chapter.

[Order 74-26, § 296-155-030, filed 5/7/74, effective 6/6/74.]

WAC 296-155-035 General requirements.

(1) The use of any machinery, tool, material, or equipment which is not in compliance with any applicable requirements of this chapter is prohibited. Such machine, tool, material, or equipment shall either be identified as unsafe by tagging or locking the controls to render them inoperable or shall be physically removed from its place of operation.

(2) The employer shall permit only those employees qualified by training or experience to operate equipment and machinery.

(3) Employees shall use safeguards provided for their protection.

(4) Suitable clothing shall be worn for the job. Sufficient and proper clothing shall be worn to assist in preventing scratches, abrasions, slivers, sunburn, hot liquid burns, or similar hazards. Loose or ragged clothing, scarfs or ties shall not be worn while working around moving machinery.

(5) Where work is in progress above workers, a catch platform or other means shall be provided to protect those working below. All workers shall be notified. One completed floor shall be maintained between workers and steel or concrete work above.

(6) Employees shall report to their employers the existence of any unsafe equipment or method or any other hazard which, to their knowledge is unsafe and where such unsafe equipment or method or other hazard exists in violation of this chapter it shall be corrected.

(7) Nothing herein contained shall prevent the use of existing equipment during its lifetime provided it shall be properly safeguarded, maintained in good condition, be in conformity with applicable safety and health standards, and shall conform to safety factors for the material used, as herein provided.

(8) As construction progresses, the component parts of structures shall be secured or braced to prevent collapse or failure.

(9) Prompt and safe removal of injured employees from elevated work locations, trenches and excavations shall be ensured prior to commencement of work.

[Statutory Authority: RCW 49.17.040 and 49.17.050. 86-03-074 (Order 86-14), § 296-155-035, filed 1/21/86; Order 74-26, § 296-155-035, filed 5/7/74, effective 6/6/74.]

WAC 296-155-040 Safe place standards.

WISHA Regional Directive 80-15A

(1) Each employer shall furnish to each employee a place of employment free from recognized hazards that are causing or likely to cause serious injury or death to employees.

(2) Every employer shall require safety devices, furnish safeguards, and shall adopt and use practices, methods, operations, and processes which are reasonably adequate to render such employment and place of employment safe. Every employer shall do everything reasonably necessary to protect the life and safety of employees.

(3) No employer shall require any employee to go or be in any employment or place of employment which is hazardous to the employee.

WAC 296-155-040 (Cont.)

(4) No employer shall fail or neglect:

(a) To provide and use safety devices and safeguards.

(b) To adopt and use methods and processes reasonably adequate to render the employment and place of employment safe.

(c) To do everything reasonably necessary to protect the life and safety of employees.

(5) No employer, owner, or lessee of any real property shall construct or cause to be constructed any place of employment that is hazardous to the employee.

(6) No person shall do any of the following:

(a) Remove, displace, damage, destroy or carry off any safety device, safeguard, notice, or warning, furnished for use in any employment or place of employment.

(b) Interfere in any way with the use thereof by any other person.

(c) Interfere with the use of any method or process adopted for the protection of any employee, including themselves, in such employment, or place of employment.

(d) Fail or neglect to do everything reasonably necessary to protect the life and safety of employees.

(7) The use of intoxicants or debilitating drugs while on duty is prohibited. Employees under the influence of intoxicants or drugs shall not be permitted in or around worksites. This subsection (7) shall not apply to employees taking prescription drugs or narcotics as directed and prescribed by a physician, provided such use does not endanger the employee or others.

[Statutory Authority: Chapter 49.17 RCW. 94-15-096 (Order 94-07), § 296-155-040, filed 7/20/94, effective 9/20/94; Order 74-26, § 296-155-040, filed 5/7/74, effective 6/6/74.]

PART B-1
OCCUPATIONAL HEALTH AND ENVIRONMENTAL CONTROL

WAC 296-155-100 Management's responsibility.

(1) It shall be the responsibility of management to establish, supervise, and enforce, in a manner which is effective in practice:

(a) A safe and healthful working environment.

(b) An accident prevention program as required by these standards.

(c) Training programs to improve the skill and competency of all employees in the field of occupational safety and health.

(2) Employees required to handle or use poisons, caustics, and other harmful substances shall be instructed regarding the safe handling and use, and be made aware of the potential hazards, personal hygiene, and personal protective measures required.

(3) In job site areas where harmful plants or animals are present, employees who may be exposed shall be instructed regarding the potential hazards, and how to avoid injury, and the first aid procedures to be used in the event of injury.

(4) Employees required to handle or use flammable liquids, gases, or toxic materials shall be instructed in the safe handling and use of these materials and made aware of the specific requirements contained in Parts B, D, and other applicable parts of this standard.

(5) Permit-required confined spaces. The requirements of chapters 296-24, 296-62 and 296-155 WAC apply.

(6) The employer shall ensure that work assignments place no employee in a position or location not within ordinary calling distance of another employee able to render assistance in case of emergency.

Note: This subsection does not apply to operators of motor vehicles, watchpersons or other jobs which, by their nature, are single employee assignments. However, a definite procedure for checking the welfare of all employees during working hours should be instituted and all employees so advised.

(7) Each employer shall post and keep posted a notice or notices (Job Safety and Health Protection - Form F416-081-000) to be furnished by the department of labor and industries, informing employees of the protections and obligations provided for in the act and that for assistance and information, including copies of the act, and of specific safety and health standards employees should contact the employer or the nearest office of the department of labor and industries. Such notice or notices shall be posted by the employer at each establishment in a conspicuous place or places where notices to employees are customarily posted. Each employer shall take steps to assure that such notices are not altered, defaced, or covered by other material.

[Statutory Authority: Chapter 49.17 RCW. 95-04-007, § 296-155-100, filed 1/18/95, effective 3/1/95; 94-15-096 (Order 94-07), § 296-155-100, filed 7/20/94, effective 9/20/94; 91-24-017 (Order 91-07),§ 296-155-100, filed 11/22/91, effective 12/24/91. Statutory Authority: RCW 49.17.040 and 49.17.050. 86-03-074 (Order 86-14), § 296-155-100, filed 1/21/86; Order 76-6, § 296-155-100, filed 3/1/76; Order 74-26, § 296-155-100, filed 5/7/74, effective 6/6/74.]

WAC 296-155-105 Employee's responsibility.

(1) Employees shall coordinate and cooperate with all other employees in an attempt to eliminate accidents.

(2) Employees shall study and observe all safety standards governing their work.

WAC 296-155-105 (Cont.)

(3) Employees shall apply the principles of accident prevention in their daily work and shall use proper safety devices and protective equipment as required by their employment or employer.

(4) Employees shall properly care for all personal protective equipment.

(5) Employees shall make a report, on the day of the incident, to their immediate supervisor, of each industrial injury or occupational illness, regardless of the degree of severity.

[Order 74-26, § 296-155-105, filed 5/7/74, effective 6/6/74.]

WAC 296-155-110 Accident prevention program.

(1) Exemptions. Workers of employers whose primary business is other than construction, who are engaged solely in maintenance and repair work, including painting and decorating, are exempt from the requirement of this section provided:

(a) The maintenance and repair work, including painting and decorating, is being performed on the employer's premises, or facility.

(b) The length of the project does not exceed one week.

(c) The employer is in compliance with the requirements of WAC 296-800-140 Accident prevention program, and WAC 296-800-130, Safety committees and safety meetings.

(2) Each employer shall develop a formal accident-prevention program, tailored to the needs of the particular plant or operation and to the type of hazard involved. The department may be contacted for assistance in developing appropriate programs.

(3) The following are the minimal program elements for all employers:

A safety orientation program describing the employer's safety program and including:

(a) How, where, and when to report injuries, including instruction as to the location of first-aid facilities.

(b) How to report unsafe conditions and practices.

(c) The use and care of required personal protective equipment.

(d) The proper actions to take in event of emergencies including the routes of exiting from areas during emergencies.

(e) Identification of the hazardous gases, chemicals, or materials involved along with the instructions on the safe use and emergency action following accidental exposure.

(f) A description of the employer's total safety program.

(g) An on-the-job review of the practices necessary to perform the initial job assignments in a safe manner.

(4) Each accident-prevention program shall be outlined in written format.

(5) Every employer shall conduct crew leader-crew safety meetings as follows:

WAC 296-155-110 (Cont.)

(a) Crew Leader-crew safety meetings shall be held at the beginning of each job, and at least weekly thereafter.

(b) Crew Leader-crew meetings tailored to the particular operation.

(6) Crew leader-crew safety meetings shall address the following:

(a) A review of any walk-around safety inspection conducted since the last safety meeting.

(b) A review of any citation to assist in correction of hazards.

(c) An evaluation of any accident investigations conducted since the last meeting to determine if the cause of the unsafe acts or unsafe conditions involved were properly identified and corrected.

(d) Attendance shall be documented.

(e) Subjects discussed shall be documented.

Note: Subcontractors and their employees may, with the permission of the general contractor, elect to fulfill the requirements of subsection (5)(a) and (b) of this section by attending the prime contractors crew leader-crew safety meeting. Any of the requirements of subsections (6)(a), (b), (c), and (7) of this section not satisfied by the prime contractors safety meetings shall be the responsibility of the individual employers.

(7) Minutes of each crew leader-crew meeting shall be prepared and a copy shall be maintained at the location where the majority of the employees of each construction site report for work each day.

(8) Minutes of crew leader-crew safety meetings shall be retained by the employer for at least one year and shall be made available for review by personnel of the department, upon request.

(9) Every employer shall conduct walk-around safety inspections as follows:

(a) At the beginning of each job, and at least weekly thereafter, a walk-around safety inspection shall be conducted jointly by one member of management and one employee, elected by the employees, as their authorized representative.

(b) The employer shall document walk-around safety inspections and such documentation shall be available for inspection by personnel of the department.

(c) Records of walk-around inspections shall be maintained by the employer until the completion of the job.

[Statutory Authority: RCW 49.17.010, .040, .050. 01-11-038 (Order 99-36), § 296-155-110, filed 05/09/01, effective 09/01/01. Statutory Authority: RCW 49.17.010, .040, .050. 00-08-078 (Order 99-15), § 296-155-110, filed 04/04/00, effective 07/01/00. Statutory Authority: Chapter 49.17 RCW. 94-15-096 (Order 94-07), § 296-155-110, filed 7/20/94, effective 9/20/94; 92-09-148 (Order 92-01), § 296-155-110, filed 4/22/92, effective 5/25/92. Statutory Authority: RCW 49.17.040 and 49.17.050. 86-03-074 (Order 86-14), § 296-155-110, filed 1/21/86; Order 74-26, § 296-155-110, filed 5/7/74, effective 6/6/74.]

WAC 296-155-115 Safety bulletin board. There shall be installed and maintained in every fixed establishment (the place where employees regularly report to work) employing eight or more persons, a safety bulletin board sufficient in size to display and post safety bulletins, newsletters, posters, accident statistics and other safety educational material.

[Order 74-26, § 296-155-115, filed 5/7/74, effective 6/6/74.]

WAC 296-155-120 First-aid training and certification. This section is designed to assure that all employees in this state are afforded quick and effective first-aid attention in the event of an on the job injury. To achieve this purpose the presence of personnel trained in first-aid procedures at or near those places where employees are

WAC 296-155-120 (Cont.)

working is required. Compliance with the provisions of this section may require the presence of more than one first-aid trained person.

(1) The first-aid training requirements of the safety and health core rules, chapter 296-800 WAC, apply within the scope of chapter 296-155 WAC.

(2) Each employer must have available at all worksites, where a crew is present, a person or persons holding a valid first-aid certificate.

(3) All crew leaders, supervisors or persons in direct charge of one or more employees must have a valid first-aid certificate.

(4) For the purposes of this section, a crew means a group of two or more employees working at any worksite.

Note: The requirement that all crew leaders, supervisors or person in direct charge of one or more employees (subsection (3) of this section) applies even if other first-aid trained person(s) are available. In emergencies, crew leaders will be permitted to work up to thirty days without having the required certificate, providing an employee in the crew or another crew leaders in the immediate work area has the necessary certificate.

[Statutory Authority: RCW 49.17.010, .040, .050. 01-11-038 (Order 99-36), § 296-155-120, filed 05/09/01, effective 09/01/01. Statutory Authority: RCW 49.17.010, .040, .050. 00-01-038 (Order 99-08), § 296-155-120, filed 12/07/99, effective 02/01/2000. Statutory Authority: Chapter 49.17 RCW. 94-15-096 (Order 94-07), § 296-155-120, filed 7/20/94, effective 9/20/94. Statutory Authority: RCW 49.17.040 and 49.17.050. 86-03-074 (Order 86-14), § 296-155-120, filed 1/21/86; Order 74-26, § 296-155-120, filed 5/7/74, effective 6/6/74.]

WAC 296-155-125 First-aid supplies.

(1) The first-aid kits and supplies requirements of the safety and health core rules, chapter 296-800 WAC, apply within the scope of chapter 296-155 WAC.

(2) All vehicles used to transport work crews must be equipped with first-aid supplies.

(3) When practical, a poster must be fastened and maintained either on or in the cover of each first-aid kit and at or near all phones plainly stating the worksite address or location, and the phone numbers of emergency medical responders for the worksite.

(4) Requirements of WAC 296-62-130, Emergency washing facilities, apply within the scope of chapter 296-155 WAC.

[Statutory Authority: RCW 49.17.010, .040, .050. 01-11-038 (Order 99-36), § 296-155-125, filed 05/09/01, effective 09/01/01. Statutory Authority: RCW 49.17.010, .040, .050. 00-01-038 (Order 99-08), § 296-155-125, filed 12/07/99, effective 02/01/2000. Statutory Authority: Chapter 49.17 RCW. 94-15-096 (Order 94-07), § 296-155-125, filed 7/20/94, effective 9/20/94. Statutory Authority: RCW 49.17.040 and 49.17.050. 86-03-074 (Order 86-14), § 296-155-125, filed 1/21/86; Order 74-26, § 296-155-125, filed 5/7/74, effective 6/6/74.]

WAC 296-155-130 First-aid station. Employers with fifty or more employees per shift at one location must establish a first-aid station in accordance with the requirements in chapter 296-800 WAC.

[Statutory Authority: RCW 49.17.010, .040, .050. 01-11-038 (Order 99-36), § 296-155-130, filed 05/09/01, effective 09/01/01. Statutory Authority: RCW 49.17.010, .040, .050. 00-01-038 (Order 99-08), § 296-155-130, filed 12/07/99, effective 02/01/2000. Statutory Authority: RCW 49.17.040 and 49.17.050. 86-03-074 (Order 86-14), § 296-155-130, filed 1/21/86; Order 74-26, § 296-155-130, filed 5/7/74, effective 6/6/74.]

WAC 296-155-140 Sanitation.

(1) Potable water.

(a) An adequate supply of potable water shall be provided in all places of employment.

(b) Portable containers used to dispense drinking water shall be capable of being tightly closed and equipped with a tap. Water shall not be dipped from containers.

WAC 296-155-140 (Cont.)

(c) Any container used to distribute drinking water shall be clearly marked as to the nature of its contents and not used for any other purpose.

(d) The common drinking cup is prohibited.

(e) Where single service cups (to be used but once) are supplied, both a sanitary container for the unused cups and a receptacle for disposing of the used cups shall be provided.

(f) All water containers used to furnish drinking water shall be thoroughly cleaned at least once each week or more often as conditions require.

(g) The requirements of this subsection do not apply to mobile crews or to normally unattended work locations as long as employees working at these locations have transportation immediately available, within the normal course of their duties, to nearby facilities otherwise meeting the requirements of this section.

(h) The following definitions apply:

(i) **Mobile crew**: A work crew that routinely moves to a different work location periodically. Normally a mobile crew is not at the same location all day.

(ii) **Normally unattended work location:** An unattended site that is visited occasionally by one or more employees.

(iii) **Nearby facility:** A sanitary facility that is within three minutes travel by the transportation provided.

(iv) **"Potable water"** means water which meets the quality standards for drinking purposes of state or local authority having jurisdiction or water that meets the quality standards prescribed by the United States Environmental Protection Agency's National Interim Primary Drinking Water Regulations, published in 40 CFR Part 141, and 40 CFR 147.2400.

(2) Wash water.

(a) Clean, tepid wash water, between 70 and 100 degrees Fahrenheit, shall be provided at all construction sites.

(b) Individual hand towels shall be provided. Both a sanitary container for the unused towels and a receptacle for disposal of used towels shall be provided.

(c) Hand soap, industrial hand cleaner or similar cleansing agents shall be provided. Cleansing agents shall be adequate to remove any paints, coatings, herbicides, insecticides or other contaminants.

(d) The requirements of this subsection do not apply to mobile crews or to normally unattended work locations as long as employees working at these locations have transportation immediately available, within the normal course of their duties, to nearby facilities otherwise meeting the requirements of this section.

(e) Gasoline or solvents shall not be used for personal cleaning.

WAC 296-155-140 (Cont.)

(f) Wash water areas will be maintained in a dry condition. Slipping or other hazards shall be eliminated from the wash water area before it is acceptable for use.

(3) Nonpotable water.

(a) Outlets for nonpotable water, such as water for industrial or fire fighting purposes only, shall be identified by signs meeting the requirements of Part E of this chapter, to indicate clearly that the water is unsafe and is not to be used for drinking, washing or cooking purposes.

(b) There shall be no cross-connection, open or potential, between a system furnishing potable water, a system furnishing nonpotable water or a system furnishing wash water.

(4) Toilets.

(a) The provisions of this section apply to both portable chemical toilets and to flush toilets, except where flush toilets are used the requirements of WAC 296-800-230 shall apply instead of (b) of this subsection.

(b) Accessible toilets shall be provided for employees according to the following table:

TABLE B-1

Number of Employees	Toilets Required
1-10	1
1-25	2
26-40	3
41-60	4
61-80	5
Over 80	one additional toilet for each additional twenty employees or any fraction thereof.

(c) When the employer provides both flush and portable chemical toilets, the number of employees allowed to be served by the flush toilets, per WAC 296-800-230 will be calculated. That number will be subtracted from the total number of employees and the employer will be required to provide an adequate number of portable chemical toilets for the number of remaining employees, as required by (b) of this subsection.

(d) Toilets shall be maintained in clean, sanitary and functional condition. Internal latches shall be provided to secure the units from inadvertent entry. Where there are twenty or more employees consisting of both sexes, facilities shall be provided for each sex.

(i) Each unit shall be properly cleaned on a routine basis.

(ii) Chemicals, toilet tissue and sanitary seat covers shall be maintained in a supply sufficient for use during the entire shift.

(iii) Any defective or inadequate unit shall be immediately removed from service.

WAC 296-155-140 (Cont.)

(e) Specifications. The following specifications apply:

(i) A noncaustic chemical toilet (portable chemical toilet is) a self-contained unit equipped with a waste receiving chemical holding container.

(ii) Portable chemical toilets consisting of only a holding tank, commonly referred to as "elevator units" or "elevator toilets" are not acceptable. "Elevator units" may be used if they are individually located in a lockable room which affords privacy. When this type unit is used in a private individual lockable room the entire room will be considered a toilet facility, as such the room will meet all requirements of toilet facilities and be inspected in accordance with subsection (5)(b)(iii) of this section.

(iii) Rooms, buildings or shelters housing toilets shall be of sound construction, easy to clean, provide shelter and provide privacy. The toilet rooms shall be ventilated to the outside and adequately lighted. All openings into the toilet room shall be covered with 16-mesh screen.

(iv) Toilets shall be serviced on a regular schedule. Servicing shall include the use of a disinfectant for cleaning urinals and seats, removing waste from containers, recharging containers with an odor controlling chemical and installing an adequate supply of toilet tissue and seat covers.

(v) Service shall be performed in accordance with local codes by approved servicing organizations. Waste shall be disposed of or discharged in accordance with requirements of local health department regulations.

(vi) Waste containers shall be fabricated from impervious materials, e.g. plastic, steel, fiberglass or their equivalent. Containers shall be water tight and capable of containing the chemical waste in a sanitary manner. The container shall be fitted to the building in a manner so as to prevent insects from entering from the exterior of the building. Containers shall be adequate in size to be used by the number of persons, according to the schedule for minimum requirements, without filling the container to more than half of its volume before regularly scheduled servicing.

(vii) Removal of waste shall be handled in a clean and sanitary manner by means of a vacuum hose and received by a leak-proof tank truck. All valves on the tank shall be leak-proof.

(viii) Provisions shall be made so service trucks have a clear approach and convenient access to the toilets to be serviced.

(ix) Disposal of waste from tank trucks shall be in accordance with local health department requirements. In the absence of provisions by local health departments, waste must be disposed of through municipal or district sanitary sewage systems. Municipal or area sanitary sewage districts shall provide sewage disposal locations and facilities which are adequate and convenient for duly authorized toilet service organizations.

(f) The requirements of this subsection do not apply to mobile crews or to normally unattended work locations as long as employees working at these locations have transportation immediately available, within the normal course of their duties, to nearby facilities otherwise meeting the requirements of this section.

WAC 296-155-140 (Cont.)

(5)(a) On multi-employer worksites, the prime contractor shall ensure that the requirements of this section are met. Each employer is responsible for seeing that facilities for their own employees are provided.

(b) Each employer shall ensure, at the beginning of each shift, that the sanitation facilities required by this section are inspected. If any facility or unit fails to meet the following requirements, immediate corrective action shall be taken. Such action shall be documented and maintained at the site for at least 72 hours. Inspection shall establish:

(i) Potable water: Sufficient supply of water, sufficient supply of cups, container integrity, cleanliness of unit and area, capacity of trash receptacle (empty).

(ii) Wash water: Sufficient supply of clean water, proper temperature, sufficient supply of towels, sufficient supply of cleansing agents, container integrity, cleanliness of unit and area without the presence of physical hazards, capacity of trash receptacle (empty).

(iii) Toilets: Sufficient supply of toilet tissue and sanitary seat covers, capacity and condition of chemical agent, capacity and condition of holding tank, cleanliness of unit and area without the presence of physical hazards, physical and structural condition of unit, condition of lock, condition of toilet seat and tissue holder, absence of all foreign debris.

(c) The location of the facilities required by subsections (1), (2) and (4) of this section shall be as close as practical to the highest concentration of employees.

(i) On multistory structures they shall be furnished on every third floor.

(ii) At all sites they shall be located within 200 feet horizontally of all employees.

(iii) The requirements of subsection (5)(c)(i) and (ii) do not apply to mobile crews or to normally unattended work locations as long as employees working at these locations have transportation immediately available, within the normal course of their duties, to nearby facilities otherwise meeting the requirements of this section.

(6) Food handling. All employees' food service facilities and operations shall meet the applicable laws, ordinances and regulations of the jurisdictions in which they are located.

(7) Temporary sleeping quarters. When temporary sleeping quarters are provided, they shall be heated, ventilated and lighted.

[Statutory Authority: RCW 49.17.010, .040, .050. 01-11-038 (Order 99-36), § 296-155-140, filed 05/09/01, effective 09/01/01. Statutory Authority: Chapter 49.17 RCW. 94-15-096 (Order 94-07), § 296-155-140, filed 7/20/94, effective 9/20/94; 89-11-035 (Order 89-03), § 296-155-140, filed 5/15/89, effective 6/30/89. Statutory Authority: RCW 49.17.040 and 49.17.050. 86-03-074 (Order 86-14), § 296-155-140, filed 1/21/86; Order 74-26, § 296-155-140, filed 5/7/74, effective 6/6/74.]

WAC 296-155-145 Occupational noise exposure. The occupational noise exposure requirements of the general occupational health standards, chapter 296-62 WAC, shall apply.

[Statutory Authority: RCW 49.17.040 and 49.17.050. 85-01-022 (Order 84-24), § 296-155-145, filed 12/11/84; 83-15-017 (Order 83-19), § 296-155-145, filed 7/13/83, effective 9/12/83; Order 76-29, § 296-155-145, filed 9/30/76; Order 74-26, § 296-155-145, filed 5/7/74, effective 6/6/74.]

WAC 296-155-150 Ionizing radiation.

(1) In construction and related activities involving the use of sources of ionizing radiation, the pertinent provisions of the Nuclear Regulatory Commission's Standards for Protection Against Radiation, relating to protection against occupational radiation exposure, shall apply.

WAC 296-155-150 (Cont.)

(2) Any activity which involves the use of radioactive material or x-ray, whether or not under license from the Nuclear Regulatory Commission, shall be performed by competent persons specially trained in the proper and safe operation of such equipment. In the case of materials used under commission license, only persons actually licensed, or competent persons under direction and supervision of the licensee shall perform such work.

[Statutory Authority: Chapter 49.17 RCW. 94-15-096 (Order 94-07), § 296-155-150, filed 7/20/94, effective 9/20/94; Order 74-26, § 296-155-150, filed 5/7/74, effective 6/6/74.]

WAC 296-155-155 Nonionizing radiation.

(1) Only qualified and trained employees shall be assigned to install, adjust, and operate laser equipment.

(2) Proof of qualification of the laser equipment operator shall be available and in possession of operator at all times.

(3) Employees, when working in areas in which a potentially hazardous exposure (see WAC 296-62-09005(4)) to direct or reflected laser radiation exists, shall be provided with antilaser eye protection devices specified in Part C of this chapter.

(4) Areas in which Class II and III lasers are used shall be posted with standard laser warning placards.

(5) Beam shutters or caps shall be utilized, or the laser turned off, when laser transmission is not actually required. When the laser is left unattended for a substantial period of time, such as during lunch hour, overnight, or at change of shifts, the laser shall be turned off.

(6) Only mechanical or electronic means shall be used as a detector for guiding the internal alignment of the laser.

(7) The laser beam shall not be directed at employees.

(8) When it is raining or snowing, or when there is dust or fog in the air, and it is impracticable to cease laser system operation, employees shall be kept out of range of the area of source and target during such weather conditions.

(9) Laser equipment shall bear a conspicuously displayed label to indicate hazard classification. This label shall be prepared in accordance with 21 CFR 1040.10.

(10) Only Class I, II, or III laser equipment shall be used. Class IV laser equipment shall not be used.

(11) Laser unit in operation shall be set up above the heads of the employees, when possible.

(12) Employees shall not be exposed to radiofrequency/microwave radiation in excess of the permissible exposure limits specified in WAC 296-62-09005.

[Statutory Authority: RCW 49.17.040 and 49.17.050. 86-03-074 (Order 86-14), § 296-155-155, filed 1/21/86; 85-01-022 (Order 84-24), § 296-155-155, filed 12/11/84; Order 74-26, § 296-155-155, filed 5/7/74, effective 6/6/74.]

WAC 296-155-160 Gases, vapors, fumes, dusts, and mists.

(1) Exposure of employees to inhalation, ingestion, skin absorption, or contact with any material or substance at a concentration above those specified in the general occupational health standards, WAC 296-62-07515 shall be avoided.

WAC 296-155-160 (Cont.)

(2) To achieve compliance with subsection (1) of this section, administrative or engineering controls must first be implemented whenever feasible. When such controls are not feasible to achieve full compliance, protective equipment or other protective measures shall be used to keep the exposure of employees to air contaminants within the limits prescribed in WAC 296-62-07515. Any equipment and technical measures used for this purpose must first be approved for each particular use by a competent industrial hygienist or other technically qualified person. Whenever respirators are used, their use shall comply with WAC 296-155-220.

(3) Whenever internal combustion equipment exhausts in enclosed spaces, tests shall be made and recorded to ensure that employees are not exposed to unsafe concentrations of toxic gases or oxygen deficient atmospheres. See chapter 296-62 WAC, the general occupational health standards.

(4) Whenever any employee is exposed to asbestos, the provisions of the general occupational health standards, chapter 296-62 WAC shall apply.

(5) Subsections (1) and (2) of this section do not apply to the exposure of employees to formaldehyde. Whenever any employee is exposed to formaldehyde, the requirements of WAC 296-62-07540 shall apply.

[Statutory Authority: Chapter 49.17 RCW. 94-15-096 (Order 94-07), § 296-155-160, filed 7/20/94, effective 9/20/94; 88-14-108 (Order 88-11), § 296-155-160, filed 7/6/88; 87-24-051 (Order 87-24), § 296-155-160, filed 11/30/87. Statutory Authority: RCW 49.17.050(2) and 49.17.040. 87-10-008 (Order 87-06), § 296-155-160, filed 4/27/87. Statutory Authority: RCW 49.17.040 and 49.17.050. 86-03-074 (Order 86-14), § 296-155-160, filed 1/21/86. Statutory Authority: RCW 49.17.040 and 49.17.050. 83-24-013 (Order 83-34), § 296-155-160, filed 11/30/83; Order 74-26, § 296-155-160, filed 5/7/74, effective 6/6/74.]

WAC 296-155-165 Lighting and illumination.

(1) Lighting which is adjusted to provide a margin of safety in production and inspection tasks shall be provided and maintained. The minimum level of task lighting in all indoor work places shall be an average of ten foot-candles measured thirty inches above the floor. MSHA approved cap lights are acceptable for use in tunnel headings.

(2) Whenever general lighting of an entire area is not provided, illumination sufficient to provide visibility of potentially hazardous objects and emergency control equipment shall be supplied. The minimum level of nontask lighting in all indoor work places shall be an average of three foot-candles measured thirty inches above the floor.

(3) Diffusion and distribution of artificial and natural light. Artificial light sources shall be installed with regard to mounting height, spacing and reflectors or other suitable accessories so as to secure a reasonably uniform distribution of illumination and to avoid glare and sharply defined shadows which could temporarily reduce a person's ability to see clearly.

Note: This section establishes minimal levels of illumination for safety purposes only. Guidelines pertaining to optimal levels of lighting and illumination may be found in Practice for Industrial Lighting ANSI/IES RP7-1979.

(4) The minimum levels specified in subsections (1) and (2) of this section represent averages with the lowest level in an area to be no less than fifty percent of the indicated value.

[Statutory Authority: RCW 49.17.040 and 49.17.050. 86-03-074 (Order 86-14), § 296-155-165, filed 1/21/86; Order 74-26, § 296-155-165, filed 5/7/74, effective 6/6/74.]

WAC 296-155-170 Ventilation.

(1) General. Whenever hazardous substances such as dusts, fumes, mists, vapors, or gases exist or are produced in the course of construction work, their concentrations shall not exceed the limits specified in WAC 296-155-160(1). When ventilation is used as an engineering control method, the system shall be installed and operated according to the requirements of this section.

(2) Local exhaust ventilation. Local exhaust ventilation when used as described in (1) shall be designed to prevent dispersion into the air of dusts, fumes, mists, vapors, and gases in concentrations causing harmful exposure. Such exhaust systems shall be so designed that dusts, fumes, mists, vapors, or gases are not drawn through the work area of employees.

(3) Design and operation. Exhaust fans, jets, ducts, hoods, separators, and all necessary appurtenances, including refuse receptacles, shall be so designed, constructed, maintained and operated as to ensure the required protection by maintaining a volume and velocity of exhaust air sufficient to gather dusts, fumes, vapors, or gases from said equipment or process, and to convey them to suitable points of safe disposal, thereby preventing their dispersion in harmful quantities into the atmosphere where employees work.

(4) Duration of operations.

(a) The exhaust system shall be in operation continually during all operations which it is designed to serve. If the employee remains in the contaminated zone, the system shall continue to operate after the cessation of said operations, the length of time to depend upon the individual circumstances and effectiveness of the general ventilation system.

(b) Since dust capable of causing disability is, according to the best medical opinion, of microscopic size, tending to remain for hours in suspension in still air, it is essential that the exhaust system be continued in operation for a time after the work process or equipment served by the same shall have ceased, in order to ensure the removal of the harmful elements to the required extent.

Note: For the same reason, employees wearing respiratory equipment should not remove same immediately until a clear atmosphere has been established.

(5) Disposal of exhaust materials. The air outlet from every dust separator, and the dusts, fumes, mists, vapors, or gases collected by an exhaust or ventilating system shall discharge to the outside atmosphere. Collecting systems which return air to work area may be used if concentrations which accumulate in the work area air do not result in harmful exposure to employees. Dust and refuse discharged from an exhaust system shall be disposed of in such a manner that it will not result in harmful exposure to employees.

[Order 74-26, § 296-155-170, filed 5/7/74, effective 6/6/74.]

WAC 296-155-173 Methylenedianiline.

[Statutory Authority: Chapter 49.17 RCW. 93-04-111 (Order 92-15), § 296-155-173, filed 2/3/93, effective 3/15/93.]

WAC 296-155-17301 Scope and application.

(1) This section applies to all construction work as defined in WAC 296-155-005, in which there is exposure to MDA, including but not limited to the following:

(a) Construction, alteration, repair, maintenance, or renovation of structures, substrates, or portions thereof, that contain MDA;

(b) Installation or the finishing of surfaces with products containing MDA;

WAC 296-155-17301 (Cont.)

(c) MDA spill/emergency cleanup at construction sites; and

(d) Transportation, disposal, storage, or containment of MDA or products containing MDA on the site or location at which construction activities are performed.

(2) Except as provided in subsection (7) of this section and WAC 296-155-17311(5), this standard does not apply to the processing, use, and handling of products containing MDA where initial monitoring indicates that the product is not capable of releasing MDA in excess of the action level under the expected conditions of processing, use, and handling which will cause the greatest possible release; and where no "dermal exposure to MDA" can occur.

(3) Except as provided in subsection (7) of this section, this standard does not apply to the processing, use, and handling of products containing MDA where objective data are reasonably relied upon which demonstrate the product is not capable of releasing MDA under the expected conditions of processing, use, and handling which will cause the greatest possible release; and where no "dermal exposure to MDA" can occur.

(4) Except as provided in subsection (7) of this section, this standard does not apply to the storage, transportation, distribution, or sale of MDA in intact containers sealed in such a manner as to contain the MDA dusts, vapors, or liquids, except for the provisions of WAC 296-62-054 and 296-155-17309.

(5) Except as provided in subsection (7) of this section, this standard does not apply to materials in any form which contain less than 0.1% MDA by weight or volume.

(6) Except as provided in subsection (7) of this section, this standard does not apply to "finished articles containing MDA."

(7) Where products containing MDA are exempted under subsections (2) and (6) of this section, the employer shall maintain records of the initial monitoring results or objective data supporting that exemption and the basis for the employer's reliance on the data, as provided in the recordkeeping provision of WAC 296-155-17331.

[Statutory Authority: Chapter 49.17 RCW. 93-04-111 (Order 92-15), § 296-155-17301, filed 2/3/93, effective 3/15/93.]

WAC 296-155-17303 Definitions. For the purpose of this standard, the following definitions shall apply:

(1) **"Action level"** means a concentration of airborne MDA of 5 ppb as an 8-hour time-weighted average.

(2) **"Authorized person"** means any person specifically authorized by the employer whose duties require the person to enter a regulated area, or any person entering such an area as a designated representative of employees for the purpose of exercising the right to observe monitoring and measuring procedures under WAC 296-155-17333, or any other person authorized by the act or regulations issued under the act.

(3) **"Container"** means any barrel, bottle, can, cylinder, drum, reaction vessel, storage tank, commercial packaging, or the like, but does not include piping systems.

(4) **"Decontamination area"** means an area outside of, but as near as practical to, the regulated area, consisting of an equipment storage area, wash area, and clean change area, which is used for the decontamination of workers, materials, and equipment contaminated with MDA.

(5) **"Dermal exposure to MDA"** occurs where employees are engaged in the handling, application, or use of mixtures or materials containing MDA, with any of the following nonairborne forms of MDA:

WAC 296-155-17303 (Cont.)

(a) Liquid, powdered, granular, or flaked mixtures containing MDA in concentrations greater than 0.1% by weight or volume; and

(b) Materials other than "finished articles" containing MDA in concentrations greater than 0.1% by weight or volume.

(6) **"Director"** means the director of the department of labor and industries.

(7) **"Emergency"** means any occurrence such as, but not limited to, equipment failure, rupture of containers, or failure of control equipment which results in an unexpected and potentially hazardous release of MDA.

(8) **"Employee exposure"** means exposure to MDA which would occur if the employee were not using respirators or protective work clothing and equipment.

(9) **"Finished article containing MDA"** is defined as a manufactured item:

(a) Which is formed to a specific shape or design during manufacture;

(b) Which has end use function(s) dependent in whole or part upon its shape or design during end use; and

(c) Where applicable, is an item which is fully cured by virtue of having been subjected to the conditions (temperature, time) necessary to complete the desired chemical reaction.

(10) **"Historical monitoring data"** means monitoring data for construction jobs that meet the following conditions:

(a) The data upon which judgments are based are scientifically sound and were collected using methods that are sufficiently accurate and precise;

(b) The processes and work practices that were in use when the historical monitoring data were obtained are essentially the same as those to be used during the job for which initial monitoring will not be performed;

(c) The characteristics of the MDA-containing material being handled when the historical monitoring data were obtained are the same as those on the job for which initial monitoring will not be performed;

(d) Environmental conditions prevailing when the historical monitoring data were obtained are the same as those on the job for which initial monitoring will not be performed; and

(e) Other data relevant to the operations, materials, processing, or employee exposures covered by the exception are substantially similar. The data must be scientifically sound, the characteristics of the MDA containing material must be similar, and the environmental conditions comparable.

(11) **"4,4' methylenedianiline" or "MDA"** means the chemical 4,4'-diaminodiphenylmethane, Chemical Abstract Service Registry Number 101-77-9, in the form of a vapor, liquid, or solid. The definition also includes the salts of MDA.

(12) **"Regulated areas"** means areas where airborne concentrations of MDA exceed or can reasonably be expected to exceed, the permissible exposure limits, or where "dermal exposure to MDA" can occur.

WAC 296-155-17303 (Cont.)

(13) **"STEL"** means short-term exposure limit as determined by any 15-minute sample period.
[Statutory Authority: Chapter 49.17 RCW. 93-04-111 (Order 92-15), § 296-155-17303, filed 2/3/93, effective 3/15/93.]

WAC 296-155-17305 Permissible exposure limits. The employer shall assure that no employee is exposed to an airborne concentration of MDA in excess of ten parts per billion (10 ppb) as an 8-hour time-weighted average and a STEL of one hundred parts per billion (100 ppb).
[Statutory Authority: Chapter 49.17 RCW. 93-04-111 (Order 92-15), § 296-155-17305, filed 2/3/93, effective 3/15/93.]

WAC 296-155-17307 Communication among employers. On multi-employer worksites, an employer performing work involving the application of MDA or materials containing MDA for which establishment of one or more regulated areas is required shall inform other employers on the site of the nature of the employer's work with MDA and of the existence of, and requirements pertaining to, regulated areas.
[Statutory Authority: Chapter 49.17 RCW. 93-04-111 (Order 92-15), § 296-155-17307, filed 2/3/93, effective 3/15/93.]

WAC 296-155-17309 Emergency situations.

(1) Written plan.

(a) A written plan for emergency situations shall be developed for each construction operation where there is a possibility of an emergency. The plan shall include procedures where the employer identifies emergency escape routes for her or his employees at each construction site before the construction operation begins. Appropriate portions of the plan shall be implemented in the event of an emergency.

(b) The plan shall specifically provide that employees engaged in correcting emergency conditions shall be equipped with the appropriate personal protective equipment and clothing as required in WAC 296-155-17317 and 296-155-17319 until the emergency is abated.

(c) The plan shall specifically include provisions for alerting and evacuating affected employees as well as the applicable elements prescribed in WAC 296-24-567, "Employee emergency plans and fire prevention plans."

(2) Alerting employees. Where there is the possibility of employee exposure to MDA due to an emergency, means shall be developed to promptly alert employees who have the potential to be directly exposed. Affected employees not engaged in correcting emergency conditions shall be evacuated immediately in the event that an emergency occurs. Means shall also be developed for alerting other employees who may be exposed as a result of the emergency.
[Statutory Authority: Chapter 49.17 RCW. 93-04-111 (Order 92-15), § 296-155-17309, filed 2/3/93, effective 3/15/93.]

WAC 296-155-17311 Exposure monitoring.

(1) General.

(a) Determinations of employee exposure shall be made from breathing zone air samples that are representative of each employee's exposure to airborne MDA over an 8-hour period. Determination of employee exposure to the STEL shall be made from breathing zone air samples collected over a 15 minute sampling period.

WAC 296-155-17311 (Cont.)

(b) Representative employee exposure shall be determined on the basis of one or more samples representing full shift exposure for each shift for each job classification in each work area where exposure to MDA may occur.

(c) Where the employer can document that exposure levels are equivalent for similar operations in different work shifts, the employer shall only be required to determine representative employee exposure for that operation during one shift.

(2) Initial monitoring. Each employer who has a workplace or work operation covered by this standard shall perform initial monitoring to determine accurately the airborne concentrations of MDA to which employees may be exposed unless:

(a) The employer can demonstrate, on the basis of objective data, that the MDA-containing product or material being handled cannot cause exposures above the standard's action level, even under worst-case release conditions; or

(b) The employer has historical monitoring or other data demonstrating that exposures on a particular job will be below the action level.

(3) Periodic monitoring and monitoring frequency.

(a) If the monitoring required by subsection (2)(b) of this section reveals employee exposure at or above the action level, but at or below the PELs, the employer shall repeat such monitoring for each such employee at least every 6 months.

(b) If the monitoring required by subsection (2)(b) of this section reveals employee exposure above the PELs, the employer shall repeat such monitoring for each such employee at least every 3 months.

(c) Employers who are conducting MDA operations within a regulated area can forego periodic monitoring if the employees are all wearing supplied-air respirators while working in the regulated area.

(d) The employer may alter the monitoring schedule from every three months to every six months for any employee for whom two consecutive measurements taken at least 7 days apart indicate that the employee exposure has decreased to below the PELs but above the action level.

(4) Termination of monitoring.

(a) If the initial monitoring required by subsection (2)(b) of this section reveals employee exposure to be below the action level, the employer may discontinue the monitoring for that employee, except as otherwise required by subsection (5) of this section.

(b) If the periodic monitoring required by subsection (3) of this section reveals that employee exposures, as indicated by at least two consecutive measurements taken at least 7 days apart, are below the action level the employer may discontinue the monitoring for that employee, except as otherwise required by subsection (5) of this section.

(5) Additional monitoring. The employer shall institute the exposure monitoring required under subsections (2)(b) and (c) of this section when there has been a change in production process, chemicals present, control equipment, personnel, or work practices which may result in new or additional exposures to MDA, or when the employer has any reason to suspect a change which may result in new or additional exposures.

WAC 296-155-17311 (Cont.)

(6) Accuracy of monitoring. Monitoring shall be accurate, to a confidence level of 95 percent, to within plus or minus 25 percent for airborne concentrations of MDA.

(7) Employee notification of monitoring results.

(a) The employer shall, within 15 working days after the receipt of the results of any monitoring performed under this standard, notify each employee of these results, in writing, either individually or by posting of results in an appropriate location that is accessible to affected employees.

(b) The written notification required by subdivision (a) of this subsection shall contain the corrective action being taken by the employer or any other protective measures which have been implemented to reduce the employee exposure to or below the PELs, wherever the PELs are exceeded.

(8) Visual monitoring. The employer shall make routine inspections of employee hands, face, and forearms potentially exposed to MDA. Other potential dermal exposures reported by the employee must be referred to the appropriate medical personnel for observation. If the employer determines that the employee has been exposed to MDA the employer shall:

(a) Determine the source of exposure;

(b) Implement protective measures to correct the hazard; and

(c) Maintain records of the corrective actions in accordance with WAC 296-155-17327.

[Statutory Authority: Chapter 49.17 RCW. 93-04-111 (Order 92-15), § 296-155-17311, filed 2/3/93, effective 3/15/93.]

WAC 296-155-17313 Regulated areas.

(1) Establishment.

(a) Airborne exposures. The employer shall establish regulated areas where airborne concentrations of MDA exceed, or can reasonably be expected to exceed, the permissible exposure limits.

(b) Dermal exposures. Where employees are subject to “dermal exposure to MDA” the employer shall establish those work areas as regulated areas.

(2) Demarcation. Regulated areas shall be demarcated from the rest of the workplace in a manner that minimizes the number of persons potentially exposed.

(3) Access. Access to regulated areas shall be limited to authorized persons.

(4) Personal protective equipment and clothing. Each person entering a regulated area shall be supplied with, and required to use, the appropriate personal protective clothing and equipment in accordance with WAC 296-155-17317 and 296-155-17319.

(5) Prohibited activities. The employer shall ensure that employees do not eat, drink, smoke, chew tobacco or gum, or apply cosmetics in regulated areas.

[Statutory Authority: Chapter 49.17 RCW. 93-04-111 (Order 92-15), § 296-155-17313, filed 2/3/93, effective 3/15/93.]

WAC 296-155-17315 Methods of compliance.

(1) Engineering controls and work practices and respirators.

(a) The employer shall use one or any combination of the following control methods to achieve compliance with the permissible exposure limits prescribed by WAC 296-155-17317.

(i) Local exhaust ventilation equipped with HEPA filter dust collection systems;

(ii) General ventilation systems;

(iii) Use of work practices; or

(iv) Other engineering controls such as isolation and enclosure that the director can show to be feasible.

(b) Wherever the feasible engineering controls and work practices which can be instituted are not sufficient to reduce employee exposure to or below the PELs, the employer shall use them to reduce employee exposure to the lowest levels achievable by these controls and shall supplement them by the use of respiratory protective devices which comply with the requirements of WAC 296-155-17317.

(2) Special provisions. For workers engaged in spray application methods, respiratory protection must be used in addition to feasible engineering controls and work practices to reduce employee exposure to or below the PELs.

(3) Prohibitions. Compressed air shall not be used to remove MDA unless the compressed air is used in conjunction with an enclosed ventilation system designed to capture the dust cloud created by the compressed air.

(4) Employee rotation. The employer shall not use employee rotation as a means of compliance with the exposure limits prescribed in WAC 296-155-17305.

(5) Compliance program.

(a) The employer shall establish and implement a written program to reduce employee exposure to or below the PELs by means of engineering and work practice controls, as required by subsection (1) of this section, and by use of respiratory protection where permitted under this section.

(b) Upon request this written program shall be furnished for examination and copying to the director, affected employees, and designated employee representatives. The employer shall review and, as necessary, update such plans at least once every 12 months to make certain they reflect the current status of the program.

[Statutory Authority: Chapter 49.17 RCW. 93-04-111 (Order 92-15), § 296-155-17315, filed 2/3/93, effective 3/15/93.]

WAC 296-155-17317 Respiratory protection.

(1) General. For employees who use respirators required by this section, the employer must provide respirators that comply with the requirements of this section. Respirators must be used during:

(a) Periods necessary to install or implement feasible engineering and work-practice controls.

(b) Work operations, such as maintenance and repair activities and spray application processes, for which engineering and work-practice controls are not feasible.

WAC 296-155-17317 (Cont.)

(c) Work operations for which feasible engineering and work-practice controls are not yet sufficient to reduce employee exposure to or below the PELs.

(d) Emergencies.

(2) Respirator program. The employer must implement a respiratory protection program as required by chapter 296-62 WAC, Part E (except WAC 296-62-07130(1) and 296-62-07150 through WAC 296-62-07156).

(3) Respirator selection.

(a) The employer must select the appropriate respirator from Table I of this section.

Table I.--Respiratory Protection for MDA

Airborne concentration of MDA or condition of use	Respirator type
a. Less than or equal to 10xPEL	(1) Half-mask respirator with HEPA[1]cartridge.[2]
b. Less than or equal to 50xPEL	(1) Full facepiece respirator with HEPA[1] cartridge or canister.[2]
c. Less than or equal to 1000xPEL	(1) Full facepiece powered air-purifying respirator with HEPA[1] cartridges.[2]
d. Greater than 1000xPEL or unknown	(1) Self-contained breathing concentration apparatus with full facepiece in positive pressure mode; (2) Full facepiece positive-pressure demand supplied-air respirator with auxiliary self-contained air supply.
e. Escape	(1) Any full facepiece air-purifying respirator with HEPA[1] cartridges;[2] (2) Any positive pressure or continuous flow self-contained breathing apparatus with full facepiece or hood.
f. Fire fighting	(1) Full facepiece self-contained breathing apparatus in positive pressure mode.

Note: Respirators assigned for higher environmental concentrations may be used at lower concentrations.

[1]**High efficiency particulate in air filter (HEPA)** means a filter that is at least 99.97 percent efficient against mono-dispersed particles of 0.3 micrometers or larger.
[2]Combination HEPA/organic vapor cartridges shall be used whenever MDA in liquid form or a process requiring heat is used.

(b) An employee who cannot use a negative-pressure respirator must be given the option of using a positive-pressure respirator, or a supplied-air respirator operated in the continuous-flow or pressure-demand mode.

[Statutory Authority: RCW 49.17.010, .040, .050. 99-10 (Order 98-10), § 296-155-17317, filed 05/04/99, effective 09/01/99.
Statutory Authority: Chapter 49.17 RCW. 93-04-111 (Order 92-15), § 296-155-17317, filed 2/3/93, effective 3/15/93.]

WAC 296-155-17319 Protective work clothing and equipment.

(1) Provision and use. Where employees are subject to dermal exposure to MDA, where liquids containing MDA can be splashed into the eyes, or where airborne concentrations of MDA are in excess of the PEL, the employer shall provide, at no cost to the employee, and ensure that the employee uses, appropriate protective work clothing and equipment which prevent contact with MDA such as, but not limited to:

(a) Aprons, coveralls, or other full-body work clothing;

(b) Gloves, head coverings, and foot coverings; and

(c) Face shields, chemical goggles; or

(d) Other appropriate protective equipment which comply with WAC 296-24-078.

(2) Removal and storage.

(a) The employer shall ensure that, at the end of their work shift, employees remove MDA-contaminated protective work clothing and equipment that is not routinely removed throughout the day in change areas provided in accordance with the provisions in WAC 296-155-17321.

(b) The employer shall ensure that, during their work shift, employees remove all other MDA-contaminated protective work clothing or equipment before leaving a regulated area.

(c) The employer shall ensure that no employee takes MDA-contaminated work clothing or equipment out of the decontamination areas, except those employees authorized to do so for the purpose of laundering, maintenance, or disposal.

(d) MDA-contaminated work clothing or equipment shall be placed and stored and transported in sealed, impermeable bags, or other closed impermeable containers.

(e) Containers of MDA-contaminated protective work clothing or equipment which are to be taken out of decontamination areas or the workplace for cleaning, maintenance, or disposal, shall bear labels warning of the hazards of MDA.

(3) Cleaning and replacement.

(a) The employer shall provide the employee with clean protective clothing and equipment. The employer shall ensure that protective work clothing or equipment required by this section is cleaned, laundered, repaired, or replaced at intervals appropriate to maintain its effectiveness.

(b) The employer shall prohibit the removal of MDA from protective work clothing or equipment by blowing, shaking, or any methods which allow MDA to reenter the workplace.

(c) The employer shall ensure that laundering of MDA-contaminated clothing shall be done so as to prevent the release of MDA in the workplace.

(d) Any employer who gives MDA-contaminated clothing to another person for laundering shall inform such person of the requirement to prevent the release of MDA.

(e) The employer shall inform any person who launders or cleans protective clothing or equipment contaminated with MDA of the potentially harmful effects of exposure.

WAC 296-155-17319 (Cont.)

(4) Visual examination.

(a) The employer shall ensure that employees' work clothing is examined periodically for rips or tears that may occur during performance of work.

(b) When rips or tears are detected, the protective equipment or clothing shall be repaired and replaced immediately.

[Statutory Authority: Chapter 49.17 RCW. 93-04-111 (Order 92-15), § 296-155-17319, filed 2/3/93, effective 3/15/93.]

WAC 296-155-17321 Hygiene facilities and practices.

(1) General.

(a) The employer shall provide decontamination areas for employees required to work in regulated areas or required by WAC 296-155-17319 to wear protective clothing. Exception: In lieu of the decontamination area requirement specified in this subsection, the employer may permit employees engaged in small scale, short duration operations, to clean their protective clothing or dispose of the protective clothing before such employees leave the area where the work was performed.

(b) Change areas. The employer shall ensure that change areas are equipped with separate storage facilities for protective clothing and street clothing, in accordance with WAC 296-24-12011.

(c) Equipment area. The equipment area shall be supplied with impermeable, labeled bags and containers for the containment and disposal of contaminated protective clothing and equipment.

(2) Shower area.

(a) Where feasible, shower facilities shall be provided which comply with WAC 296-24-12010 wherever the possibility of employee exposure to airborne levels of MDA in excess of the permissible exposure limit exists.

(b) Where dermal exposure to MDA occurs, the employer shall ensure that materials spilled or deposited on the skin are removed as soon as possible by methods which do not facilitate the dermal absorption of MDA.

(3) Lunch areas.

(a) Whenever food or beverages are consumed at the worksite and employees are exposed to MDA the employer shall provide clean lunch areas were MDA levels are below the action level and where no dermal exposure to MDA can occur.

(b) The employer shall ensure that employees wash their hands and faces with soap and water prior to eating, drinking, smoking, or applying cosmetics.

(c) The employer shall ensure that employees do not enter lunch facilities with contaminated protective work clothing or equipment.

[Statutory Authority: RCW 49.17.010, .040, .050. 01-11-038 (Order 99-36), § 296-155-17321, filed 05/09/01, effective 09/01/01.
Statutory Authority: Chapter 49.17 RCW. 93-04-111 (Order 92-15), § 296-155-17321, filed 2/3/93, effective 3/15/93.]

WAC 296-155-17323 Communication of hazards to employees.

(1) Signs and labels.

(a) The employer shall post and maintain legible signs demarcating regulated areas and entrances or accessways to regulated areas that bear the following legend:

DANGER
MDA
MAY CAUSE CANCER LIVER TOXIN
AUTHORIZED PERSONNEL ONLY
RESPIRATORS AND PROTECTIVE CLOTHING
MAY BE REQUIRED TO BE WORN IN THIS AREA

(b) The employer shall ensure that labels or other appropriate forms of warning are provided for containers of MDA within the workplace. The labels shall comply with the requirements of WAC 296-800-170 and shall include one of the following legends:

(i) For pure MDA

DANGER
CONTAINS MDA
MAY CAUSE CANCER LIVER TOXIN

(ii) For mixtures containing MDA

DANGER
CONTAINS MDA
CONTAINS MATERIALS WHICH MAY CAUSE CANCER LIVER TOXIN

(2) Material safety data sheets (MSDS). Employers shall obtain or develop, and shall provide access to their employees to, a material safety data sheet (MSDS) for MDA.

(3) Information and training.

(a) The employer shall provide employees with information and training on MDA, in accordance with WAC 296-800-170, at the time of initial assignment and at least annually thereafter.

(b) In addition to the information required under WAC 296-800-170, the employer shall:

(i) Provide an explanation of the contents of this section, including Appendices A and B of this section, and indicate to employees where a copy of the standard is available;

(ii) Describe the medical surveillance program required under WAC 296-155-17327, and explain the information contained in Appendix C of this standard; and

(iii) Describe the medical removal provision required under WAC 296-155-17327.

(4) Access to training materials.

(a) The employer shall make readily available to all affected employees, without cost, all written materials relating to the employee training program, including a copy of this regulation.

WAC 296-155-17323 (Cont.)

(b) The employer shall provide to the director, upon request, all information and training materials relating to the employee information and training program.

[Statutory Authority: RCW 49.17.010, .040, .050. 01-11-038 (Order 99-36), § 296-155-17323, filed 05/09/01, effective 09/01/01. Statutory Authority: Chapter 49.17 RCW. 93-04-111 (Order 92-15), § 296-155-17323, filed 2/3/93, effective 3/15/93.]

WAC 296-155-17325 Housekeeping.

(1) All surfaces shall be maintained as free as practicable of visible accumulations of MDA.

(2) The employer shall institute a program for detecting MDA leaks, spills, and discharges, including regular visual inspections of operations involving liquid or solid MDA.

(3) All leaks shall be repaired and liquid or dust spills cleaned up promptly.

(4) Surfaces contaminated with MDA may not be cleaned by the use of compressed air.

(5) Shoveling, dry sweeping, and other methods of dry clean-up of MDA may be used where HEPA-filtered vacuuming and/or wet cleaning are not feasible or practical.

(6) Waste, scrap, debris, bags, containers, equipment, and clothing contaminated with MDA shall be collected and disposed of in a manner to prevent the reentry of MDA into the workplace.

[Statutory Authority: Chapter 49.17 RCW. 93-04-111 (Order 92-15), § 296-155-17325, filed 2/3/93, effective 3/15/93.]

WAC 296-155-17327 Medical surveillance.

(1) General.

(a) The employer shall make available a medical surveillance program for employees exposed to MDA under the following circumstances:

(i) Employees exposed at or above the action level for 30 or more days per year;

(ii) Employees who are subject to dermal exposure to MDA for 15 or more days per year;

(iii) Employees who have been exposed in an emergency situation;

(iv) Employees whom the employer, based on results from compliance with WAC 296-155-17311(8) has reason to believe are being dermally exposed; and

(v) Employees who show signs or symptoms of MDA exposure.

(b) The employer shall ensure that all medical examinations and procedures are performed by or under the supervision of a licensed physician at a reasonable time and place, and provided without cost to the employee.

(2) Initial examinations.

(a) Within 150 days of the effective date of this standard, or before the time of initial assignment, the employer shall provide each employee covered by subsection (1)(a) of this section with a medical examination including the following elements:

WAC 296-155-17327 (Cont.)

A detailed history which includes:

(i) Past work exposure to MDA or any other toxic substances;

(ii) A history of drugs, alcohol, tobacco, and medication routinely taken (duration and quantity); and

(iii) A history of dermatitis, chemical skin sensitization, or previous hepatic disease.

(iv) A physical examination which includes all routine physical examination parameters, skin examination, and examination for signs of liver disease.

(v) Laboratory tests including:

(A) Liver function tests; and

(B) Urinalysis.

(vi) Additional tests as necessary in the opinion of the physician.

(b) No initial medical examination is required if adequate records show that the employee has been examined in accordance with the requirements of this section within the previous six months prior to the effective date of this standard or prior to the date of initial assignment.

(3) Periodic examinations.

(a) The employer shall provide each employee covered by this section with a medical examination at least annually following the initial examination. These periodic examinations shall include at least the following elements:

(i) A brief history regarding any new exposure to potential liver toxins, changes in drug, tobacco, and alcohol intake, and the appearance of physical signs relating to the liver and the skin;

(ii) The appropriate tests and examinations including liver function tests and skin examinations; and

(iii) Appropriate additional tests or examinations as deemed necessary by the physician.

(b) If in the physician's opinion the results of liver function tests indicate an abnormality, the employee shall be removed from further MDA exposure in accordance with WAC 296-155-17329. Repeat liver function tests shall be conducted on advice of the physician.

(4) Emergency examinations. If the employer determines that the employee has been exposed to a potentially hazardous amount of MDA in an emergency situation under WAC 296-155-17309, the employer shall provide medical examinations in accordance with subsection (3)(a) and (b). If the results of liver function testing indicate an abnormality, the employee shall be removed in accordance with WAC 296-155-17329. Repeat liver function tests shall be conducted on the advice of the physician. If the results of the tests are normal, tests must be repeated two to three weeks from the initial testing. If the results of the second set of tests are normal and on the advice of the physician, no additional testing is required.

WAC 296-155-17327 (Cont.)

(5) Additional examinations. Where the employee develops signs and symptoms associated with exposure to MDA, the employer shall provide the employee with an additional medical examination including liver function tests. Repeat liver function tests shall be conducted on the advice of the physician. If the results of the tests are normal, tests must be repeated two to three weeks from the initial testing. If the results of the second set of tests are normal and on the advice of the physician, no additional testing is required.

(6) Multiple physician review mechanism.

(a) If the employer selects the initial physician who conducts any medical examination or consultation provided to an employee under this section, and the employee has signs or symptoms of occupational exposure to MDA (which could include an abnormal liver function test), and the employee disagrees with the opinion of the examining physician, and this opinion could affect the employee's job status, the employee may designate an appropriate and mutually acceptable second physician:

(i) To review any findings, determinations, or recommendations of the initial physician; and

(ii) To conduct such examinations, consultations, and laboratory tests as the second physician deems necessary to facilitate this review.

(b) The employer shall promptly notify an employee of the right to seek a second medical opinion after each occasion that an initial physician conducts a medical examination or consultation pursuant to this section. The employer may condition its participation in, and payment for, the multiple physician review mechanism upon the employee doing the following within 15 days after receipt of the foregoing notification, or receipt of the initial physician's written opinion, whichever is later:

(i) The employee informing the employer that he or she intends to seek a second medical opinion; and

(ii) The employee initiating steps to make an appointment with a second physician.

(c) If the findings, determinations, or recommendations of the second physician differ from those of the initial physician, then the employer and the employee shall assure that efforts are made for the two physicians to resolve any disagreement.

(d) If the two physicians have been unable to quickly resolve their disagreement, then the employer and the employee through their respective physicians shall designate a third physician:

(i) To review any findings, determinations, or recommendations of the prior physicians; and

(ii) To conduct such examinations, consultations, laboratory tests, and discussions with the prior physicians as the third physician deems necessary to resolve the disagreement of the prior physicians.

(e) The employer shall act consistent with the findings, determinations, and recommendations of the second physician, unless the employer and the employee reach a mutually acceptable agreement.

(f) Information provided to the examining physician.

(i) The employer shall provide the following information to the examining physician:

WAC 296-155-17327 (Cont.)

(A) A copy of this regulation and its appendices;

(B) A description of the affected employee's duties as they relate to the employee's potential exposure to MDA;

(C) The employee's current actual or representative MDA exposure level;

(D) A description of any personal protective equipment used or to be used; and

(E) Information from previous employment related medical examinations of the affected employee.

(ii) The employer shall provide the foregoing information to a second physician under this section upon request either by the second physician, or by the employee.

(g) Physician's written opinion.

(i) For each examination under this section, the employer shall obtain, and provide the employee with a copy of, the examining physician's written opinion within 15 days of its receipt. The written opinion shall include the following:

(A) The occupationally pertinent results of the medical examination and tests;

(B) The physician's opinion concerning whether the employee has any detected medical conditions which would place the employee at increased risk of material impairment of health from exposure to MDA;

(C) The physician's recommended limitations upon the employee's exposure to MDA or upon the employee's use of protective clothing or equipment and respirators; and

(D) A statement that the employee has been informed by the physician of the results of the medical examination and any medical conditions resulting from MDA exposure which require further explanation or treatment.

(ii) The written opinion obtained by the employer shall not reveal specific findings or diagnoses unrelated to occupational exposures.

[Statutory Authority: Chapter 49.17 RCW. 93-04-111 (Order 92-15), § 296-155-17327, filed 2/3/93, effective 3/15/93.]

WAC 296-155-17329 Medical removal.

(1) Temporary medical removal of an employee.

(a) Temporary removal resulting from occupational exposure. The employee shall be removed from work environments in which exposure to MDA is at or above the action level or where dermal exposure to MDA may occur, following an initial examination (WAC 296-155-17327(2)), periodic examinations (WAC 296-155-17327(3)), an emergency situation (WAC 296-155-17327(4)), or an additional examination (WAC 296-155-17327(5)) in the following circumstances:

(i) When the employee exhibits signs and/or symptoms indicative of acute exposure to MDA; or

WAC 296-155-17329 (Cont.)

(ii) When the examining physician determines that an employee's abnormal liver function tests are not associated with MDA exposure but that the abnormalities may be exacerbated as a result of occupational exposure to MDA.

(b) Temporary removal due to a final medical determination.

(i) The employer shall remove an employee from work having an exposure to MDA at or above the action level or where the potential for dermal exposure exists on each occasion that a final medical determination results in a medical finding, determination, or opinion that the employee has a detected medical condition which places the employee at increased risk of material impairment to health from exposure to MDA.

(ii) For the purposes of this section, the phrase “final medical determination” shall mean the outcome of the physician review mechanism used pursuant to the medical surveillance provisions of this section.

(iii) Where a final medical determination results in any recommended special protective measures for an employee, or limitations on an employee's exposure to MDA, the employer shall implement and act consistent with the recommendation.

(2) Return of the employee to former job status.

(a) The employer shall return an employee to her or his former job status:

(i) When the employee no longer shows signs or symptoms of exposure to MDA, or upon the advice of the physician.

(ii) When a subsequent final medical determination results in a medical finding, determination, or opinion that the employee no longer has a detected medical condition which places the employee at increased risk of material impairment to health from exposure to MDA.

(b) For the purposes of this section, the requirement that an employer return an employee to his or her former job status is not intended to expand upon or restrict any rights an employee has or would have had, absent temporary medical removal, to a specific job classification or position under the terms of a collective bargaining agreement.

(3) Removal of other employee special protective measure or limitations. The employer shall remove any limitations placed on an employee or end any special protective measures provided to an employee pursuant to a final medical determination when a subsequent final medical determination indicates that the limitations or special protective measures are no longer necessary.

(4) Employer options pending a final medical determination. Where the physician review mechanism used pursuant to the medical surveillance provisions of this section has not yet resulted in a final medical determination with respect to an employee, the employer shall act as follows:

(a) Removal. The employer may remove the employee from exposure to MDA, provide special protective measures to the employee, or place limitations upon the employee, consistent with the medical findings, determinations, or recommendations of the physician who has reviewed the employee's health status.

WAC 296-155-17329 (Cont.)

(b) Return. The employer may return the employee to her or his former job status, and end any special protective measures provided to the employee, consistent with the medical findings, determinations, or recommendations of any of the physicians who have reviewed the employee's health status, with two exceptions:

(i) If the initial removal, special protection, or limitation of the employee resulted from a final medical determination which differed from the findings, determinations, or recommendations of the initial physician; or

(ii) The employee has been on removal status for the preceding six months as a result of exposure to MDA, then the employer shall await a final medical determination.

(5) Medical removal protection benefits.

(a) Provisions of medical removal protection benefits. The employer shall provide to an employee up to six months of medical removal protection benefits on each occasion that an employee is removed from exposure to MDA or otherwise limited pursuant to this section.

(b) Definition of medical removal protection benefits. For the purposes of this section, the requirement that an employer provide medical removal protection benefits means that the employer shall maintain the earnings, seniority, and other employment rights and benefits of an employee as though the employee had not been removed from normal exposure to MDA or otherwise limited.

(c) Follow-up medical surveillance during the period of employee removal or limitations. During the period of time that an employee is removed from normal exposure to MDA or otherwise limited, the employer may condition the provision of medical removal protection benefits upon the employee's participation in follow-up medical surveillance made available pursuant to this section.

(d) Workers' compensation claims. If a removed employee files a claim for workers' compensation payments for an MDA-related disability, then the employer shall continue to provide medical removal protection benefits pending disposition of the claim. To the extent that an award is made to the employee for earnings lost during the period of removal, the employer's medical removal protection obligation shall be reduced by such amount. The employer shall receive no credit for workers' compensation payments received by the employee for treatment-related expenses.

(e) Other credits. The employer's obligation to provide medical removal protection benefits to a removed employee shall be reduced to the extent that the employee receives compensation for earnings lost during the period of removal either from a publicly or employer-funded compensation program, or receives income from employment with any employer made possible by virtue of the employee's removal.

(f) Employees who do not recover within the 6 months of removal. The employer shall take the following measures with respect to any employee removed from exposure to MDA:

(i) The employer shall make available to the employee a medical examination pursuant to this section to obtain a final medical determination with respect to the employee;

(ii) The employer shall assure that the final medical determination obtained indicates whether or not the employee may be returned to her or his former job status, and, if not, what steps should be taken to protect the employee's health;

WAC 296-155-17329 (Cont.)

(iii) Where the final medical determination has not yet been obtained, or once obtained indicates that the employee may not yet be returned to her or his former job status, the employer shall continue to provide medical removal protection benefits to the employee until either the employee is returned to former job status, or a final medical determination is made that the employee is incapable of ever safely returning to her or his former job status; and

(iv) Where the employer acts pursuant to a final medical determination which permits the return of the employee to her or his former job status despite what would otherwise be an unacceptable liver function test, later questions concerning removing the employee again shall be decided by a final medical determination. The employer need not automatically remove such an employee pursuant to the MDA removal criteria provided by this section.

(6) Voluntary removal or restriction of an employee. Where an employer, although not required by this section to do so, removes an employee from exposure to MDA or otherwise places limitations on an employee due to the effects of MDA exposure on the employee's medical condition, the employer shall provide medical removal protection benefits to the employee equal to that required by subsection (5) of this section.

[Statutory Authority: Chapter 49.17 RCW. 93-04-111 (Order 92-15), § 296-155-17329, filed 2/3/93, effective 3/15/93.]

WAC 296-155-17331 Recordkeeping.

(1) Objective data for exempted operations.

(a) Where the employer has relied on objective data that demonstrate that products made from or containing MDA are not capable of releasing MDA or do not present a dermal exposure problem under the expected conditions of processing, use, or handling to exempt such operations from the initial monitoring requirements under WAC 296-155-17311(2), the employer shall establish and maintain an accurate record of objective data reasonably relied upon in support of the exemption.

(b) The record shall include at least the following information:

(i) The product qualifying for exemption;

(ii) The source of the objective data;

(iii) The testing protocol, results of testing, and/or analysis of the material for the release of MDA;

(iv) A description of the operation exempted and how the data support the exemption; and

(v) Other data relevant to the operations, materials, processing, or employee exposures covered by the exemption.

(c) The employer shall maintain this record for the duration of the employer's reliance upon such objective data.

(2) Historical monitoring data.

(a) Where the employer has relied on historical monitoring data that demonstrate that exposures on a particular job will be below the action level to exempt such operations from the initial monitoring

WAC 296-155-17331 (Cont.)

requirements under WAC 296-155-17311(2), the employer shall establish and maintain an accurate record of historical monitoring data reasonably relied upon in support of the exception.

(b) The record shall include information that reflect the following conditions:

(i) The data upon which judgments are based are scientifically sound and were collected using methods that are sufficiently accurate and precise;

(ii) The processes and work practices that were in use when the historical monitoring data were obtained are essentially the same as those to be used during the job for which initial monitoring will not be performed;

(iii) The characteristics of the MDA-containing material being handled when the historical monitoring data were obtained are the same as those on the job for which initial monitoring will not be performed;

(iv) Environmental conditions prevailing when the historical monitoring data were obtained are the same as those on the job for which initial monitoring will not be performed; and

(v) Other data relevant to the operations, materials, processing, or employee exposures covered by the exception.

(c) The employer shall maintain this record for the duration of the employer's reliance upon such historical monitoring data.

(3) The employer may utilize the services of competent organizations such as industry trade associations and employee associations to maintain the records required by this section.

(4) Exposure measurements.

(a) The employer shall keep an accurate record of all measurements taken to monitor employee exposure to MDA.

(b) This record shall include at least the following information:

(i) The date of measurement;

(ii) The operation involving exposure to MDA;

(iii) Sampling and analytical methods used and evidence of their accuracy;

(iv) Number, duration, and results of samples taken;

(v) Type of protective devices worn, if any; and

(vi) Name, Social Security number, and exposure of the employees whose exposures are represented.

(c) The employer shall maintain this record for at least thirty years in accordance with chapter 296-62 WAC, Part B.

WAC 296-155-17331 (Cont.)

(5) Medical surveillance.

(a) The employer shall establish and maintain an accurate record for each employee subject to medical surveillance by WAC 296-155-17327 in accordance with chapter 296-62 WAC, Part B.

(b) The record shall include at least the following information:

(i) The name and Social Security number of the employee;

(ii) A copy of the employee's medical examination results, including the medical history, questionnaire responses, results of any tests, and physician's recommendations;

(iii) Physician's written opinions;

(iv) Any employee medical complaints related to exposure to MDA; and

(v) A copy of the information provided to the physician as required by WAC 296-155-17327.

(c) The employer shall ensure that this record is maintained for the duration of employment plus thirty years in accordance with chapter 296-62 WAC, Part B.

(d) A copy of the employee's medical removal and return to work status.

(6) Training records. The employer shall maintain all employee training records for one year beyond the last date of employment.

(7) Availability.

(a) The employer, upon written request, shall make all records required to be maintained by this section available to the assistant secretary and the director for examination and copying.

(b) The employer, upon request, shall make any exposure records required by WAC 296-155-17311 and 296-155-17327 available for examination and copying to affected employees, former employees, designated representatives, and the director, in accordance with WAC 296-62-05201 through 296-62-05209 and 296-62-05213 through 296-62-05223.

(c) The employer, upon request, shall make employee medical records required by WAC 296-155-17327 and this section available for examination and copying to the subject employee, anyone having the specific written consent of the subject employee, and the director in accordance with chapter 296-62 WAC, Part B.

(8) Transfer of records.

(a) The employer shall comply with the requirements concerning transfer of records set forth in WAC 296-62-05215.

(b) Whenever the employer ceases to do business and there is no successor employer to receive and retain the records for the prescribed period, the employer shall notify the director at least 90 days prior to disposal and, upon request, transmit them to the director.

[Statutory Authority: Chapter 49.17 RCW. 93-04-111 (Order 92-15), § 296-155-17331, filed 2/3/93, effective 3/15/93.]

WAC 296-155-17333 Observation of monitoring.

(1) Employee observation. The employer shall provide affected employees, or their designated representatives, an opportunity to observe the measuring or monitoring of employee exposure to MDA conducted pursuant to WAC 296-155-17311.

(2) Observation procedures. When observation of the measuring or monitoring of employee exposure to MDA requires entry into areas where the use of protective clothing and equipment or respirators is required, the employer shall provide the observer with personal protective clothing and equipment or respirators required to be worn by employees working in the area, assure the use of such clothing and equipment or respirators, and require the observer to comply with all other applicable safety and health procedures.

[Statutory Authority: Chapter 49.17 RCW. 93-04-111 (Order 92-15), § 296-155-17333, filed 2/3/93, effective 3/15/93.]

WAC 296-155-17337 Appendices. The information contained in Appendices A, B, C, and D of this standard is not intended by itself, to create any additional obligations not otherwise imposed by this standard nor detract from any existing obligation.

[Statutory Authority: RCW 49.17.010, .040, .050. 99-10 (Order 98-10), § 296-155-17337, filed 05/04/99, effective 09/01/99.
Statutory Authority: Chapter 49.17 RCW. 93-04-111 (Order 92-15), § 296-155-17337, filed 2/3/93, effective 3/15/93.]

WAC 296-155-17339 Startup dates. Compliance with all obligations of this standard commence March 3, 1993, except as follows:

(1) Initial monitoring under WAC 296-155-17311(2) shall be completed as soon as possible but no later than June 3, 1993.

(2) Medical examinations under WAC 296-155-17327, shall be completed as soon as possible but no later than August 14, 1993.

(3) Emergency plans required by WAC 296-155-17309 shall be provided and available for inspection and copying as soon as possible but no later than July 13, 1993.

(4) Initial training and education shall be completed as soon as possible but no later than July 13, 1993.

(5) Decontamination and lunch areas under WAC 296-155-17321 shall be in operation as soon as possible but no later than March 3, 1993.

(6) Respiratory protection required by WAC 296-155-17317 shall be provided as soon as possible but no later than July 13, 1993.

(7) Written compliance plans required by WAC 296-155-17315(5) shall be completed and available for inspection and copying as soon as possible but no later than July 13, 1993.

(8) WISHA shall enforce the permissible exposure limits in WAC 296-155-17305 no earlier than July 13, 1993.

(9) Engineering controls needed to achieve the PELs must be in place March 3, 1993.

(10) Personal protective clothing required by WAC 296-155-17317 shall be available July 13, 1993.

[Statutory Authority: Chapter 49.17 RCW. 93-04-111 (Order 92-15), § 296-155-17339, filed 2/3/93, effective 3/15/93.]

WAC 296-155-17341 Appendix A to WAC 296-155-173--Substance data sheet, for 4-4'-methylenedianiline.

(1) Substance identification.

WAC 296-155-17341 (Cont.)

(a) Substance: Methylenedianiline (MDA).

(b) Permissible exposure:

(i) Airborne: Ten parts per billion parts of air (10 ppb), time-weighted average (TWA) for an 8-hour workday and an action level of five parts per billion parts of air (5 ppb).

(ii) Dermal: Eye contact and skin contact with MDA are not permitted.

(c) Appearance and odor: White to tan solid; amine odor.

(2) Health hazard data.

(a) Ways in which MDA affects your health. MDA can affect your health if you inhale it or if it comes in contact with your skin or eyes. MDA is also harmful if you happen to swallow it. Do not get MDA in eyes, on skin, or on clothing.

(b) Effects of overexposure.

(i) Short-term (acute) overexposure: Overexposure to MDA may produce fever, chills, loss of appetite, vomiting, jaundice. Contact may irritate skin, eyes, and mucous membranes. Sensitization may occur.

(ii) Long-term (chronic) exposure. Repeated or prolonged exposure to MDA, even at relatively low concentrations, may cause cancer. In addition, damage to the liver, kidneys, blood, and spleen may occur with long-term exposure.

(iii) Reporting signs and symptoms: You should inform your employer if you develop any signs or symptoms which you suspect are caused by exposure to MDA including yellow staining of the skin.

(3) Protective clothing and equipment.

(a) Respirators. Respirators are required for those operations in which engineering controls or work practice controls are not adequate or feasible to reduce exposure to the permissible limit. If respirators are worn, they must be certified by the National Institute for Occupational Safety and Health (NIOSH) under 42 CFR part 84, and cartridges or canisters must be replaced as necessary to maintain the effectiveness of the respirator. If you experience difficulty breathing while wearing a respirator, you may request a positive-pressure respirator from your employer. You must be thoroughly trained to use the assigned respirator, and the training will be provided by your employer. MDA does not have a detectable odor except at levels well above the permissible exposure limits. Do not depend on odor to warn you when a respirator canister is exhausted. If you can smell MDA while wearing a respirator, proceed immediately to fresh air. If you experience difficulty breathing while wearing a respirator, tell your employer.

(b) Protective clothing. You may be required to wear coveralls, aprons, gloves, face shields, or other appropriate protective clothing to prevent skin contact with MDA. Where protective clothing is required, your employer is required to provide clean garments to you, as necessary, to assure that the clothing protects you adequately. Replace or repair impervious clothing that has developed leaks. MDA should never be allowed to remain on the skin. Clothing and shoes which are not impervious to MDA should not be allowed to become contaminated with MDA, and if they do,

WAC 296-155-17341 (Cont.)

the clothing and shoes should be promptly removed and decontaminated. The clothing should be laundered to remove MDA or discarded. Once MDA penetrates shoes or other leather articles, they should not be worn again.

(c) Eye protection. You must wear splashproof safety goggles in areas where liquid MDA may contact your eyes. Contact lenses should not be worn in areas where eye contact with MDA can occur. In addition, you must wear a face shield if your face could be splashed with MDA liquid.

(4) Emergency and first aid procedures.

(a) Eye and face exposure. If MDA is splashed into the eyes, wash the eyes for at least 15 minutes. See a doctor as soon as possible.

(b) Skin exposure. If MDA is spilled on your clothing or skin, remove the contaminated clothing and wash the exposed skin with large amounts of soap and water immediately. Wash contaminated clothing before you wear it again.

(c) Breathing. If you or any other person breathes in large amounts of MDA, get the exposed person to fresh air at once. Apply artificial respiration if breathing has stopped. Call for medical assistance or a doctor as soon as possible. Never enter any vessel or confined space where the MDA concentration might be high without proper safety equipment and at least one other person present who will stay outside. A life line should be used.

(d) Swallowing. If MDA has been swallowed and the patient is conscious, do not induce vomiting. Call for medical assistance or a doctor immediately.

(5) Medical requirements. If you are exposed to MDA at a concentration at or above the action level for more than 30 days per year, or exposed to liquid mixtures more than 15 days per year, your employer is required to provide a medical examination, including a medical history and laboratory tests, within 60 days of the effective date of this standard and annually thereafter. These tests shall be provided without cost to you. In addition, if you are accidentally exposed to MDA (either by ingestion, inhalation, or skin/eye contact) under conditions known or suspected to constitute toxic exposure to MDA, your employer is required to make special examinations and tests available to you.

(6) Observation of monitoring. Your employer is required to perform measurements that are representative of your exposure to MDA and you or your designated representative are entitled to observe the monitoring procedure. You are entitled to observe the steps taken in the measurement procedure and to record the results obtained. When the monitoring procedure is taking place in an area where respirators or personal protective clothing and equipment are required to be worn; you and your representative must also be provided with, and must wear, the protective clothing and equipment.

(7) Access to records. You or your representative are entitled to see the records of measurements of your exposure to MDA upon written request to your employer. Your medical examination records can be furnished to your physician or designated representative upon request by you to your employer.

(8) Precautions for safe use, handling, and storage.

(a) Material is combustible. Avoid strong acids and their anhydrides. Avoid strong oxidants. Consult supervisor for disposal requirements.

WAC 296-155-17341 (Cont.)

(b) Emergency clean-up. Wear self-contained breathing apparatus and fully clothe the body in the appropriate personal protective clothing and equipment.

[Statutory Authority: RCW 49.17.010, .040, .050. 99-10 (Order 98-10), § 296-155-17341, filed 05/04/99, effective 09/01/99. Statutory Authority: Chapter 49.17 RCW. 93-04-111 (Order 92-15), § 296-155-17341, filed 2/3/93, effective 3/15/93.]

WAC 296-155-17343 Appendix B to WAC 296-155-173--Substance technical guidelines, MDA.

(1) Identification.

(a) Substance identification.

(i) Synonyms: CAS No. 101-77-9. 4,4'-methylenedianiline; 4,4'-methylenebisaniline; methylenedianiline; dianilinomethane.

(ii) Formula: $C_{13}H_{14}N_2$.

(b) Physical data.

(2) Appearance and odor: White to tan solid; amine odor.

(a) Molecular weight: 198.26.

(b) Boiling point: 398-399 degrees C. at 760 mm Hg.

(c) Melting point: 88-93 degrees C. (190-100 degrees F.).

(d) Vapor pressure: 9 mm Hg at 232 degrees C.

(e) Evaporation rate (n-butyl acetate=1): Negligible.

(f) Vapor density (Air=1): Not applicable.

(g) Volatile fraction by weight: Negligible.

(h) Specific gravity (Water=1): Slight.

(i) Heat of combustion: -8.40 kcal/g.

(j) Solubility in water: Slightly soluble in cold water, very soluble in alcohol, benzene, ether, and many organic solvents.

(3) Fire, explosion, and reactivity hazard data.

(a) Flash point: 190 degrees C. (374 degrees F.) Setaflash closed cup.

(b) Flash point: 226 degrees C. (439 degrees F.) Cleveland open cup.

(c) Extinguishing media: Water spray; dry chemical; carbon dioxide.

(d) Special fire fighting procedures: Wear self-contained breathing apparatus and protective clothing to prevent contact with skin and eyes.

WAC 296-155-17343 (Cont.)

(e) Unusual fire and explosion hazards: Fire or excessive heat may cause production of hazardous decomposition products.

(4) Reactivity data.

(a) Stability: Stable.

(b) Incompatibility: Strong oxidizers.

(c) Hazardous decomposition products: As with any other organic material, combustion may produce carbon monoxide. Oxides of nitrogen may also be present.

(d) Hazardous polymerization: Will not occur.

(5) Spill and leak procedures.

(a) Sweep material onto paper and place in fiber carton.

(b) Package appropriately for safe feed to an incinerator or dissolve in compatible waste solvents prior to incineration.

(c) Dispose of in an approved incinerator equipped with afterburner and scrubber or contract with licensed chemical waste disposal service.

(d) Discharge treatment or disposal may be subject to federal, state, or local laws.

(e) Wear appropriate personal protective equipment.

(6) Special storage and handling precautions.

(a) High exposure to MDA can occur when transferring the substance from one container to another. Such operations should be well ventilated and good work practices must be established to avoid spills.

(b) Pure MDA is a solid with a low vapor pressure. Grinding or heating operations increase the potential for exposure.

(c) Store away from oxidizing materials.

(d) Employers shall advise employees of all areas and operations where exposure to MDA could occur.

(7) Housekeeping and hygiene facilities.

(a) The workplace should be kept clean, orderly, and in a sanitary condition. The employer should institute a leak and spill detection program for operations involving MDA in order to detect sources of fugitive MDA emissions.

(b) Adequate washing facilities with hot and cold water are to be provided and maintained in a sanitary condition. Suitable cleansing agents should also be provided to assure the effective removal of MDA from the skin.

WAC 296-155-17343 (Cont.)

(8) Common operations. Common operations in which exposure to MDA is likely to occur include the following: Manufacture of MDA; manufacture of methylene diisocyanate; curing agent for epoxy resin structures; wire coating operations; and filament winding.

[Statutory Authority: Chapter 49.17 RCW. 93-04-111 (Order 92-15), § 296-155-17343, filed 2/3/93, effective 3/15/93.]

WAC 296-155-17345 Appendix C to WAC 296-155-173--Medical surveillance guidelines for MDA.

(1) Route of entry. Inhalation; skin absorption; ingestion. MDA can be inhaled, absorbed through the skin, or ingested.

(2) Toxicology. MDA is a suspect carcinogen in humans. There are several reports of liver disease in humans and animals resulting from acute exposure to MDA. A well documented case of an acute cardiomyopathy secondary to exposure to MDA is on record. Numerous human cases of hepatitis secondary to MDA are known. Upon direct contact MDA may also cause damage to the eyes. Dermatitis and skin sensitization have been observed. Almost all forms of acute environmental hepatic injury in humans involve the hepatic parenchyma and produce hepatocellular jaundice. This agent produces intrahepatic cholestasis. The clinical picture consists of cholestatic jaundice, preceded or accompanied by abdominal pain, fever, and chills. Onset in about 60% of all observed cases is abrupt with severe abdominal pain. In about 30% of observed cases, the illness presented and evolved more slowly and less dramatically, with only slight abdominal pain. In about 10% of the cases only jaundice was evident. The cholestatic nature of the jaundice is evident in the prominence of itching, the histologic predominance of bile stasis, and portal inflammatory infiltration, accompanied by only slight parenchymal injury in most cases, and by the moderately elevated transaminase values. Acute, high doses, however, have been known to cause hepatocellular damage resulting in elevated SGPT, SGOT, alkaline phosphatase, and bilirubin. Absorption through the skin is rapid. MDA is metabolized and excreted over a 48-hour period. Direct contact may be irritating to the skin, causing dermatitis. Also MDA which is deposited on the skin is not thoroughly removed through washing. MDA may cause bladder cancer in humans. Animal data supporting this assumption is not available nor is conclusive human data. However, human data collected on workers at a helicopter manufacturing facility where MDA is used suggests a higher incidence of bladder cancer among exposed workers.

(3) Signs and symptoms. Skin may become yellow from contact with MDA. Repeated or prolonged contact with MDA may result in recurring dermatitis (red-itchy, cracked skin) and eye irritation. Inhalation, ingestion, or absorption through the skin at high concentrations may result in hepatitis, causing symptoms such as fever and chills, nausea and vomiting, dark urine, anorexia, rash, right upper quadrant pain, and jaundice. Corneal burns may occur when MDA is splashed in the eyes.

(4) Treatment of acute toxic effects/emergency situation. If MDA gets into the eyes, immediately wash eyes with large amounts of water. If MDA is splashed on the skin, immediately wash contaminated skin with mild soap or detergent. Employee should be removed from exposure and given proper medical treatment. Medical tests required under the emergency section of the medical surveillance (WAC 296-155-17327(4)) must be conducted. If the chemical is swallowed do not induce vomiting but remove by gastric lavage.

[Statutory Authority: Chapter 49.17 RCW. 93-04-111 (Order 92-15), § 296-155-17345, filed 2/3/93, effective 3/15/93.]

WAC 296-155-17347 Appendix D to WAC 296-155-173--Sampling and analytical methods for MDA monitoring and measurement procedures. Measurements taken for the purpose of determining employee exposure to MDA are best taken so that the representative average 8-hour exposure may be determined from a single 8-hour sample or two 4-hour samples. Short-time interval samples (or grab samples) may also be used to determine average exposure level if a minimum of five measurements are taken in a random manner over the 8-hour work shift. Random sampling means that any portion of the work shift has the same chance of being sampled as any other. The arithmetic average of all such random samples taken on one work shift is an estimate of an employee's average level of exposure for that work shift. Air samples should be taken in the employee's breathing

WAC 296-155-17347 (Cont.)

zone (air that would most nearly represent that inhaled by the employee). There are a number of methods available for monitoring employee exposures to MDA. The method OSHA currently uses is included below. The employer however has the obligation of selecting any monitoring method which meets the accuracy and precision requirements of the standard under her or his unique field conditions. The standard requires that the method of monitoring must have an accuracy, to a 95 percent confidence level, of not less than plus or minus 25 percent for the select PEL.

WISHA methodology.

Sampling procedure.

Apparatus:

Samples are collected by use of a personal sampling pump that can be calibrated within +/-5% of the recommended flow rate with the sampling filter in line. Samples are collected on 37 mm Gelman type A/E glass fiber filters treated with sulfuric acid. The filters are prepared by soaking each filter with 0.5 mL of 0.26N H_2SO_4. (0.26 N H_2SO_4 can be prepared by diluting 1.5 mL of 36N H_2SO_4 to 200 mL with deionized water.) The filters are dried in an oven at 100 degrees C. for one hour and then assembled into three-piece 37 mm polystyrene cassettes without backup pads. The front filter is separated from the back filter by a polystyrene spacer. The cassettes are sealed with shrink bands and the ends are plugged with plastic plugs. After sampling, the filters are carefully removed from the cassettes and individually transferred to small vials containing approximately 2 mL deionized water. The vials must be tightly sealed. The water can be added before or after the filters are transferred. The vials must be sealable and capable of holding at least 7 mL of liquid. Small glass scintillation vials with caps containing Teflon liners are recommended.

Reagents:

Deionized water is needed for addition to the vials.

Sampling technique:

Immediately before sampling, remove the plastic plugs from the filter cassettes. Attach the cassette to the sampling pump with flexible tubing and place the cassette in the employee's breathing zone. After sampling, seal the cassettes with plastic plugs until the filters are transferred to the vials containing deionized water. At some convenient time within 10 hours of sampling, transfer the sample filters to vials. Seal the small vials lengthwise. Submit at least one blank filter with each sample set. Blanks should be handled in the same manner as samples, but no air is drawn through them. Record sample volumes (in L of air) for each sample, along with any potential interferences.

Retention efficiency:

A retention efficiency study was performed by drawing 100 L of air (80% relative humidity) at 1 L/min through sample filters that had been spiked with 0.814 micro-g MDA. Instead of using backup pads, blank acid-treated filters were used as backups in each cassette. Upon analysis, the top filters were found to have an average of 91.8% of the spiked amount. There was no MDA found on the bottom filters, so the amount lost was probably due to the slight instability of the MDA salt.

Extraction efficiency:

WAC 296-155-17347 (Cont.)

The average extraction efficiency for six filters spiked at the target concentration is 99.6%. The stability of extracted and derivatized samples was verified by reanalyzing the above six samples the next day using fresh standards. The average extraction efficiency for the reanalyzed samples is 98.7%. Recommended air volume and sampling rate. The recommended air volume is 100 L. The recommended sampling rate is 1 L/min.

Interferences (sampling):

MDI appears to be a positive interference. It was found that when MDI was spiked onto an acid-treated filter, the MDI converted to MDA after air was drawn through it. Suspected interferences should be reported to the laboratory with submitted samples.

Safety precautions (sampling):

Attach the sampling equipment to the employees so that it will not interfere with work performance or safety. Follow all safety procedures that apply to the work area being sampled.

Analytical procedure:

Apparatus:

The following are required for analysis. A GC equipped with an electron capture detector. For this evaluation a Hewlett Packard 5880 Gas Chromatograph equipped with a Nickel 63 High Temperature Electron Capture Detector and a Linearizer was used. A GC column capable of separating the MDA derivative from the solvent and interferences. A 6 ft x 2 mm ID glass column packed with 3% OV-101 coated on 100/120 Gas Chrom Q or a 25 meter DB-1 or DB-5 capillary column is recommended for this evaluation. An electronic integrator or some other suitable means of measuring peak areas or heights.

Small resealable vials with Teflon-lined caps capable of holding 4 mL. A dispenser or pipet for toluene capable of delivering 2.9 mL. Pipets (or repipets with plastic or Teflon tips) capable of delivering 1 mL for the sodium hydroxide and buffer solutions. A repipet capable of delivering 25 micro-L HFAA. Syringes for preparation of standards and injection of standards and samples into a GC. Volumetric flasks and pipets to dilute the pure MDA in preparation of standards. Disposable pipets to transfer the toluene layers after the samples are extracted.

Reagents:

0.5 NaOH prepared from reagent grade NaOH. Toluene, pesticide grade. Burdick and Jackson distilled in glass toluene was used. Heptafluorobutyric acid anhydride (HFAA). HFAA from Pierce Chemical Company was used. pH 7.0 phosphate buffer, prepared from 136 g potassium dihydrogen phosphate and 1 L deionized water. The pH is adjusted to 7.0 with saturated sodium hydroxide solution. 4,4'-methylenedianiline (MDA), reagent grade.

Standard preparation:

Concentrated stock standards are prepared by diluting pure MDA with toluene. Analytical standards are prepared by injecting micro-L amounts of diluted stock standards into vials that contain 2.0 mL toluene. 25 micro-L HFAA are added to each vial and the vials are capped and shaken for 10 seconds. After 10 min, 1 mL of buffer is added to each vial. The vials are recapped and shaken for 10 seconds. After allowing the layers to separate, aliquots of the toluene (upper) layers are removed with a syringe and analyzed by GC. Analytical standard concentrations should bracket sample concentrations. Thus, if samples fall out of the range of prepared standards, additional standards must be prepared to ascertain detector response.

WAC 296-155-17347 (Cont.)

Sample preparation:

The sample filters are received in vials containing deionized water. 1 mL of 0.5N NaOH and 2.0 mL toluene are added to each vial. The vials are recapped and shaken for 10 min. After allowing the layers to separate, approximately 1 mL aliquots of the toluene (upper) layers are transferred to separate vials with clean disposable pipets. The toluene layers are treated and analyzed.

Analysis:

GC conditions.

Zone temperatures: Column-220 degrees C. Injector-235 degrees C. Detector-335 degrees C. Gas flows, N2 Column-30 mL/min He Purge-Column 0.9 mL/min. (capillary) with 30 mL/min. $ArCH_4$ (95/5) make up gas Injection volume: 5.0 uL Column: 6 ft x 1/8 in ID glass, 3% OV-101 on 100/120 Gas Chrom Q or 25 Retention time of MDA derivative: 2.5 to 3.5, depending on column and flow.

Chromatogram. Peak areas or heights are measured by an integrator or other suitable means. A calibration curve is constructed by plotting response (peak areas or heights) of standard injections versus micro-g of MDA per sample. Sample concentrations must be bracketed by standards.

Interferences (analytical):

Any compound that gives an electron capture detector response and has the same general retention time as the HFAA derivative of MDA is a potential interference. Suspected interferences reported to the laboratory with submitted samples by the industrial hygienist must be considered before samples are derivatized. GC parameters may be changed to possibly circumvent interferences. Retention time on a single column is not considered proof of chemical identity. Analyte identity should be confirmed by GC/MS if possible.

Calculations:

The analyte concentration for samples is obtained from the calibration curve in terms of micro-g MDA per sample. The extraction efficiency is 100%. If any MDA is found on the blank, that amount is subtracted from the sample amounts. The air concentrations are calculated using the following formulae. micro-$\mu g/m^3$ = (micro-μg MDA per sample) (1000)/(L of air sampled) ppb = (micro-$\mu g/m^3$) (24.46)/(198.3) = (micro-$\mu g/m^3$)(0.1233) where 24.46 is the molar volume at 25 degrees C. and 760 mm Hg.

Safety precautions (analytical). Avoid skin contact and inhalation of all chemicals. Restrict the use of all chemicals to a fume hood if possible. Wear safety glasses and a lab coat at all times while in the lab area.
[Statutory Authority: Chapter 49.17 RCW. 93-04-111 (Order 92-15), § 296-155-17347, filed 2/3/93, effective 3/15/93.]

WAC 296-155-174 Cadmium.

(1) Scope. This standard applies to all occupational exposures to cadmium and cadmium compounds, in all forms, in all construction work where an employee may potentially be exposed to cadmium. Construction work is defined as work involving construction, alteration, and/or repair, including but not limited to the following:

(a) Wrecking, demolition, or salvage of structures where cadmium or materials containing cadmium are present;

(b) Use of cadmium containing-paints and cutting, brazing, burning, grinding, or welding on surfaces that were painted with cadmium-containing paints;

WAC 296-155-174 (Cont.)

(c) Construction, alteration, repair, maintenance, or renovation of structures, substrates, or portions thereof, that contain cadmium, or materials containing cadmium;

(d) Cadmium welding; cutting and welding cadmium-plated steel; brazing or welding with cadmium alloys;

(e) Installation of products containing cadmium;

(f) Electrical grounding with cadmium-welding, or electrical work using cadmium-coated conduit;

(g) Maintaining or retrofitting cadmium-coated equipment;

(h) Cadmium contamination/emergency cleanup; and

(i) Transportation, disposal, storage, or containment of cadmium or materials containing cadmium on the site or location at which construction activities are performed.

(2) Definitions.

(a) **Action level (AL)** is defined as an airborne concentration of cadmium of 2.5 micrograms per cubic meter of air (2.5 $\mu g/m^3$), calculated as an 8-hour time-weighted average (TWA).

(b) **Authorized person** means any person authorized by the employer and required by work duties to be present in regulated areas or any person authorized by WISHA or regulations issued under it to be in regulated areas.

(c) **Competent person**, in accordance with WAC 296-155-012(4), means a person designated by the employer to act on the employer's behalf who is capable of identifying existing and potential cadmium hazards in the workplace and the proper methods to control them in order to protect workers, and has the authority necessary to take prompt corrective measures to eliminate or control such hazards. The duties of a competent person include at least the following: Determining prior to the performance of work whether cadmium is present in the workplace; establishing, where necessary, regulated areas and assuring that access to and from those areas is limited to authorized employees; assuring the adequacy of any employee exposure monitoring required by this standard; assuring that all employees exposed to air cadmium levels above the PEL wear appropriate personal protective equipment and are trained in the use of appropriate methods of exposure control; assuring that proper hygiene facilities are provided and that workers are trained to use those facilities; and assuring that the engineering controls required by this standard are implemented, maintained in proper operating condition, and functioning properly.

(d) **Director** means the director of the department of labor and industries or authorized representative.

(e) **Employee exposure and similar language referring to the air cadmium level to which an employee is exposed** means the exposure to airborne cadmium that would occur if the employee were not using respiratory protective equipment.

(f) **Final medical determination** is the written medical opinion of the employee's health status by the examining physician under subsection (12)(c) through (l) of this section or, if multiple physician review under subsection (12)(m) of this section or the alternative physician determination under subsection (12)(n) of this section is invoked, it is the final, written medical finding, recommendation or determination that emerges from that process.

WAC 296-155-174 (Cont.)

(g) **High-efficiency particulate air (HEPA) filter** means a filter capable of trapping and retaining at least 99.97 percent of mono-dispersed particles of 0.3 micrometers in diameter.

(h) **Regulated area** means an area demarcated by the employer where an employee's exposure to airborne concentrations of cadmium exceeds, or can reasonably be expected to exceed the permissible exposure limit (PEL).

(i) **This section** means this cadmium standard.

(3) Permissible exposure limit (PEL). The employer shall assure that no employee is exposed to an airborne concentration of cadmium in excess of five micrograms per cubic meter of air (5 $\mu g/m^3$), calculated as an 8-hour time-weighted average exposure (TWA).

(4) Exposure monitoring

(a) General.

(i) Prior to the performance of any construction work where employees may be potentially exposed to cadmium, the employer shall establish the applicability of this standard by determining whether cadmium is present in the workplace and whether there is the possibility that employee exposures will be at or above the action level. The employer shall designate a competent person who shall make this determination.

Investigation and material testing techniques shall be used, as appropriate, in the determination. Investigation shall include a review of relevant plans, past reports, material safety data sheets, and other available records, and consultations with the property owner and discussions with appropriate individuals and agencies.

(ii) Where cadmium has been determined to be present in the workplace, and it has been determined that there is a possibility the employee's exposure will be at or above the action level, the competent person shall identify employees potentially exposed to cadmium at or above the action level.

(iii) Determinations of employee exposure shall be made from breathing-zone air samples that reflect the monitored employee's regular, daily 8-hour TWA exposure to cadmium.

(iv) Eight-hour TWA exposures shall be determined for each employee on the basis of one or more personal breathing-zone air samples reflecting full shift exposure on each shift, for each job classification, in each work area. Where several employees perform the same job tasks, in the same job classification, on the same shift, in the same work area, and the length, duration, and level of cadmium exposures are similar, an employer may sample a representative fraction of the employees instead of all employees in order to meet this requirement. In representative sampling, the employer shall sample the employee(s) expected to have the highest cadmium exposures.

(b) Specific.

(i) Initial monitoring. Except as provided for in (b)(iii) of this subsection, where a determination conducted under (a)(i) of this subsection shows the possibility of employee exposure to cadmium at or above the action level, the employer shall conduct exposure

WAC 296-155-174 (Cont.)

monitoring as soon as practicable that is representative of the exposure for each employee in the workplace who is or may be exposed to cadmium at or above the action level.

(ii) In addition, if the employee periodically performs tasks that may expose the employee to a higher concentration of airborne cadmium, the employee shall be monitored while performing those tasks.

(iii) Where the employer has objective data, as defined in subsection (14)(b) of this section, demonstrating that employee exposure to cadmium will not exceed airborne concentrations at or above the action level under the expected conditions of processing, use, or handling, the employer may rely upon such data instead of implementing initial monitoring.

(iv) Where a determination conducted under (a) or (b) of this subsection is made that a potentially exposed employee is not exposed to airborne concentrations of cadmium at or above the action level, the employer shall make a written record of such determination. The record shall include at least the monitoring data developed under (b)(i) through (iii) of this subsection, where applicable, and shall also include the date of determination, and the name and Social Security number of each employee.

(c) Monitoring frequency (periodic monitoring).

(i) If the initial monitoring or periodic monitoring reveals employee exposures to be at or above the action level, the employer shall monitor at a frequency and pattern needed to assure that the monitoring results reflect with reasonable accuracy the employee's typical exposure levels, given the variability in the tasks performed, work practices, and environmental conditions on the job site, and to assure the adequacy of respiratory selection and the effectiveness of engineering and work practice controls.

(ii) If the initial monitoring or the periodic monitoring indicates that employee exposures are below the action level and that result is confirmed by the results of another monitoring taken at least seven days later, the employer may discontinue the monitoring for those employees whose exposures are represented by such monitoring.

(d) Additional monitoring. The employer also shall institute the exposure monitoring required under (b)(i) and (c) of this subsection whenever there has been a change in the raw materials, equipment, personnel, work practices, or finished products that may result in additional employees being exposed to cadmium at or above the action level or in employees already exposed to cadmium at or above the action level being exposed above the PEL, or whenever the employer or competent person has any reason to suspect that any other change might result in such further exposure.

(e) Employee notification of monitoring results.

(i) No later than five working days after the receipt of the results of any monitoring performed under this section, the employer shall notify each affected employee individually in writing of the results. In addition, within the same time period, the employer shall post the results of the exposure monitoring in an appropriate location that is accessible to all affected employees.

WAC 296-155-174 (Cont.)

(ii) Wherever monitoring results indicate that employee exposure exceeds the PEL, the employer shall include in the written notice a statement that the PEL has been exceeded and a description of the corrective action being taken by the employer to reduce employee exposure to or below the PEL.

(f) Accuracy of measurement. The employer shall use a method of monitoring and analysis that has an accuracy of not less than plus or minus 25 percent (± 25%), with a confidence level of 95 percent, for airborne concentrations of cadmium at or above the action level and the permissible exposure limit.

(5) Regulated areas.

(a) Establishment. The employer shall establish a regulated area wherever an employee's exposure to airborne concentrations of cadmium is, or can reasonably be expected to be in excess of the permissible exposure limit (PEL).

(b) Demarcation. Regulated areas shall be demarcated from the rest of the workplace in any manner that adequately establishes and alerts employees of the boundaries of the regulated area, including employees who are or may be incidentally in the regulated areas, and that protects persons outside the area from exposure to airborne concentrations of cadmium in excess of the PEL.

(c) Access. Access to regulated areas shall be limited to authorized persons.

(d) Provision of respirators. Each person entering a regulated area shall be supplied with and required to use a respirator, selected in accordance with subsection (7)(b) of this section.

(e) Prohibited activities. The employer shall assure that employees do not eat, drink, smoke, chew tobacco or gum, or apply cosmetics in regulated areas, or carry the products associated with any of these activities into regulated areas or store such products in those areas.

(6) Methods of compliance.

(a) Compliance hierarchy.

(i) Except as specified in (a)(ii) of this subsection, the employer shall implement engineering and work practice controls to reduce and maintain employee exposure to cadmium at or below the PEL, except to the extent that the employer can demonstrate that such controls are not feasible.

(ii) The requirement to implement engineering controls to achieve the PEL does not apply where the employer demonstrates the following:

(A) The employee is only intermittently exposed; and

(B) The employee is not exposed above the PEL on 30 or more days per year (12 consecutive months).

(iii) Wherever engineering and work practice controls are not sufficient to reduce employee exposure to or below the PEL, the employer nonetheless shall implement such controls to reduce exposures to the lowest levels achievable. The employer shall supplement such controls with respiratory protection that complies with the requirements of subsection (7) of this section and the PEL.

WAC 296-155-174 (Cont.)

(iv) The employer shall not use employee rotation as a method of compliance.

(b) Specific operations.

(i) Abrasive blasting. Abrasive blasting on cadmium or cadmium-containing materials shall be conducted in a manner that will provide adequate protection.

(ii) Heating cadmium and cadmium-containing materials. Welding, cutting, and other forms of heating of cadmium or cadmium-containing materials shall be conducted in accordance with the requirements of WAC 296-155-415 and 296-155-420, where applicable.

(c) Prohibitions.

(i) High speed abrasive disc saws and similar abrasive power equipment shall not be used for work on cadmium or cadmium-containing materials unless they are equipped with appropriate engineering controls to minimize emissions, if the exposure levels are above the PEL.

(ii) Materials containing cadmium shall not be applied by spray methods, if exposures are above the PEL, unless employees are protected with supplied-air respirators with full facepiece, hood, helmet, suit, operated in positive pressure mode and measures are instituted to limit overspray and prevent contamination of adjacent areas.

(d) Mechanical ventilation.

(i) When ventilation is used to control exposure, measurements that demonstrate the effectiveness of the system in controlling exposure, such as capture velocity, duct velocity, or static pressure shall be made as necessary to maintain its effectiveness.

(ii) Measurements of the system's effectiveness in controlling exposure shall be made as necessary within five working days of any change in production, process, or control that might result in a significant increase in employee exposure to cadmium.

(iii) Recirculation of air. If air from exhaust ventilation is recirculated into the workplace, the system shall have a high efficiency filter and be monitored to assure effectiveness.

(iv) Procedures shall be developed and implemented to minimize employee exposure to cadmium when maintenance of ventilation systems and changing of filters is being conducted.

(e) Compliance program.

(i) Where employee exposure to cadmium exceeds the PEL and the employer is required under (a) of this subsection to implement controls to comply with the PEL prior to commencement of the job the employer shall establish and implement a written compliance program to reduce employee exposure to or below the PEL.

(ii) Written compliance programs shall be reviewed and updated as often and as promptly as necessary to reflect significant changes in the employer's compliance status or significant changes in the lowest air cadmium level that is technologically feasible.

WAC 296-155-174 (Cont.)

(iii) A competent person shall review the comprehensive compliance program initially and after each change.

(iv) Written compliance programs shall be provided upon request for examination and copying to the director, or authorized representatives, affected employees, and designated employee representatives.

(7) Respirator protection.

(a) General. For employees who use respirators required by this section, the employer must provide respirators that comply with the requirements of this section. Respirators must be used during:

(i) Periods necessary to install or implement feasible engineering and work-practice controls when employee exposures exceed the PEL.

(ii) Maintenance and repair activities, and brief or intermittent operations, for which employee exposures exceed the PEL and engineering and work-practice controls are not feasible or are not required.

(iii) Work operations in regulated areas in subsection (5) of this section.

(iv) Work operations for which the employer has implemented all feasible engineering and work-practice controls, and such controls are not sufficient to reduce exposures to or below the PEL.

(v) Emergencies.

(vi) Work operations for which an employee, who is exposed to cadmium at or above the action level, requests a respirator.

(vii) Work operations for which engineering controls are not required under (a)(ii) of this subsection to reduce employee exposures that exceed the PEL.

(b) Respirator program.

(i) The employer must implement a respiratory protection program as required by chapter 296-62 WAC, Part E (except WAC 296-62-07130(1) and WAC 296-62-07150 through WAC 296-62-07156).

(ii) If an employee has breathing difficulty during fit testing or respirator use, the employer must provide the employee with a medical examination as required by subsection (12)(f)(ii) of this section to determine if the employee can use a respirator while performing the required duties.

(iii) No employees must use a respirator when, based on their recent medical examination, the examining physician determines that the employee will be unable to continue to function normally while using a respirator. If the physician determines the employee must be limited in, or removed from, their current job because of the employee's inability to use a respirator, the job limitation or removal must be conducted as required by (k) and (l) of this subsection.

WAC 296-155-174 (Cont.)

(c) Respirator selection.

(i) The employer must select the appropriate respirator from Table I of this section.

Table I
Respiratory Protection for Cadmium

Airborne concentration Or condition of use[a]	Required respirator type[b]
10 x or less	A half-mask, air-purifying respirator equipped with a HEPA[c] filter.[d]
25 x or less	A powered air-purifying respirator("PAPR") with a loose-fitting hood or helmet equipped with a HEPA filter, or a supplied-air respirator with a loose-fitting hood or helmet facepiece operated in the continuous flow mode.
50 x or less	A full facepiece air-purifying respirator equipped with a HEPA filter, or a powered air-purifying respirator with a tight-fitting half-mask equipped with a HEPA filter, or a supplied air respirator with a tight-fitting half-mask operated in the continuous flow mode.
250 x or less	A powered air-purifying respirator with a tight-fitting full facepiece equipped with a HEPA filter, or a supplied-air respirator with a tight-fitting full facepiece operated in the continuous flow mode.
1000 x or less	A supplied-air respirator with half-mask or full facepiece operated in the pressure demand or other positive pressure mode.
>1000 x or unknown concentrations	A self-contained breathing apparatus with a full facepiece operated in the pressure demand or other positive pressure mode, or a supplied-air respirator with a full facepiece operated in the pressure demand or other positive pressure mode and equipped with an auxiliary escape type self-contained breathing apparatus operated in the pressure demand mode.
Fire fighting	A self-contained breathing apparatus with full facepiece operated in the pressure demand or other positive pressure mode.

Note:

[a]Concentrations expressed as multiple of the PEL.
[b]Respirators assigned for higher environmental concentrations may be used at lower exposure levels.

Quantitative fit testing is required for all tight-fitting air purifying respirators where airborne concentration of cadmium exceeds 10 times the TWA PEL (10 x 5 $\mu g/m^3$ = 50 $\mu g/m^3$). A full facepiece respirator is required when eye irritation is experienced.

WAC 296-155-174 (Cont.)

[C] HEPA means High Efficiency Particulate Air.
[D] Fit testing, qualitative or quantitative, is required.

Source: Respiratory Decision Logic, NIOSH, 1987.

(ii) The employer shall provide a powered, air-purifying respirator (PAPR) instead of a negative-pressure respirator when an employee entitled to a respirator chooses to use this type of respirator and such a respirator will provide adequate protection to the employee.

(8) Emergency situations. The employer shall develop and implement a written plan for dealing with emergency situations involving substantial releases of airborne cadmium. The plan shall include provisions for the use of appropriate respirators and personal protective equipment. In addition, employees not essential to correcting the emergency situation shall be restricted from the area and normal operations halted in that area until the emergency is abated.

(9) Protective work clothing and equipment.

(a) Provision and use. If an employee is exposed to airborne cadmium above the PEL or where skin or eye irritation is associated with cadmium exposure at any level, the employer shall provide at no cost to the employee, and assure that the employee uses, appropriate protective work clothing and equipment that prevents contamination of the employee and the employee's garments. Protective work clothing and equipment includes, but is not limited to:

(i) Coveralls or similar full-body work clothing;

(ii) Gloves, head coverings, and boots or foot coverings; and

(iii) Face shields, vented goggles, or other appropriate protective equipment that complies with WAC 296-155-215.

(b) Removal and storage.

(i) The employer shall assure that employees remove all protective clothing and equipment contaminated with cadmium at the completion of the work shift and do so only in change rooms provided in accordance with subsection (10)(a) of this section.

(ii) The employer shall assure that no employee takes cadmium-contaminated protective clothing or equipment from the workplace, except for employees authorized to do so for purposes of laundering, cleaning, maintaining, or disposing of cadmium-contaminated protective clothing and equipment at an appropriate location or facility away from the workplace.

(iii) The employer shall assure that contaminated protective clothing and equipment, when removed for laundering, cleaning, maintenance, or disposal, is placed and stored in sealed, impermeable bags or other closed, impermeable containers that are designed to prevent dispersion of cadmium dust.

(iv) The employer shall assure that containers of contaminated protective clothing and equipment that are to be taken out of the change rooms or the workplace for laundering, cleaning, maintenance or disposal shall bear labels in accordance with subsection (13)(c) of this section.

WAC 296-155-174 (Cont.)

(c) Cleaning, replacement, and disposal.

(i) The employer shall provide the protective clothing and equipment required by (a) of this subsection in a clean and dry condition as often as necessary to maintain its effectiveness, but in any event at least weekly. The employer is responsible for cleaning and laundering the protective clothing and equipment required by this subsection to maintain its effectiveness and is also responsible for disposing of such clothing and equipment.

(ii) The employer also is responsible for repairing or replacing required protective clothing and equipment as needed to maintain its effectiveness. When rips or tears are detected while an employee is working they shall be immediately mended, or the worksuit shall be immediately replaced.

(iii) The employer shall prohibit the removal of cadmium from protective clothing and equipment by blowing, shaking, or any other means that disperses cadmium into the air.

(iv) The employer shall assure that any laundering of contaminated clothing or cleaning of contaminated equipment in the workplace is done in a manner that prevents the release of airborne cadmium in excess of the permissible exposure limit prescribed in subsection (3) of this section.

(v) The employer shall inform any person who launders or cleans protective clothing or equipment contaminated with cadmium of the potentially harmful effects of exposure to cadmium, and that the clothing and equipment should be laundered or cleaned in a manner to effectively prevent the release of airborne cadmium in excess of the PEL.

(10) Hygiene areas and practices.

(a) General. For employees whose airborne exposure to cadmium is above the PEL, the employer shall provide clean change rooms, handwashing facilities, showers, and lunchroom facilities that comply with WAC 296-155-140.

(b) Change rooms. The employer shall assure that change rooms are equipped with separate storage facilities for street clothes and for protective clothing and equipment, which are designed to prevent dispersion of cadmium and contamination of the employee's street clothes.

(c) Showers and handwashing facilities.

(i) The employer shall assure that employees whose airborne exposure to cadmium is above the PEL shower during the end of the work shift.

(ii) The employer shall assure that employees who are exposed to cadmium above the PEL wash their hands and faces prior to eating, drinking, smoking, chewing tobacco or gum, or applying cosmetics.

(d) Lunchroom facilities.

(i) The employer shall assure that the lunchroom facilities are readily accessible to employees, that tables for eating are maintained free of cadmium, and that no employee in a lunchroom facility is exposed at any time to cadmium at or above a concentration of 2.5 $\mu g/m^3$.

WAC 296-155-174 (Cont.)

(ii) The employer shall assure that employees do not enter lunchroom facilities with protective work clothing or equipment unless surface cadmium has been removed from the clothing and equipment by HEPA vacuuming or some other method that removes cadmium dust without dispersing it.

(11) Housekeeping.

(a) All surfaces shall be maintained as free as practicable of accumulations of cadmium.

(b) All spills and sudden releases of material containing cadmium shall be cleaned up as soon as possible.

(c) Surfaces contaminated with cadmium shall, wherever possible, be cleaned by vacuuming or other methods that minimize the likelihood of cadmium becoming airborne.

(d) HEPA-filtered vacuuming equipment or equally effective filtration methods shall be used for vacuuming. The equipment shall be used and emptied in a manner that minimizes the reentry of cadmium into the workplace.

(e) Shoveling, dry or wet sweeping, and brushing may be used only where vacuuming or other methods that minimize the likelihood of cadmium becoming airborne have been tried and found not to be effective.

(f) Compressed air shall not be used to remove cadmium from any surface unless the compressed air is used in conjunction with a ventilation system designed to capture the dust cloud created by the compressed air.

(g) Waste, scrap, debris, bags, containers, personal protective equipment, and clothing contaminated with cadmium and consigned for disposal shall be collected and disposed of in sealed impermeable bags or other closed, impermeable containers. These bags and containers shall be labeled in accordance with subsection (13)(b) of this section.

(12) Medical surveillance.

(a) General.

(i) Scope.

(A) Currently exposed - The employer shall institute a medical surveillance program for all employees who are or may be exposed at or above the action level and all employees who perform the following tasks, operations, or jobs: Electrical grounding with cadmium-welding; cutting, brazing, burning, grinding, or welding on surfaces that were painted with cadmium-containing paints; electrical work using cadmium-coated conduit; use of cadmium containing paints; cutting and welding cadmium-plated steel; brazing or welding with cadmium alloys; fusing of reinforced steel by cadmium welding; maintaining or retrofitting cadmium-coated equipment; and, wrecking and demolition where cadmium is present. A medical surveillance program will not be required if the employer demonstrates that the employee:

WAC 296-155-174 (Cont.)

(I) Is not currently exposed by the employer to airborne concentrations of cadmium at or above the action level on 30 or more days per year (twelve consecutive months); and

(II) Is not currently exposed by the employer in those tasks on 30 or more days per year (twelve consecutive months).

(B) Previously exposed - The employer shall also institute a medical surveillance program for all employees who might previously have been exposed to cadmium by the employer prior to the effective date of this section in tasks specified under (a)(i)(A) of this subsection, unless the employer demonstrates that the employee did not in the years prior to the effective date of this section work in those tasks for the employer with exposure to cadmium for an aggregated total of more than 12 months.

(ii) To determine an employee's fitness for using a respirator, the employer shall provide the limited medical examination specified in (f) of this subsection.

(iii) The employer shall assure that all medical examinations and procedures required by this section are performed by or under the supervision of a licensed physician, who has read and is familiar with the health effects WAC 296-62-07441, Appendix A, the regulatory text of this section, the protocol for sample handling and lab selection in WAC 296-62-07451, Appendix F, and the questionnaire of WAC 296-62-07447, Appendix D.

(iv) The employer shall provide the medical surveillance required by this section, including multiple physician review under (m) of this subsection without cost to employees, and at a time and place that is reasonable and convenient to employees.

(v) The employer shall assure that the collecting and handling of biological samples of cadmium in urine (CdU), cadmium in blood (CdB), and beta-2 microglobulin in urine (B_2-M) taken from employees under this section is done in a manner that assures their reliability and that analysis of biological samples of cadmium in urine (CdU), cadmium in blood (CdB), and beta-2 microglobulin in urine (B_2-M) taken from employees under this section is performed in laboratories with demonstrated proficiency to perform the particular analysis. (See WAC 296-62-07451, Appendix F.)

(b) Initial examination.

(i) For employees covered by medical surveillance under (a)(i) of this subsection, the employer shall provide an initial medical examination. The examination shall be provided to those employees within 30 days after initial assignment to a job with exposure to cadmium or no later than 90 days after the effective date of this section, whichever date is later.

(ii) The initial medical examination shall include:

(A) A detailed medical and work history, with emphasis on: Past, present, and anticipated future exposure to cadmium; any history of renal, cardiovascular, respiratory, hematopoietic, reproductive, and/or musculo-skeletal system dysfunction; current usage of medication with potential nephrotoxic side-effects; and smoking history and current status; and

WAC 296-155-174 (Cont.)

(B) Biological monitoring that includes the following tests:

(I) Cadmium in urine (CdU), standardized to grams of creatinine (g/Cr);

(II) Beta-2 microglobulin in urine (B_2-M), standardized to grams of creatinine (g/Cr), with pH specified, as described in WAC 296-62-07451, Appendix F; and

(III) Cadmium in blood (CdB), standardized to liters of whole blood (lwb).

(iii) Recent examination: An initial examination is not required to be provided if adequate records show that the employee has been examined in accordance with the requirements of (b)(ii) of this subsection within the past 12 months. In that case, such records shall be maintained as part of the employee's medical record and the prior exam shall be treated as if it were an initial examination for the purposes of (c) and (d) of this subsection.

(c) Actions triggered by initial biological monitoring.

(i) If the results of the biological monitoring tests in the initial examination show the employee's CdU level to be at or below 3 µg/g Cr, B_2-M level to be at or below 300 µg/g Cr and CdB level to be at or below 5 µg/lwb, then:

(A) For employees who are subject to medical surveillance under (a)(i)(A) of this subsection because of current or anticipated exposure to cadmium, the employer shall provide the minimum level of periodic medical surveillance in accordance with the requirements in (d)(i) of this subsection; and

(B) For employees who are subject to medical surveillance under (a)(i)(B) of this subsection because of prior but not current exposure, the employer shall provide biological monitoring for CdU, B_2-M, and CdB one year after the initial biological monitoring and then the employer shall comply with the requirements of (d)(vi) of this subsection.

(ii) For all employees who are subject to medical surveillance under (a)(i) of this subsection, if the results of the initial biological monitoring tests show the level of CdU to exceed 3 µg/g Cr, the level of B_2-M to be in excess of 300 µg/g Cr, or the level of CdB to be in excess of 5 µg/lwb, the employer shall:

(A) Within two weeks after receipt of biological monitoring results, reassess the employee's occupational exposure to cadmium as follows:

(I) Reassess the employee's work practices and personal hygiene;

(II) Reevaluate the employee's respirator use, if any, and the respirator program;

(III) Review the hygiene facilities;

(IV) Reevaluate the maintenance and effectiveness of the relevant engineering controls;

WAC 296-155-174 (Cont.)

(V) Assess the employee's smoking history and status;

(B) Within 30 days after the exposure reassessment, specified in (c)(ii)(A) of this subsection, take reasonable steps to correct any deficiencies found in the reassessment that may be responsible for the employee's excess exposure to cadmium; and

(C) Within 90 days after receipt of biological monitoring results, provide a full medical examination to the employee in accordance with the requirements of (d)(ii) of this subsection. After completing the medical examination, the examining physician shall determine in a written medical opinion whether to medically remove the employee. If the physician determines that medical removal is not necessary, then until the employee's CdU level falls to or below 3 µg/g Cr, B_2-M level falls to or below 300 µg/g Cr and CdB level falls to or below 5 µg/lwb, the employer shall:

(I) Provide biological monitoring in accordance with (b)(ii)(B) of this subsection on a semiannual basis; and

(II) Provide annual medical examinations in accordance with (d)(ii) of this subsection.

(iii) For all employees who are subject to medical surveillance under (a)(i) of this subsection, if the results of the initial biological monitoring tests show the level of CdU to be in excess of 15 µg/g Cr, or the level of CdB to be in excess of 15 µg/lwb, or the level of B_2-M to be in excess of 1,500 µg/g Cr, the employer shall comply with the requirements of (c)(ii)(A) and (B) of this subsection. Within 90 days after receipt of biological monitoring results, the employer shall provide a full medical examination to the employee in accordance with the requirements of (d)(ii) of this subsection. After completing the medical examination, the examining physician shall determine in a written medical opinion whether to medically remove the employee. However, if the initial biological monitoring results and the biological monitoring results obtained during the medical examination both show that: CdU exceeds 15 µg/g Cr; or CdB exceeds 15 µ g/lwb; or B_2-M exceeds 1500 µ/g Cr, and in addition CdU exceeds 3 µg/g Cr or CdB exceeds 5 µg/liter of whole blood, then the physician shall medically remove the employee from exposure to cadmium at or above the action level. If the second set of biological monitoring results obtained during the medical examination does not show that a mandatory removal trigger level has been exceeded, then the employee is not required to be removed by the mandatory provisions of this section. If the employee is not required to be removed by the mandatory provisions of this section or by the physician's determination, then until the employee's CdU level falls to or below 3 µg/g Cr, B_2-M level falls to or below 300 µg/g Cr and CdB level falls to or below 5 µg/lwb, the employer shall:

(A) Periodically reassess the employee's occupational exposure to cadmium;

(B) Provide biological monitoring in accordance with (b)(ii)(B) of this subsection on a quarterly basis; and

(C) Provide semiannual medical examinations in accordance with (d)(ii) of this subsection.

WAC 296-155-174 (Cont.)

(iv) For all employees to whom medical surveillance is provided, beginning on January 1, 1999, and in lieu of (c)(iii) of this subsection, whenever the results of initial biological monitoring tests show the employee's CdU level to be in excess of 7 µg/g Cr, or B_2-M level to be in excess of 750 µg/g Cr, or CdB level to be in excess of 10 µg/lwb, the employer shall comply with the requirements of (c)(ii)(A) and (B) of this subsection.

Within 90 days after receipt of biological monitoring results, the employer shall provide a full medical examination to the employee in accordance with the requirements of (d)(ii) of this subsection. After completing the medical examination, the examining physician shall determine in a written medical opinion whether to medically remove the employee. However, if the initial biological monitoring results and the biological monitoring results obtained during the medical examination both show that: CdU exceeds 7 µg/g Cr; or CdB exceeds 10 µg/lwb; or B_2-M exceeds 750 µg/g Cr, and in addition CdU exceeds 3 µ g/g Cr or CdB exceeds 5 µg/liter of whole blood, then the physician shall medically remove the employee from exposure to cadmium at or above the action level. If the second set of biological monitoring results obtained during the medical examination does not show that a mandatory removal trigger level has been exceeded, then the employee is not required to be removed by the mandatory provisions of this section. If the employee is not required to be removed by the mandatory provisions of this section or by the physician's determination, then until the employee's CdU level falls to or below 3 µg/g Cr, B_2-M level falls to or below 300 µg/g Cr and CdB level falls to or below 5 µg/lwb, the employer shall:

(A) Periodically reassess the employee's occupational exposure to cadmium;

(B) Provide biological monitoring in accordance with (b)(ii)(B) of this subsection on a quarterly basis; and

(C) Provide semiannual medical examinations in accordance with (d)(ii) of this subsection.

(d) Periodic medical surveillance.

(i) For each employee who is covered by medical surveillance under (a)(i)(A) of this subsection because of current or anticipated exposure to cadmium, the employer shall provide at least the minimum level of periodic medical surveillance, which consists of periodic medical examinations and periodic biological monitoring. A periodic medical examination shall be provided within one year after the initial examination required by (b) of this subsection and thereafter at least biennially. Biological sampling shall be provided at least annually either as part of a periodic medical examination or separately as periodic biological monitoring.

(ii) The periodic medical examination shall include:

(A) A detailed medical and work history, or update thereof, with emphasis on: Past, present, and anticipated future exposure to cadmium; smoking history and current status; reproductive history; current use of medications with potential nephrotoxic side-effects; any history of renal, cardiovascular, respiratory, hematopoietic, and/or musculo-skeletal system dysfunction; and as part of the medical and work history, for employees who wear respirators, questions 3 through 11 and 25 through 32 in WAC 296-62-07447, Appendix D;

WAC 296-155-174 (Cont.)

(B) A complete physical examination with emphasis on: Blood pressure, the respiratory system, and the urinary system;

(C) A 14 inch by 17 inch, or a reasonably standard sized posterior-anterior chest x-ray (after the initial x-ray, the frequency of chest x-rays is to be determined by the examining physician);

(D) Pulmonary function tests, including forced vital capacity (FVC) and forced expiratory volume at 1 second (FEV1);

(E) Biological monitoring, as required in (b)(ii)(B) of this subsection;

(F) Blood analysis, in addition to the analysis required under (b)(ii)(B) of this subsection, including blood urea nitrogen, complete blood count, and serum creatinine;

(G) Urinalysis, in addition to the analysis required under (b)(ii)(B) of this subsection, including the determination of albumin, glucose, and total and low molecular weight proteins;

(H) For males over 40 years old, prostate palpation, or other at least as effective diagnostic test(s); and

(I) Any additional tests or procedures deemed appropriate by the examining physician.

(iii) Periodic biological monitoring shall be provided in accordance with (b)(ii)(B) of this subsection.

(iv) If the results of periodic biological monitoring or the results of biological monitoring performed as part of the periodic medical examination show the level of the employee's CdU, B_2-M, or CdB to be in excess of the levels specified in (c)(ii) and (iii) of this subsection; or, beginning on January 1, 1999, in excess of the levels specified in (c)(ii) or (iv) of this subsection, the employer shall take the appropriate actions specified in (c)(ii) through (iv) of this subsection, respectively.

(v) For previously exposed employees under (a)(i)(B) of this subsection:

(A) If the employee's levels of CdU did not exceed 3 µg/g Cr, CdB did not exceed 5 µg/lwb, and B_2-M did not exceed 300 µg/g Cr in the initial biological monitoring tests, and if the results of the follow-up biological monitoring required by (c)(i)(B) of this subsection one year after the initial examination confirm the previous results, the employer may discontinue all periodic medical surveillance for that employee.

(B) If the initial biological monitoring results for CdU, CdB, or B_2-M were in excess of the levels specified in (c)(i) of this subsection, but subsequent biological monitoring results required by (c)(ii) through (iv) of this subsection show that the employee's CdU levels no longer exceed 3 µg/g Cr, CdB levels no longer exceed 5 µg/lwb, and B_2-M levels no longer exceed 300 µg/g Cr, the employer shall provide biological monitoring for CdU, CdB, and B_2-M one year after these most recent biological monitoring results. If the results of

WAC 296-155-174 (Cont.)

the follow-up biological monitoring specified in this section, confirm the previous results, the employer may discontinue all periodic medical surveillance for that employee.

(C) However, if the results of the follow-up tests specified in (d)(v)(A) or (B) of this subsection indicate that the level of the employee's CdU, B_2-M, or CdB exceeds these same levels, the employer is required to provide annual medical examinations in accordance with the provisions of (d)(ii) of this subsection until the results of biological monitoring are consistently below these levels or the examining physician determines in a written medical opinion that further medical surveillance is not required to protect the employee's health.

(vi) A routine, biennial medical examination is not required to be provided in accordance with (c)(i) and (d) of this subsection if adequate medical records show that the employee has been examined in accordance with the requirements of (d)(ii) of this subsection within the past 12 months. In that case, such records shall be maintained by the employer as part of the employee's medical record, and the next routine, periodic medical examination shall be made available to the employee within two years of the previous examination.

(e) Actions triggered by medical examinations. If the results of a medical examination carried out in accordance with this section indicate any laboratory or clinical finding consistent with cadmium toxicity that does not require employer action under (b), (c), or (d) of this subsection, the employer shall take the following steps and continue to take them until the physician determines that they are no longer necessary.

(i) Periodically reassess: The employee's work practices and personal hygiene; the employee's respirator use, if any; the employee's smoking history and status; the respiratory protection program; the hygiene facilities; the maintenance and effectiveness of the relevant engineering controls; and take all reasonable steps to correct the deficiencies found in the reassessment that may be responsible for the employee's excess exposure to cadmium.

(ii) Provide semiannual medical reexaminations to evaluate the abnormal clinical sign(s) of cadmium toxicity until the results are normal or the employee is medically removed; and

(iii) Where the results of tests for total proteins in urine are abnormal, provide a more detailed medical evaluation of the toxic effects of cadmium on the employee's renal system.

(f) Examination for respirator use.

(i) To determine an employee's fitness for respirator use, the employer shall provide a medical examination that includes the elements specified in (f)(i)(A) through (D) of this subsection. This examination shall be provided prior to the employee's being assigned to a job that requires the use of a respirator or no later than 90 days after this section goes into effect, whichever date is later, to any employee without a medical examination within the preceding 12 months that satisfies the requirements of this section.

WAC 296-155-174 (Cont.)

(A) A detailed medical and work history, or update thereof, with emphasis on: Past exposure to cadmium; smoking history and current status; any history of renal, cardiovascular, respiratory, hematopoietic, and/or musculo-skeletal system dysfunction; a description of the job for which the respirator is required; and questions 3 through 11 and 25 through 32 in WAC 296-62-07447, Appendix D;

(B) A blood pressure test;

(C) Biological monitoring of the employee's levels of CdU, CdB and B_2-M in accordance with the requirements of (b)(ii)(B) of this subsection, unless such results already have been obtained within the twelve months; and

(D) Any other test or procedure that the examining physician deems appropriate.

(ii) After reviewing all the information obtained from the medical examination required in (f)(i) of this subsection, the physician shall determine whether the employee is fit to wear a respirator.

(iii) Whenever an employee has exhibited difficulty in breathing during a respirator fit test or during use of a respirator, the employer, as soon as possible, shall provide the employee with a periodic medical examination in accordance with (d)(ii) of this subsection to determine the employee's fitness to wear a respirator.

(iv) Where the results of the examination required under (f)(i), (ii), or (iii) of this subsection are abnormal, medical limitation or prohibition of respirator use shall be considered. If the employee is allowed to wear a respirator, the employee's ability to continue to do so shall be periodically evaluated by a physician.

(g) Emergency examinations.

(i) In addition to the medical surveillance required in (b) through (f) of this subsection, the employer shall provide a medical examination as soon as possible to any employee who may have been acutely exposed to cadmium because of an emergency.

(ii) The examination shall include the requirements of (d)(ii), of this subsection, with emphasis on the respiratory system, other organ systems considered appropriate by the examining physician, and symptoms of acute overexposure, as identified in Appendix A, WAC 296-62-07441 (2)(b)(i) and (ii) and (4).

(h) Termination of employment examination.

(i) At termination of employment, the employer shall provide a medical examination in accordance with (d)(ii) of this subsection, including a chest x-ray where necessary, to any employee to whom at any prior time the employer was required to provide medical surveillance under (a)(i) or (g) of this subsection. However, if the last examination satisfied the requirements of (d)(ii) of this subsection and was less than six months prior to the date of termination, no further examination is required unless otherwise specified in (c) or (e) of this subsection;

WAC 296-155-174 (Cont.)

(ii) In addition, if the employer has discontinued all periodic medical surveillance under (d)(v) of this subsection, no termination of employment medical examination is required.

(i) Information provided to the physician. The employer shall provide the following information to the examining physician:

(i) A copy of this standard and appendices;

(ii) A description of the affected employee's former, current, and anticipated duties as they relate to the employee's occupational exposure to cadmium;

(iii) The employee's former, current, and anticipated future levels of occupational exposure to cadmium;

(iv) A description of any personal protective equipment, including respirators, used or to be used by the employee, including when and for how long the employee has used that equipment; and

(v) Relevant results of previous biological monitoring and medical examinations.

(j) Physician's written medical opinion.

(i) The employer shall promptly obtain a written, signed, medical opinion from the examining physician for each medical examination performed on each employee. This written opinion shall contain:

(A) The physician's diagnosis for the employee;

(B) The physician's opinion as to whether the employee has any detected medical condition(s) that would place the employee at increased risk of material impairment to health from further exposure to cadmium, including any indications of potential cadmium toxicity;

(C) The results of any biological or other testing or related evaluations that directly assess the employee's absorption of cadmium;

(D) Any recommended removal from, or limitation on the activities or duties of the employee or on the employee's use of personal protective equipment, such as respirators;

(E) A statement that the physician has clearly and carefully explained to the employee the results of the medical examination, including all biological monitoring results and any medical conditions related to cadmium exposure that require further evaluation or treatment, and any limitation on the employee's diet or use of medications.

(ii) The employer shall promptly obtain a copy of the results of any biological monitoring provided by an employer to an employee independently of a medical examination under (b) and (d) of this subsection, and, in lieu of a written medical opinion, an explanation sheet explaining those results.

WAC 296-155-174 (Cont.)

(iii) The employer shall instruct the physician not to reveal orally or in the written medical opinion given to the employer specific findings or diagnoses unrelated to occupational exposure to cadmium.

(k) Medical removal protection (MRP).

(i) General.

(A) The employer shall temporarily remove an employee from work where there is excess exposure to cadmium on each occasion that medical removal is required under (c), (d), or (f) of this subsection and on each occasion that a physician determines in a written medical opinion that the employee should be removed from such exposure. The physician's determination may be based on biological monitoring results, inability to wear a respirator, evidence of illness, other signs or symptoms of cadmium-related dysfunction or disease, or any other reason deemed medically sufficient by the physician.

(B) The employer shall medically remove an employee in accordance with (k) of this subsection regardless of whether at the time of removal a job is available into which the removed employee may be transferred.

(C) Whenever an employee is medically removed under (k) of this subsection, the employer shall transfer the removed employee to a job where the exposure to cadmium is within the permissible levels specified in subsection (12) of this section as soon as one becomes available.

(D) For any employee who is medically removed under the provisions of (k)(i) of this subsection, the employer shall provide follow-up medical examinations semiannually until, in a written medical opinion, the examining physician determines that either the employee may be returned to his/her former job status or the employee must be permanently removed from excess cadmium exposure.

(E) The employer may not return an employee who has been medically removed for any reason to his/her former job status until a physician determines in a written medical opinion that continued medical removal is no longer necessary to protect the employee's health.

(ii) Where an employee is found unfit to wear a respirator under (f)(ii) of this subsection, the employer shall remove the employee from work where exposure to cadmium is above the PEL.

(iii) Where removal is based upon any reason other than the employee's inability to wear a respirator, the employer shall remove the employee from work where exposure to cadmium is at or above the action level.

(iv) Except as specified in (k)(v) of this subsection, no employee who was removed because his/her level of CdU, CdB and/or B_2-M exceeded the trigger levels in (c) or (d) of this subsection may be returned to work with exposure to cadmium at or above the action level until the employee's levels of CdU fall to or below 3 µg/g Cr, CdB fall to or below 5 µg/lwb, and B_2-M fall to or below 300 µg/g Cr.

WAC 296-155-174 (Cont.)

(v) However, when in the examining physician's opinion continued exposure to cadmium will not pose an increased risk to the employee's health and there are special circumstances that make continued medical removal an inappropriate remedy, the physician shall fully discuss these matters with the employee, and then in a written determination may return a worker to his/her former job status despite what would otherwise be unacceptably high biological monitoring results. Thereafter and until such time as the employee's biological monitoring results have decreased to levels where he/she could have been returned to his/her former job status, the returned employee shall continue medical surveillance as if he/she were still on medical removal. Until such time, the employee is no longer subject to mandatory medical removal. Subsequent questions regarding the employee's medical removal shall be decided solely by a final medical determination.

(vi) Where an employer, although not required by this section to do so, removes an employee from exposure to cadmium or otherwise places limitations on an employee due to the effects of cadmium exposure on the employee's medical condition, the employer shall provide the same medical removal protection benefits to that employee under (l) of this subsection as would have been provided had the removal been required under (k) of this subsection.

(l) Medical removal protection benefits.

(i) The employer shall provide medical removal protection benefits to an employee for up to a maximum of 18 months each time, and while the employee is temporarily medically removed under (k) of this subsection.

(ii) For purposes of this section, the requirement that the **employer provide medical removal protection benefits** means that the employer shall maintain the total normal earnings, seniority, and all other employee rights and benefits of the removed employee, including the employee's right to his/her former job status, as if the employee had not been removed from the employee's job or otherwise medically limited.

(iii) Where, after 18 months on medical removal because of elevated biological monitoring results, the employee's monitoring results have not declined to a low enough level to permit the employee to be returned to his/her former job status:

(A) The employer shall make available to the employee a medical examination pursuant to this section in order to obtain a final medical determination as to whether the employee may be returned to his/her former job status or must be permanently removed from excess cadmium exposure; and

(B) The employer shall assure that the final medical determination indicates whether the employee may be returned to his/her former job status and what steps, if any, should be taken to protect the employee's health.

(iv) The employer may condition the provision of medical removal protection benefits upon the employee's participation in medical surveillance provided in accordance with this section.

WAC 296-155-174 (Cont.)

(m) Multiple physician review.

(i) If the employer selects the initial physician to conduct any medical examination or consultation provided to an employee under this section, the employee may designate a second physician to:

(A) Review any findings, determinations, or recommendations of the initial physician; and

(B) Conduct such examinations, consultations, and laboratory tests as the second physician deems necessary to facilitate this review.

(ii) The employer shall promptly notify an employee of the right to seek a second medical opinion after each occasion that an initial physician provided by the employer conducts a medical examination or consultation pursuant to this section. The employer may condition its participation in, and payment for, multiple physician review upon the employee doing the following within fifteen (15) days after receipt of this notice, or receipt of the initial physician's written opinion, whichever is later:

(A) Informing the employer that he or she intends to seek a medical opinion; and

(B) Initiating steps to make an appointment with a second physician.

(iii) If the findings, determinations, or recommendations of the second physician differ from those of the initial physician, then the employer and the employee shall assure that efforts are made for the two physicians to resolve any disagreement.

(iv) If the two physicians have been unable to quickly resolve their disagreement, then the employer and the employee, through their respective physicians, shall designate a third physician to:

(A) Review any findings, determinations, or recommendations of the other two physicians; and

(B) Conduct such examinations, consultations, laboratory tests, and discussions with the other two physicians as the third physician deems necessary to resolve the disagreement among them.

(v) The employer shall act consistently with the findings, determinations, and recommendations of the third physician, unless the employer and the employee reach an agreement that is consistent with the recommendations of at least one of the other two physicians.

(n) Alternate physician determination. The employer and an employee or designated employee representative may agree upon the use of any alternate form of physician determination in lieu of the multiple physician review provided by (m) of this subsection, so long as the alternative is expeditious and at least as protective of the employee.

(o) Information the employer must provide the employee.

WAC 296-155-174 (Cont.)

(i) The employer shall provide a copy of the physician's written medical opinion to the examined employee within five working days after receipt thereof.

(ii) The employer shall provide the employee with a copy of the employee's biological monitoring results and an explanation sheet explaining the results within five working days after receipt thereof.

(iii) Within 30 days after a request by an employee, the employer shall provide the employee with the information the employer is required to provide the examining physician under (i) of this subsection.

(p) Reporting. In addition to other medical events that are required to be reported on the OSHA Form No. 200, the employer shall report any abnormal condition or disorder caused by occupational exposure to cadmium associated with employment as specified in Chapter (V)(E) of the Bureau of Labor Statistics Recordkeeping Guidelines for Occupational Injuries and Illnesses.

(13) Communication of cadmium hazards to employees

(a) General. In communications concerning cadmium hazards, employers shall comply with the requirements of WISHA's Hazard Communication Standard, chapter 296-62 WAC, Part C, including but not limited to the requirements concerning warning signs and labels, material safety data sheets (MSDS), and employee information and training. In addition, employers shall comply with the following requirements:

(b) Warning signs.

(i) Warning signs shall be provided and displayed in regulated areas. In addition, warning signs shall be posted at all approaches to regulated areas so that an employee may read the signs and take necessary protective steps before entering the area.

(ii) Warning signs required by (b)(i) of this subsection shall bear the following information:

Danger, Cadmium, Cancer Hazard, Can Cause Lung and Kidney Disease,
Authorized Personnel Only, Respirators Required in This Area

(iii) The employer shall assure that signs required by this section are illuminated, cleaned, and maintained as necessary so that the legend is readily visible.

(c) Warning labels.

(i) Shipping and storage containers containing cadmium, cadmium compounds, or cadmium contaminated clothing, equipment, waste, scrap, or debris shall bear appropriate warning labels, as specified in (c)(ii) of this subsection.

(ii) The warning labels shall include at least the following information:

Danger, Contains Cadmium, Cancer Hazard, Avoid Creating Dust,
Can Cause Lung and Kidney Disease

WAC 296-155-174 (Cont.)

(iii) Where feasible, installed cadmium products shall have a visible label or other indication that cadmium is present.

(d) Employee information and training.

(i) The employer shall institute a training program for all employees who are potentially exposed to cadmium, assure employee participation in the program, and maintain a record of the contents of such program.

(ii) Training shall be provided prior to or at the time of initial assignment to a job involving potential exposure to cadmium and at least annually thereafter.

(iii) The employer shall make the training program understandable to the employee and shall assure that each employee is informed of the following:

(A) The health hazards associated with cadmium exposure, with special attention to the information incorporated in WAC 296-62-07441, Appendix A;

(B) The quantity, location, manner of use, release, and storage of cadmium in the workplace and the specific nature of operations that could result in exposure to cadmium, especially exposures above the PEL;

(C) The engineering controls and work practices associated with the employee's job assignment;

(D) The measures employees can take to protect themselves from exposure to cadmium, including modification of such habits as smoking and personal hygiene, and specific procedures the employer has implemented to protect employees from exposure to cadmium such as appropriate work practices, emergency procedures, and the provision of personal protective equipment;

(E) The purpose, proper selection, fitting, proper use, and limitations of respirators and protective clothing;

(F) The purpose and a description of the medical surveillance program required by subsection (12) of this section;

(G) The contents of this section and its appendices; and

(H) The employee's rights of access to records under chapter 296-62 WAC, Part B.

(iv) Additional access to information and training program and materials.

(A) The employer shall make a copy of this section and its appendices readily available to all affected employees and shall provide a copy without cost if requested.

(B) Upon request, the employer shall provide to the director or authorized representative, all materials relating to the employee information and the training program.

WAC 296-155-174 (Cont.)

(e) Multi-employer workplace. In a multi-employer workplace, an employer who produces, uses, or stores cadmium in a manner that may expose employees of other employers to cadmium shall notify those employers of the potential hazard in accordance with WAC 296-800-170 of the chemical hazard communication program standard.

(14) Recordkeeping.

(a) Exposure monitoring.

(i) The employer shall establish and keep an accurate record of all air monitoring for cadmium in the workplace.

(ii) This record shall include at least the following information:

(A) The monitoring date, shift, duration, air volume, and results in terms of an 8-hour TWA of each sample taken, and if cadmium is not detected, the detection level;

(B) The name, Social Security number, and job classification of all employees monitored and of all other employees whose exposures the monitoring result is intended to represent, including, where applicable, a description of how it was determined that the employee's monitoring result could be taken to represent other employee's exposures;

(C) A description of the sampling and analytical methods used and evidence of their accuracy;

(D) The type of respiratory protective device, if any, worn by the monitored employee and by any other employee whose exposure the monitoring result is intended to represent;

(E) A notation of any other conditions that might have affected the monitoring results;

(F) Any exposure monitoring or objective data that were used and the levels.

(iii) The employer shall maintain this record for at least thirty (30) years, in accordance with WAC 296-62-05207.

(iv) The employer shall also provide a copy of the results of an employee's air monitoring prescribed in subsection (4) of this section to an industry trade association and to the employee's union, if any, or, if either of such associations or unions do not exist, to another comparable organization that is competent to maintain such records and is reasonably accessible to employers and employees in the industry.

(b) Objective data for exemption from requirement for initial monitoring.

(i) For purposes of this section, objective data are information demonstrating that a particular product or material containing cadmium or a specific process, operation, or activity involving cadmium cannot release dust or fumes in concentrations at or above

WAC 296-155-174 (Cont.)

the action level even under the worst-case release conditions. Objective data can be obtained from an industry-wide study or from laboratory product test results from manufacturers of cadmium-containing products or materials. The data the employer uses from an industry-wide survey must be obtained under workplace conditions closely resembling the processes, types of material, control methods, work practices, and environmental conditions in the employer's current operations.

(ii) The employer shall maintain the record for at least 30 years of the objective data relied upon.

(c) Medical surveillance.

(i) The employer shall establish and maintain an accurate record for each employee covered by medical surveillance under (a)(i) of this subsection.

(ii) The record shall include at least the following information about the employee:

(A) Name, Social Security number, and description of duties;

(B) A copy of the physician's written opinions and of the explanation sheets for biological monitoring results;

(C) A copy of the medical history, and the results of any physical examination and all test results that are required to be provided by this section, including biological tests, x-rays, pulmonary function tests, etc., or that have been obtained to further evaluate any condition that might be related to cadmium exposure;

(D) The employee's medical symptoms that might be related to exposure to cadmium; and

(E) A copy of the information provided to the physician as required by subsection (12)(i) of this section.

(iii) The employer shall assure that this record is maintained for the duration of employment plus thirty (30) years, in accordance with WAC 296-62-05207.

(iv) At the employee's request, the employer shall promptly provide a copy of the employee's medical record, or update as appropriate, to a medical doctor or a union specified by the employee.

(d) Training. The employer shall certify that employees have been trained by preparing a certification record which includes the identity of the person trained, the signature of the employer or the person who conducted the training, and the date the training was completed. The certification records shall be prepared at the completion of training and shall be maintained on file for one (1) year beyond the date of training of that employee.

WAC 296-155-174 (Cont.)

(e) Availability.

(i) Except as otherwise provided for in this section, access to all records required to be maintained by (a) through (d) of this subsection shall be in accordance with the provisions of WAC 296-62-052.

(ii) Within 15 days after a request, the employer shall make an employee's medical records required to be kept by (c) of this subsection available for examination and copying to the subject employee, to designated representatives, to anyone having the specific written consent of the subject employee, and after the employee's death or incapacitation, to the employee's family members.

(f) Transfer of records. Whenever an employer ceases to do business and there is no successor employer or designated organization to receive and retain records for the prescribed period, the employer shall comply with the requirements concerning transfer of records set forth in WAC 296-62-05215.

(15) Observation of monitoring.

(a) Employee observation. The employer shall provide affected employees or their designated representatives an opportunity to observe any monitoring of employee exposure to cadmium.

(b) Observation procedures. When observation of monitoring requires entry into an area where the use of protective clothing or equipment is required, the employer shall provide the observer with that clothing and equipment and shall assure that the observer uses such clothing and equipment and complies with all other applicable safety and health procedures.

(16) Appendices.

(a) Compliance with the fit testing requirements in WAC 296-62-07201 through 296-62-07248, Appendices A-1, A-2 and A-3 of chapter 296-62 WAC, Part E, are mandatory.

(b) Except where portions of WAC 296-62-07441, 296-62-07443, 296-62-07447, 296-62-07449, and 296-62-07451, Appendices A, B, D, E, and F, respectively, to this section are expressly incorporated in requirements of this section, these appendices are purely informational and are not intended to create any additional obligations not otherwise imposed or to detract from any existing obligations.

[Statutory Authority: RCW 49.17.010, .040, .050. 01-11-038 (Order 99-36), § 296-155-174, filed 05/09/01, effective 09/01/01. Statutory Authority: RCW 49.17.010, .040, .050. 99-10 (Order 98-10), § 296-155-174, filed 05/04/99, effective 09/01/99. Statutory Authority: Chapter 49.17 RCW. 94-15-096 (Order 94-07), § 296-155-174, filed 7/20/94, effective 9/20/94; 93-21-075 (Order 93-06), § 296-155-174, filed 10/20/93, effective 12/1/93; 93-07-044 (Order 93-01), § 296-155-174, filed 3/13/93, effective 4/27/93.]

WAC 296-155-176 Lead.

[Statutory Authority: Chapter 49.17 RCW. 93-22-054 (Order 93-07), § 296-155-176, filed 10/29/93, effective 12/10/93.]

WAC 296-155-17603 Scope. WAC 296-155-176, Lead, applies to all construction work where an employee may be occupationally exposed to lead. All construction work excluded from coverage in the general industry standard for lead by WAC 296-62-07521 (1)(b) is covered by this standard. Construction work is defined as work for construction, alteration and/or repair, including painting and decorating. It includes but is not limited to the following:

(1) Demolition or salvage of structures where lead or materials containing lead are present;

WAC 296-155-17603 (Cont.)

(2) Removal or encapsulation of materials containing lead;

(3) New construction, alteration, repair, or renovation of structures, substrates, or portions thereof, that contain lead, or materials containing lead;

(4) Installation of products containing lead;

(5) Lead contamination/emergency cleanup;

(6) Transportation, disposal, storage, or containment of lead or materials containing lead on the site or location at which construction activities are performed; and

(7) Maintenance operations associated with the construction activities described in this section.

[Statutory Authority: Chapter 49.17 RCW. 93-22-054 (Order 93-07), § 296-155-17603, filed 10/29/93, effective 12/10/93.]

WAC 296-155-17605 Definitions.

(1) **Action level** means employee exposure, without regard to the use of respirators, to an airborne concentration of lead of 30 micrograms per cubic meter of air (30 $\mu g/m^3$) calculated as an 8-hour time-weighted average (TWA).

(2) **Competent person** means one who is capable of identifying existing and predictable lead hazards in the surroundings or working conditions and who has authorization to take prompt corrective measures to eliminate them.

(3) **Director** means the director of labor and industries, or his/her designated representative.

(4) **Lead** means metallic lead, all inorganic lead compounds, and organic lead soaps. Excluded from this definition are all other organic lead compounds.

(5) **This section** means WAC 296-155-176 through 296-155-17656.

[Statutory Authority: Chapter 49.17 RCW. 93-22-054 (Order 93-07), § 296-155-17605, filed 10/29/93, effective 12/10/93.]

WAC 296-155-17607 Permissible exposure limit.

(1) The employer shall assure that no employee is exposed to lead at concentrations greater than fifty micrograms per cubic meter of air (50 $\mu g/m^3$) averaged over an 8-hour period.

(2) If an employee is exposed to lead for more than 8 hours in any work day the employees' allowable exposure, as a time weighted average (TWA) for that day, shall be reduced according to the following formula:

Allowable employee exposure (in $\mu g/m^3$)=400 divided by hours worked in the day.

(3) When respirators are used to limit employee exposure as required by this section and all the requirements of WAC 296-155-17611(1) and 296-155-17613 have been met, employee exposure may be considered to be at the level provided by the protection factor of the respirator for those periods the respirator is worn. Those periods may be averaged with exposure levels during periods when respirators are not worn to determine the employee's daily TWA exposure.

[Statutory Authority: Chapter 49.17 RCW. 93-22-054 (Order 93-07), § 296-155-17607, filed 10/29/93, effective 12/10/93.]

WAC 296-155-17609 Exposure assessment.

(1) General.

(a) Each employer who has a workplace or operation covered by this standard shall initially determine if any employee may be exposed to lead at or above the action level.

(b) For the purposes of this section, employee exposure is that exposure which would occur if the employee were not using a respirator.

(c) With the exception of monitoring under subsection (3) of this section, where monitoring is required by this standard, the employer shall collect personal samples representative of a full shift including at least one sample for each job classification in each work area either for each shift or for the shift with the highest exposure level.

(d) Full shift personal samples shall be representative of the monitored employee's regular, daily exposure to lead.

(2) Protection of employees during assessment of exposure.

(a) With respect to the lead related tasks listed in this subdivision, where lead is present, until the employer performs an employee exposure assessment as required in this section and documents that the employee performing any of the listed tasks is not exposed above the PEL, the employer shall treat the employee as if the employee were exposed above the PEL, and not in excess of ten (10) times the PEL, and shall implement employee protective measures prescribed in subdivision (e) of this subsection. The tasks covered by this requirement are:

(i) Where lead containing coatings or paint are present: Manual demolition of structures (e.g, dry wall), manual scraping, manual sanding, heat gun applications, and power tool cleaning with dust collection systems;

(ii) Spray painting with lead paint.

(b) In addition, with regard to tasks not listed in subdivision (a), where the employer has any reason to believe that an employee performing the task may be exposed to lead in excess of the PEL, until the employer performs an employee exposure assessment as required by this section and documents that the employee's lead exposure is not above the PEL the employer shall treat the employee as if the employee were exposed above the PEL and shall implement employee protective measures as prescribed in subdivision (e) of this subsection.

(c) With respect to the tasks listed in this subdivision, where lead is present, until the employer performs an employee exposure assessment as required in this section, and documents that the employee performing any of the listed tasks is not exposed in excess of 500 $\mu g/m^3$, the employer shall treat the employee as if the employee were exposed to lead in excess of 500 $\mu g/m^3$ and shall implement employee protective measures as prescribed in subdivision (e) of this subsection. Where the employer does establish that the employee is exposed to levels of lead below 500 $\mu g/m^3$, the employer may provide the exposed employee with the appropriate respirator prescribed for such use at such lower exposures, in accordance with Table I of WAC 296-155-17613. The tasks covered by this requirement are:

WAC 296-155-17609 (Cont.)

(i) Using lead containing mortar; lead burning;

(ii) Where lead containing coatings or paint are present: Rivet busting; power tool cleaning without dust collection systems; cleanup activities where dry expendable abrasives are used; and abrasive blasting enclosure movement and removal.

(d) With respect to the tasks listed in this subdivision, where lead is present, until the employer performs an employee exposure assessment as required in this section and documents that the employee performing any of the listed tasks is not exposed to lead in excess of 2,500 $\mu g/m^3$ (50xPEL), the employer shall treat the employee as if the employee were exposed to lead in excess of 2,500 $\mu g/m^3$ and shall implement employee protective measures as prescribed in (e) of this subsection. Where the employer does establish that the employee is exposed to levels of lead below 2,500 $\mu g/m^3$, the employer may provide the exposed employee with the appropriate respirator prescribed for use at such lower exposures, in accordance with Table I of this WAC 296-155-17613. Protection described in this section is required where lead containing coatings or paint are present on structures when performing:

(i) Abrasive blasting;

(ii) Welding;

(iii) Cutting; and

(iv) Torch burning.

(e) Until the employer performs an employee exposure assessment as required by this section and determines actual employee exposure, the employer shall provide to employees performing the tasks described in (a) through (d) of this subsection with interim protection as follows:

(i) Appropriate respiratory protection in accordance with WAC 296-155-17613.

(ii) Appropriate personal protective clothing and equipment in accordance with WAC 296-155-17615.

(iii) Change areas in accordance with WAC 296-155-17619(2).

(iv) Hand washing facilities in accordance with WAC 296-155-17619(5).

(v) Biological monitoring in accordance with WAC 296-155-17621 (1)(a), to consist of blood sampling and analysis for lead and zinc protoporphyrin levels, and

(vi) Training as required by WAC 296-155-17625 (1)(a) regarding WAC 296-800-170, chemical hazard communication; training as required by WAC 296-155-17625 (2)(c), regarding use of respirators; and training in accordance with WAC 296-155-100.

(3) Basis of initial determination.

(a) Except as provided by (c) and (d) of this subsection the employer shall monitor employee exposures and shall base initial determinations on the employee exposure monitoring results and any of the following, relevant considerations:

WAC 296-155-17609 (Cont.)

(i) Any information, observations, or calculations which would indicate employee exposure to lead;

(ii) Any previous measurements of airborne lead; and

(iii) Any employee complaints of symptoms which may be attributable to exposure to lead.

(b) Monitoring for the initial determination where performed may be limited to a representative sample of the exposed employees who the employer reasonably believes are exposed to the greatest airborne concentrations of lead in the workplace.

(c) Where the employer has previously monitored for lead exposures, and the data were obtained within the past 12 months during work operations conducted under workplace conditions closely resembling the processes, type of material, control methods, work practices, and environmental conditions used and prevailing in the employer's current operations, the employer may rely on such earlier monitoring results to satisfy the requirements of subdivision (a) of this subsection and subsection (5) of this section if the sampling and analytical methods meet the accuracy and confidence levels of subsection (9) of this section.

(d) Where the employer has objective data, demonstrating that a particular product or material containing lead or a specific process, operation or activity involving lead cannot result in employee exposure to lead at or above the action level during processing, use, or handling, the employer may rely upon such data instead of implementing initial monitoring.

(i) The employer shall establish and maintain an accurate record documenting the nature and relevancy of objective data as specified in WAC 296-155-17629(4), where used in assessing employee exposure in lieu of exposure monitoring.

(ii) Objective data, as described in subdivision (d) of this subsection, is not permitted to be used for exposure assessment in connection with subsection (2) of this section.

(4) Positive initial determination and initial monitoring.

(a) Where a determination conducted under subsections (1), (2) and (3) of this section shows the possibility of any employee exposure at or above the action level the employer shall conduct monitoring which is representative of the exposure for each employee in the workplace who is exposed to lead.

(b) Where the employer has previously monitored for lead exposure, and the data were obtained within the past 12 months during work operations conducted under workplace conditions closely resembling the processes, type of material, control methods, work practices, and environmental conditions used and prevailing in the employer's current operations, the employer may rely on such earlier monitoring results to satisfy the requirements of (a) of this subsection if the sampling and analytical methods meet the accuracy and confidence levels of subsection (9) of this section.

(5) Negative initial determination. Where a determination, conducted under subsections (1), (2), and (3) of this section is made that no employee is exposed to airborne concentrations of lead at or above the action level the employer shall make a written record of such determination. The record shall include at least

WAC 296-155-17609 (Cont.)

the information specified in subsection (3)(a) of this section and shall also include the date of determination, location within the worksite, and the name and social security number of each employee monitored.

(6) Frequency.

(a) If the initial determination reveals employee exposure to be below the action level further exposure determination need not be repeated except as otherwise provided in subsection (7) of this section.

(b) If the initial determination or subsequent determination reveals employee exposure to be at or above the action level but at or below the PEL the employer shall perform monitoring in accordance with this section at least every 6 months. The employer shall continue monitoring at the required frequency until at least two consecutive measurements, taken at least 7 days apart, are below the action level at which time the employer may discontinue monitoring for that employee except as otherwise provided in subsection (7) of this section.

(c) If the initial determination reveals that employee exposure is above the PEL the employer shall perform monitoring quarterly. The employer shall continue monitoring at the required frequency until at least two consecutive measurements, taken at least 7 days apart, are at or below the PEL but at or above the action level at which time the employer shall repeat monitoring for that employee at the frequency specified in subdivision (b) of this subsection, except as otherwise provided in subsection (7) of this section. The employer shall continue monitoring at the required frequency until at least two consecutive measurements, taken at least 7 days apart, are below the action level at which time the employer may discontinue monitoring for that employee except as otherwise provided in subsection (7) of this section.

(7) Additional exposure assessments. Whenever there has been a change of equipment, process, control, personnel or a new task has been initiated that may result in additional employees being exposed to lead at or above the action level or may result in employees already exposed at or above the action level being exposed above the PEL, the employer shall conduct additional monitoring in accordance with this section.

(8) Employee notification.

(a) Within 5 working days after completion of the exposure assessment the employer shall notify each employee in writing of the results which represent that employee's exposure.

(b) Whenever the results indicate that the representative employee exposure, without regard to respirators, is at or above the PEL the employer shall include in the written notice a statement that the employees exposure was at or above that level and a description of the corrective action taken or to be taken to reduce exposure to below that level.

(9) Accuracy of measurement. The employer shall use a method of monitoring and analysis which has an accuracy (to a confidence level of 95%) of not less than plus or minus 25 percent for airborne concentrations of lead equal to or greater than 30 $\mu g/m^3$.

[Statutory Authority: RCW 49.17.010, .040, .050. 01-11-038 (Order 99-36), § 296-155-17609, filed 05/09/01, effective 09/01/01. Statutory Authority: Chapter 49.17 RCW. 93-22-054 (Order 93-07), § 296-155-17609, filed 10/29/93, effective 12/10/93.]

WAC 296-155-17611 Methods of compliance.

(1) Engineering and work practice controls. The employer shall implement engineering and work practice controls, including administrative controls, to reduce and maintain employee exposure to lead to or below the permissible exposure limit to the extent that such controls are feasible. Wherever all feasible engineering and work practices controls that can be instituted are not sufficient to reduce employee exposure to or below the permissible exposure limit prescribed in WAC 296-155-17607, the employer shall nonetheless use them to reduce employee exposure to the lowest feasible level and shall supplement them by the use of respiratory protection that complies with the requirements of WAC 296-155-17613.

(2) Compliance program.

(a) Prior to commencement of the job each employer shall establish and implement a written compliance program to achieve compliance with WAC 296-155-17607.

(b) Written plans for these compliance programs shall include at least the following:

(i) A description of each activity in which lead is emitted; e.g., equipment used, material involved, controls in place, crew size, employee job responsibilities, operating procedures and maintenance practices;

(ii) A description of the specific means that will be employed to achieve compliance and, where engineering controls are required engineering plans and studies used to determine methods selected for controlling exposure to lead;

(iii) A report of the technology considered in meeting the PEL;

(iv) Air monitoring data which documents the source of lead emissions;

(v) A detailed schedule for implementation of the program, including documentation such as copies of purchase orders for equipment, construction contracts, etc.;

(vi) A work practice program which includes under requirements in WAC 296-155-17615, 296-155-17617, and 296-155-17619, and incorporates other relevant work practices such as those specified in subsection (5) of this section;

(vii) An administrative control schedule required by subsection (4) of this section, if applicable;

(viii) Other relevant information.

(c) The compliance program shall provide for frequent and regular inspections of job sites, materials, and equipment to be made by a competent person.

(d) Written programs shall be submitted upon request to any affected employee or authorized employee representatives, and the director, and shall be available at the worksite for examination and copying by the director.

(e) Written programs shall be revised and updated at least every 6 months to reflect the current status of the program.

WAC 296-155-17611 (Cont.)

(3) Mechanical ventilation. When ventilation is used to control lead exposure, the employer shall evaluate the mechanical performance of the system in controlling exposure as necessary to maintain its effectiveness.

(4) Administrative controls. If administrative controls are used as a means of reducing employees TWA exposure to lead, the employer shall establish and implement a job rotation schedule which includes:

(a) Name or identification number of each affected employee;

(b) Duration and exposure levels at each job or work station where each affected employee is located; and

(c) Any other information which may be useful in assessing the reliability of administrative controls to reduce exposure to lead.

(5) The employer shall ensure that, to the extent relevant, employees follow good work practices such as described in Appendix B, WAC 296-155-17652.

[Statutory Authority: Chapter 49.17 RCW. 93-22-054 (Order 93-07), § 296-155-17611, filed 10/29/93, effective 12/10/93.]

WAC 296-155-17613 Respiratory protection.

(1) General. For employees who use respirators required by WAC 296-155-176, the employer must provide respirators that comply with the requirements of this section. Respirators must be used during:

(a) Periods when an employee's exposure to lead exceeds the PEL.

(b) Work operations for which engineering controls and work-practices are not sufficient to reduce employee exposures to or below the PEL.

(c) Periods when an employee requests a respirator.

(d) Periods when respirators are required to provide interim protection of employees while they perform the operations as specified in WAC 296-155-17609(2).

(2) Respirator program.

(a) The employer must implement a respiratory protection program as required by chapter 296-62 WAC, Part E (except WAC 296-62-07130(1) and 296-62-07150 through WAC 296-62-07156).

(b) If an employee has breathing difficulty during fit testing or respirator use, the employer must provide the employee with a medical examination as required by WAC 296-155-17621(3)(a)(ii) to determine whether or not the employee can use a respirator while performing the required duty.

(3) Respirator selection.

(a) The employer must select the appropriate respirator or combination of respirators from Table I of this section.

(b) The employer must provide a powered air-purifying respirator when an employee chooses to use such a respirator and it will provide adequate protection to the employee.

WAC 296-155-17613 (Cont.)

Table I.--Respiratory Protection for Lead Aerosols

Airborne Concentration of Lead or condition of use	Required respirator[a]
Not in excess of 500 μg/m^3	½ mask air purifying respirator with high efficiency filters.[b, c] ½ mask supplied air respirator operated in demand (negative pressure) mode.
Not in excess of 1,250 μg/m^3	Loose fitting hood or helmet powered air purifying respirator with high efficiency filters.[c] Hood or helmet supplied air respirator operated in a continuous-flow mode-e.g., type CE abrasive blasting respirators operated in a continuous-flow mode.
Not in excess of 2,500 μg/m^3	Full facepiece air purifying respirator with high efficiency filters.[c] Tight fitting powered air purifying respirator with high efficiency filters.[c] Full facepiece supplied air respirator operated in demand mode. ½ mask or full facepiece supplied air respirator operated in a continuous-flow mode. Full facepiece self-contained breathing apparatus (SCBA) operated in demand mode.
Not in excess of 50,000 μg/m^3	½ mask supplied air respirator operated in pressure demand or other positive-pressure mode.
Not in excess of 100,000 μg/m^3	Full facepiece supplied air respirator operated in pressure demand or other positive-pressure mode-e.g., type CE abrasive blasting respirators operated in a positive-pressure mode.
Greater than 100,000 μg/m^3 Unknown concentration, or fire fighting	Full facepiece SCBA operated in pressure demand or other or positive pressure mode.

[a] Respirators specified for higher concentrations can be used at lower concentrations of lead.
[b] Full facepiece is required if the lead aerosols cause eye or skin irritation at the use concentrations.
[c] A high efficiency particulate filter (HEPA) means a filter that is 99.97 percent efficient against particles of 0.3 micron size or larger.

[Statutory Authority: RCW 49.17.010, .040, .050. 99-10 (Order 98-10), § 296-155-17613, filed 05/04/99, effective 09/01/99. Statutory Authority: Chapter 49.17 RCW. 93-22-054 (Order 93-07), § 296-155-17613, filed 10/29/93, effective 12/10/93.]

WAC 296-155-17615 Protective work clothing and equipment.

(1) Provision and use. Where an employee is exposed to lead above the PEL without regard to the use of respirators, where employees are exposed to lead compounds which may cause skin or eye irritation (e.g., lead arsenate, lead azide), and as protection for employees performing tasks as specified in WAC 296-155-17609(2), the employer shall provide at no cost to the employee and assure that the employee uses appropriate protective work clothing and equipment that prevents contamination of the employee and the employee's garments such as, but not limited to:

(a) Coveralls or similar full-body work clothing;

(b) Gloves, hats, and shoes or disposable shoe coverlets; and

(c) Face shields, vented goggles, or other appropriate protective equipment which complies with WAC 296-800-160.

WAC 296-155-17615 (Cont.)

(2) Cleaning and replacement.

(a) The employer shall provide the protective clothing required in subsection (1) of this section in a clean and dry condition at least weekly, and daily to employees whose exposure levels without regard to a respirator are over 200 $\mu g/m^3$ of lead as an 8-hour TWA.

(b) The employer shall provide for the cleaning, laundering, and disposal of protective clothing and equipment required by subsection (1) of this section.

(c) The employer shall repair or replace required protective clothing and equipment as needed to maintain their effectiveness.

(d) The employer shall assure that all protective clothing is removed at the completion of a work shift only in change areas provided for that purpose as prescribed in WAC 296-155-17619(2).

(e) The employer shall assure that contaminated protective clothing which is to be cleaned, laundered, or disposed of, is placed in a closed container in the change area which prevents dispersion of lead outside the container.

(f) The employer shall inform in writing any person who cleans or launders protective clothing or equipment of the potentially harmful effects of exposure to lead.

(g) The employer shall assure that the containers of contaminated protective clothing and equipment required by subdivision (e) of this subsection are labeled as follows:

Caution: Clothing contaminated with lead. Do not remove dust by blowing or shaking. Dispose of lead contaminated wash water in accordance with applicable local, state, or federal regulations.

(h) The employer shall prohibit the removal of lead from protective clothing or equipment by blowing, shaking, or any other means which disperses lead into the air.

[Statutory Authority: RCW 49.17.010, .040, .050. 01-11-038 (Order 99-36), § 296-155-120, filed 05/09/01, effective 09/01/01.
Statutory Authority: Chapter 49.17 RCW. 93-22-054 (Order 93-07), § 296-155-17615, filed 10/29/93, effective 12/10/93.]

WAC 296-155-17617 Housekeeping.

(1) All surfaces shall be maintained as free as practicable of accumulations of lead.

(2) Clean-up of floors and other surfaces where lead accumulates shall wherever possible, be cleaned by vacuuming or other methods that minimize the likelihood of lead becoming airborne.

(3) Shoveling, dry or wet sweeping, and brushing may be used only where vacuuming or other equally effective methods have been tried and found not to be effective.

(4) Where vacuuming methods are selected, the vacuums shall be equipped with HEPA filters and used and emptied in a manner which minimizes the reentry of lead into the workplace.

(5) Compressed air shall not be used to remove lead from any surface unless the compressed air is used in conjunction with a ventilation system designed to capture the airborne dust created by the compressed air.

[Statutory Authority: Chapter 49.17 RCW. 93-22-054 (Order 93-07), § 296-155-17617, filed 10/29/93, effective 12/10/93.]

WAC 296-155-17619 Hygiene facilities and practices.

(1) The employer shall assure that in areas where employees are exposed to lead above the PEL without regard to the use of respirators, food or beverage is not present or consumed, tobacco products are not present or used, and cosmetics are not applied.

(2) Change areas.

(a) The employer shall provide clean change areas for employees whose airborne exposure to lead is above the PEL, and as protection for employees performing tasks as specified in WAC 296-155-17609(2), without regard to the use of respirators.

(b) The employer shall assure that change areas are equipped with separate storage facilities for protective work clothing and equipment and for street clothes which prevent cross-contamination.

(c) The employer shall assure that employees do not leave the workplace wearing any protective clothing or equipment that is required to be worn during the work shift.

(3) Showers.

(a) The employer shall provide shower facilities, where feasible, for use by employees whose airborne exposure to lead is above the PEL.

(b) The employer shall assure, where shower facilities are available, that employees shower at the end of the work shift and shall provide an adequate supply of cleansing agents and towels for use by affected employees.

(4) Eating facilities.

(a) The employer shall provide lunchroom facilities or eating areas for employees whose airborne exposure to lead is above the PEL, without regard to the use of respirators.

(b) The employer shall assure that lunchroom facilities or eating areas are as free as practicable from lead contamination and are readily accessible to employees.

(c) The employer shall assure that employees whose airborne exposure to lead is above the PEL, without regard to the use of a respirator, wash their hands and face prior to eating, drinking, smoking or applying cosmetics.

(d) The employer shall assure that employees do not enter lunchroom facilities or eating areas with protective work clothing or equipment unless surface lead dust has been removed by vacuuming, downdraft booth, or other cleaning method that limits dispersion of lead dust.

(5) Hand washing facilities.

(a) The employer shall provide adequate handwashing facilities for use by employees exposed to lead in accordance with WAC 296-155-140.

(b) Where showers are not provided the employer shall assure that employees wash their hands and face at the end of the work-shift.

[Statutory Authority: Chapter 49.17 RCW. 93-22-054 (Order 93-07), § 296-155-17619, filed 10/29/93, effective 12/10/93.]

WAC 296-155-17621 Medical surveillance.

(1) General.

(a) The employer shall make available initial medical surveillance to employees occupationally exposed on any day to lead at or above the action level. Initial medical surveillance consists of biological monitoring in the form of blood sampling and analysis for lead and zinc protoporphyrin levels.

(b) The employer shall institute a medical surveillance program in accordance with subsections (2) and (3) of this section for all employees who are or may be exposed by the employer at or above the action level for more than 30 days in any consecutive 12 months;

(c) The employer shall assure that all medical examinations and procedures are performed by or under the supervision of a licensed physician.

(d) The employer shall make available the required medical surveillance including multiple physician review under subsection (3)(c) without cost to employees and at a reasonable time and place.

(2) Biological monitoring.

(a) Blood lead and ZPP level sampling and analysis. The employer shall make available biological monitoring in the form of blood sampling and analysis for lead and zinc protoporphyrin levels to each employee covered by subsection (1)(a) and (b) of this section on the following schedule:

(i) For each employee covered by subsection (1)(b) of this section, at least every 2 months for the first 6 months and every 6 months thereafter;

(ii) For each employee covered by subsection (1)(a) or (b) of this section whose last blood sampling and analysis indicated a blood lead level at or above 40 μg/dl, at least every two months. This frequency shall continue until two consecutive blood samples and analyses indicate a blood lead level below 40 μg/dl; and

(iii) For each employee who is removed from exposure to lead due to an elevated blood lead level at least monthly during the removal period.

(b) Follow-up blood sampling tests. Whenever the results of a blood lead level test indicate that an employee's blood lead level exceeds the numerical criterion for medical removal under WAC 296-155-17623 (1)(a), the employer shall provide a second (follow-up) blood sampling test within two weeks after the employer receives the results of the first blood sampling test.

(c) Accuracy of blood lead level sampling and analysis. Blood lead level sampling and analysis provided pursuant to this WAC 296-155-176 shall have an accuracy (to a confidence level of 95 percent) within plus or minus 15 percent or 6 μg/dl, whichever is greater, and shall be conducted by a laboratory approved by OSHA.

(d) Employee notification.

(i) Within five working days after the receipt of biological monitoring results, the employer shall notify each employee in writing of their blood lead level; and

WAC 296-155-17621 (Cont.)

(ii) The employer shall notify each employee whose blood lead level exceeds 40 µg/dl that the standard requires temporary medical removal with Medical Removal Protection benefits when an employee's blood lead level exceeds the numerical criterion for medical removal under WAC 296-155-17623(1)(a).

(3) Medical examinations and consultations.

(a) Frequency. The employer shall make available medical examinations and consultations to each employee covered by subsection (1)(b) of this section on the following schedule:

(i) At least annually for each employee for whom a blood sampling test conducted at any time during the preceding 12 months indicated a blood lead level at or above 40 µg/dl;

(ii) As soon as possible, upon notification by an employee either that the employee has developed signs or symptoms commonly associated with lead intoxication, that the employee desires medical advice concerning the effects of current or past exposure to lead on the employee's ability to procreate a healthy child, that the employee is pregnant, or that the employee has demonstrated difficulty in breathing during a respirator fitting test or during use; and

(iii) As medically appropriate for each employee either removed from exposure to lead due to a risk of sustaining material impairment to health, or otherwise limited pursuant to a final medical determination.

(b) Content. The content of medical examinations made available pursuant to subdivision (a)(ii) and (iii) of this subsection shall be determined by an examining physician and, if requested by an employee, shall include pregnancy testing or laboratory evaluation of male fertility. Medical examinations made available pursuant to subdivision (a)(i) of this subsection shall include the following elements:

(i) A detailed work history and a medical history, with particular attention to past lead exposure (occupational and non-occupational), personal habits (smoking, hygiene), and past gastrointestinal, hematologic, renal, cardiovascular, reproductive and neurological problems;

(ii) A thorough physical examination, with particular attention to teeth, gums, hematologic, gastrointestinal, renal, cardiovascular, and neurological systems. Pulmonary status should be evaluated if respiratory protection will be used;

(iii) A blood pressure measurement;

(iv) A blood sample and analysis which determines:

(A) Blood lead level;

(B) Hemoglobin and hematocrit determinations, red cell indices, and examination of peripheral smear morphology;

(C) Zinc protoporphyrin;

WAC 296-155-17621 (Cont.)

(D) Blood urea nitrogen; and,

(E) Serum creatinine;

(v) A routine urinalysis with microscopic examination; and

(vi) Any laboratory or other test relevant to lead exposure which the examining physician deems necessary by sound medical practice.

(c) Multiple physician review mechanism.

(i) If the employer selects the initial physician who conducts any medical examination or consultation provided to an employee by WAC 296-155-176, the employee may designate a second physician:

(A) To review any findings, determinations or recommendations of the initial physician; and

(B) To conduct such examinations, consultations, and laboratory tests as the second physician deems necessary to facilitate this review.

(ii) The employer shall promptly notify an employee of the right to seek a second medical opinion after each occasion that an initial physician conducts a medical examination or consultation pursuant to WAC 296-155-176. The employer may condition its participation in, and payment for, the multiple physician review mechanism upon the employee doing the following within fifteen days after receipt of the foregoing notification, or receipt of the initial physician's written opinion, whichever is later:

(A) The employee informing the employer that they intend to seek a second medical opinion; and

(B) The employee initiating steps to make an appointment with a second physician.

(iii) If the findings, determinations or recommendations of the second physician differ from those of the initial physician, then the employer and the employee shall assure that efforts are made for the two physicians to resolve any disagreement.

(iv) If the two physicians have been unable to quickly resolve their disagreement, then the employer and the employee through their respective physicians shall designate a third physician:

(A) To review any findings, determinations or recommendations of the prior physicians; and

(B) To conduct such examinations, consultations, laboratory tests and discussions with the prior physicians as the third physician deems necessary to resolve the disagreement of the prior physicians.

WAC 296-155-17621 (Cont.)

(v) The employer shall act consistent with the findings, determinations and recommendations of the third physician, unless the employer and the employee reach an agreement which is otherwise consistent with the recommendations of at least one of the three physicians.

(d) Information provided to examining and consulting physicians.

(i) The employer shall provide an initial physician conducting a medical examination or consultation under WAC 296-155-176 with the following information:

(A) A copy of this regulation for lead including all Appendices;

(B) A description of the affected employee's duties as they relate to the employee's exposure;

(C) The employee's exposure level or anticipated exposure level to lead and to any other toxic substance (if applicable);

(D) A description of any personal protective equipment used or to be used;

(E) Prior blood lead determinations; and

(F) All prior written medical opinions concerning the employee in the employer's possession or control.

(ii) The employer shall provide the foregoing information to a second or third physician conducting a medical examination or consultation under WAC 296-155-176 upon request either by the second or third physician, or by the employee.

(e) Written medical opinions.

(i) The employer shall obtain and furnish the employee with a copy of a written medical opinion from each examining or consulting physician which contains only the following information:

(A) The physician's opinion as to whether the employee has any detected medical condition which would place the employee at increased risk of material impairment of the employee's health from exposure to lead;

(B) Any recommended special protective measures to be provided to the employee, or limitations to be placed upon the employee's exposure to lead;

(C) Any recommended limitation upon the employee's use of respirators, including a determination of whether the employee can wear a powered air purifying respirator if a physician determines that the employee cannot wear a negative pressure respirator; and

(D) The results of the blood lead determinations.

WAC 296-155-17621 (Cont.)

(ii) The employer shall instruct each examining and consulting physician to:

(A) Not reveal either in the written opinion or orally, or in any other means of communication with the employer, findings, including laboratory results, or diagnoses unrelated to an employee's occupational exposure to lead; and

(B) Advise the employee of any medical condition, occupational or nonoccupational, which dictates further medical examination or treatment.

(f) Alternate physician determination mechanisms. The employer and an employee or authorized employee representative may agree upon the use of any alternate physician determination mechanism in lieu of the multiple physician review mechanism provided by subdivision (c) of this subsection so long as the alternate mechanism is as expeditious and protective as the requirements contained in this section.

(4) Chelation.

(a) The employer shall assure that any person whom he retains, employs, supervises or controls does not engage in prophylactic chelation of any employee at any time.

(b) If therapeutic or diagnostic chelation is to be performed by any person in subdivision (a) of this subsection, the employer shall assure that it be done under the supervision of a licensed physician in a clinical setting with thorough and appropriate medical monitoring and that the employee is notified in writing prior to its occurrence.

[Statutory Authority: Chapter 49.17 RCW. 93-22-054 (Order 93-07), § 296-155-17621, filed 10/29/93, effective 12/10/93.]

WAC 296-155-17623 Medical removal protection.

(1) Temporary medical removal and return of an employee.

(a) Temporary removal due to elevated blood lead level. The employer shall remove an employee from work having an exposure to lead at or above the action level on each occasion that a periodic and a follow-up blood sampling test conducted pursuant to WAC 296-155-176 indicate that the employee's blood lead level is at or above 50 µg/dl; and

(b) Temporary removal due to a final medical determination.

(i) The employer shall remove an employee from work having an exposure to lead at or above the action level on each occasion that a final medical determination results in a medical finding, determination, or opinion that the employee has a detected medical condition which places the employee at increased risk of material impairment to health from exposure to lead.

(ii) For the purposes of WAC 296-155-176, the phrase **"final medical determination"** means the written medical opinion on the employees' health status by the examining physician or, where relevant, the outcome of the multiple physician review mechanism or alternate medical determination mechanism used pursuant to the medical surveillance provisions of WAC 296-155-176.

WAC 296-155-17623 (Cont.)

(iii) Where a final medical determination results in any recommended special protective measures for an employee, or limitations on an employee's exposure to lead, the employer shall implement and act consistent with the recommendation.

(c) Return of the employee to former job status.

(i) The employer shall return an employee to their former job status:

(A) For an employee removed due to a blood lead level at or above 50 µg/dl when two consecutive blood sampling tests indicate that the employee's blood lead level is at or below 40 µg/dl;

(B) For an employee removed due to a final medical determination, when a subsequent final medical determination results in a medical finding, determination, or opinion that the employee no longer has a detected medical condition which places the employee at increased risk of material impairment to health from exposure to lead.

(ii) For the purposes of WAC 296-155-176, the requirement that an employer return an employee to their former job status is not intended to expand upon or restrict any rights an employee has or would have had, absent temporary medical removal, to a specific job classification or position under the terms of a collective bargaining agreement.

(d) Removal of other employee special protective measure or limitations. The employer shall remove any limitations placed on an employee or end any special protective measures provided to an employee pursuant to a final medical determination when a subsequent final medical determination indicates that the limitations or special protective measures are no longer necessary.

(e) Employer options pending a final medical determination. Where the multiple physician review mechanism, or alternate medical determination mechanism used pursuant to the medical surveillance provisions of WAC 296-155-176, has not yet resulted in a final medical determination with respect to an employee, the employer shall act as follows:

(i) Removal. The employer may remove the employee from exposure to lead, provide special protective measures to the employee, or place limitations upon the employee, consistent with the medical findings, determinations, or recommendations of any of the physicians who have reviewed the employee's health status.

(ii) Return. The employer may return the employee to their former job status, end any special protective measures provided to the employee, and remove any limitations placed upon the employee, consistent with the medical findings, determinations, or recommendations of any of the physicians who have reviewed the employee's health status, with two exceptions.

(A) If the initial removal, special protection, or limitation of the employee resulted from a final medical determination which differed from the findings, determinations, or recommendations of the initial physician or;

WAC 296-155-17623 (Cont.)

(B) If the employee has been on removal status for the preceding eighteen months due to an elevated blood lead level, then the employer shall await a final medical determination.

(2) Medical removal protection benefits.

(a) Provision of medical removal protection benefits. The employer shall provide an employee up to eighteen (18) months of medical removal protection benefits on each occasion that an employee is removed from exposure to lead or otherwise limited pursuant to WAC 296-155-176.

(b) Definition of medical removal protection benefits. For the purposes of WAC 296-155-176, the requirement that an **employer provide medical removal protection benefits** means that, as long as the job the employee was removed from continues, the employer shall maintain the total normal earnings, seniority and other employment rights and benefits of an employee, including the employee's right to their former job status as though the employee had not been medically removed from the employee's job or otherwise medically limited.

(c) Follow-up medical surveillance during the period of employee removal or limitation. During the period of time that an employee is medically removed from their job or otherwise medically limited, the employer may condition the provision of medical removal protection benefits upon the employee's participation in follow-up medical surveillance made available pursuant to WAC 296-155-176.

(d) Workers' compensation claims. If a removed employee files a claim for workers' compensation payments for a lead-related disability, then the employer shall continue to provide medical removal protection benefits pending disposition of the claim. To the extent that an award is made to the employee for earnings lost during the period of removal, the employer's medical removal protection obligation shall be reduced by such amount. The employer shall receive no credit for workers' compensation payments received by the employee for treatment-related expenses.

(e) Other credits. The employer's obligation to provide medical removal protection benefits to a removed employee shall be reduced to the extent that the employee receives compensation for earnings lost during the period of removal either from a publicly or employer-funded compensation program, or receives income from employment with another employer made possible by virtue of the employee's removal.

(f) Voluntary removal or restriction of an employee. Where an employer, although not required by WAC 296-155-176 to do so, removes an employee from exposure to lead or otherwise places limitations on an employee due to the effects of lead exposure on the employee's medical condition, the employer shall provide medical removal protection benefits to the employee equal to that required by subdivisions (a) and (b) of this subsection.

[Statutory Authority: Chapter 49.17 RCW. 93-22-054 (Order 93-07), § 296-155-17623, filed 10/29/93, effective 12/10/93.]

WAC 296-155-17625 Employee information and training.

(1) General.

(a) The employer shall communicate information concerning lead hazards according to the requirements of WISHA's hazard communication standard for the construction industry, chapter 296-800 WAC, including but not limited to the requirements concerning warning signs and labels, material safety data sheets (MSDS), and employee information and training. In addition, employers shall comply with the following requirements:

(b) For all employees who are subject to exposure to lead at or above the action level on any day or who are subject to exposure to lead compounds which may cause skin or eye irritation (e.g., lead arsenate, lead azide), the employer shall provide a training program in accordance with subsection (2) of this section and assure employee participation.

(c) The employer shall provide the training program as initial training prior to the time of job assignment or prior to the start up date for this requirement, whichever comes last.

(d) The employer shall also provide the training program at least annually for each employee who is subject to lead exposure at or above the action level on any day.

(2) Training program. The employer shall assure that each employee is trained in the following:

(a) The content of this standard and its appendices;

(b) The specific nature of the operations which could result in exposure to lead above the action level;

(c) The training requirements for respiratory protection as required by chapter 296-62 WAC, Part E (see WAC 296-62-07117, 296-62-07172, and WAC 296-62-07186 through 296-62-07190);

(d) The purpose and a description of the medical surveillance program, and the medical removal protection program including information concerning the adverse health effects associated with excessive exposure to lead (with particular attention to the adverse reproductive effects on both males and females and hazards to the fetus and additional precautions for employees who are pregnant);

(e) The engineering controls and work practices associated with the employee's job assignment including training of employees to follow relevant good work practices described in Appendix B, WAC 296-155-17652;

(f) The contents of any compliance plan in effect;

(g) Instructions to employees that chelating agents should not routinely be used to remove lead from their bodies and should not be used at all except under the direction of a licensed physician; and

(h) The employee's right of access to records under Part B, chapter 296-62 WAC and chapter 296-800 WAC.

(3) Access to information and training materials.

(a) The employer shall make readily available to all affected employees a copy of this standard and its appendices.

WAC 296-155-17625 (Cont.)

(b) The employer shall provide, upon request, all materials relating to the employee information and training program to affected employees and their designated representatives, and the director.

[Statutory Authority: RCW 49.17.010, .040, .050. 01-11-038 (Order 99-36), § 296-155-17625, filed 05/09/01, effective 09/01/01.
Statutory Authority: RCW 49.17.010, .040, .050. 99-10 (Order 98-10), § 296-155-17625, filed 05/04/99, effective 09/01/99.
Statutory Authority: Chapter 49.17 RCW. 93-22-054 (Order 93-07), § 296-155-17625, filed 10/29/93, effective 12/10/93.]

WAC 296-155-17627 Signs.

(1) General.

(a) The employer may use signs required by other statutes, regulations or ordinances in addition to, or in combination with, signs required by this section.

(b) The employer shall assure that no statement appears on or near any sign required by this section which contradicts or detracts from the meaning of the required sign.

(2) Signs.

(a) The employer shall post the following warning signs in each work area where an employees exposure to lead is above the PEL.

WARNING
LEAD WORK AREA
POISON
NO SMOKING OR EATING

(b) The employer shall assure that signs required by this section are illuminated and cleaned as necessary so that the legend is readily visible.

[Statutory Authority: Chapter 49.17 RCW. 93-22-054 (Order 93-07), § 296-155-17627, filed 10/29/93, effective 12/10/93.]

WAC 296-155-17629 Recordkeeping.

(1) Exposure assessment.

(a) The employer shall establish and maintain an accurate record of all monitoring and other data used in conducting employee exposure assessments as required in WAC 296-155-17609.

(b) Exposure monitoring records shall include:

(i) The date(s), number, duration, location and results of each of the samples taken if any, including a description of the sampling procedure used to determine representative employee exposure where applicable;

(ii) A description of the sampling and analytical methods used and evidence of their accuracy;

(iii) The type of respiratory protective devices worn, if any;

(iv) Name, social security number, and job classification of the employee monitored and of all other employees whose exposure the measurement is intended to represent; and

(v) The environmental variables that could affect the measurement of employee exposure.

WAC 296-155-17629 (Cont.)

(c) The employer shall maintain monitoring and other exposure assessment records in accordance with the provisions of part B, chapter 296-62 WAC.

(2) Medical surveillance.

(a) The employer shall establish and maintain an accurate record for each employee subject to medical surveillance as required by WAC 296-155-17621.

(b) This record shall include:

(i) The name, Social Security number, and description of the duties of the employee;

(ii) A copy of the physician's written opinions;

(iii) Results of any airborne exposure monitoring done on or for that employee and provided to the physician; and

(iv) Any employee medical complaints related to exposure to lead.

(c) The employer shall keep, or assure that the examining physician keeps, the following medical records:

(i) A copy of the medical examination results including medical and work history required by WAC 296-155-17621;

(ii) A description of the laboratory procedures and a copy of any standards or guidelines used to interpret the test results or references to that information;

(iii) A copy of the results of biological monitoring.

(d) The employer shall maintain or assure that the physician maintains medical records in accordance with the provisions of part B, chapter 296-62 WAC.

(3) Medical removals.

(a) The employer shall establish and maintain an accurate record for each employee removed from current exposure to lead pursuant to WAC 296-155-17623.

(b) Each record shall include:

(i) The name and social security number of the employee;

(ii) The date of each occasion that the employee was removed from current exposure to lead as well as the corresponding date on which the employee was returned to their former job status;

(iii) A brief explanation of how each removal was or is being accomplished; and

(iv) A statement with respect to each removal indicating whether or not the reason for the removal was an elevated blood lead level.

WAC 296-155-17629 (Cont.)

(c) The employer shall maintain each medical removal record for at least the duration of an employee's employment.

(4) Objective data for exemption from requirement for initial monitoring.

(a) For purposes of WAC 296-155-176, objective data are information demonstrating that a particular product or material containing lead or a specific process, operation, or activity involving lead cannot release dust or fumes in concentrations at or above the action level under any expected conditions of use. Objective data can be obtained from an industry-wide study or from laboratory product test results from manufacturers of lead containing products or materials. The data the employer uses from an industry-wide survey must be obtained under workplace conditions closely resembling the processes, types of material, control methods, work practices and environmental conditions in the employer's current operations.

(b) The employer shall maintain the record of the objective data relied upon for at least 30 years.

(5) Availability. The employer shall make available upon request all records required to be maintained by this section to affected employees, former employees, and their designated representatives, and to the director for examination and copying.

(6) Transfer of records.

(a) Whenever the employer ceases to do business, the successor employer shall receive and retain all records required to be maintained by this section.

(b) Whenever the employer ceases to do business and there is no successor employer to receive and retain the records required to be maintained by WAC 296-155-176 for the prescribed period, these records shall be transmitted to the director.

(c) At the expiration of the retention period for the records required to be maintained by WAC 296-155-176, the employer shall notify the director at least 3 months prior to the disposal of such records and shall transmit those records to the director if requested within the period.

(d) The employer shall also comply with any additional requirements involving transfer of records set forth in WAC 296-62-05215.

[Statutory Authority: Chapter 49.17 RCW. 93-22-054 (Order 93-07), § 296-155-17629, filed 10/29/93, effective 12/10/93.]

WAC 296-155-17631 Observation of monitoring.

(1) Employee observation. The employer shall provide affected employees or their designated representatives an opportunity to observe any monitoring of employee exposure to lead conducted pursuant to WAC 296-155-17609.

(2) Observation procedures.

(a) Whenever observation of the monitoring of employee exposure to lead requires entry into an area where the use of respirators, protective clothing or equipment is required, the employer shall provide the observer with and assure the use of such respirators, clothing and equipment, and shall require the observer to comply with all other applicable safety and health procedures.

WAC 296-155-17631 (Cont.)

(b) Without interfering with the monitoring, observers shall be entitled to:

(i) Receive an explanation of the measurement procedures;

(ii) Observe all steps related to the monitoring of lead performed at the place of exposure; and

(iii) Record the results obtained or receive copies of the results when returned by the laboratory.

[Statutory Authority: Chapter 49.17 RCW. 93-22-054 (Order 93-07), § 296-155-17631, filed 10/29/93, effective 12/10/93.]

WAC 296-155-17650 Appendix A to WAC 296-155-176-Substance data sheet for occupational exposure to lead. The information contained in the appendices to WAC 296-155-176 is not intended by itself, to create any additional obligations not otherwise imposed by this standard nor detract from any existing obligation.

(1) Substance identification.

(a) Substance: Pure lead (Pb) is a heavy metal at room temperature and pressure and is a basic chemical element. It can combine with various other substances to form numerous lead compounds.

(b) Compounds covered by the standard: The word **"lead"** when used in this standard means elemental lead, all inorganic lead compounds and a class of organic lead compounds called lead soaps. This standard does not apply to other organic lead compounds.

(c) Uses: Exposure to lead occurs in several different occupations in the construction industry, including demolition or salvage of structures where lead or lead-containing materials are present; removal or encapsulation of lead-containing materials, new construction, alteration, repair, or renovation of structures that contain lead or materials containing lead; installation of products containing lead. In addition, there are construction related activities where exposure to lead may occur, including transportation, disposal, storage, or containment of lead or materials containing lead on construction sites, and maintenance operations associated with construction activities.

(d) Permissible exposure: The permissible exposure limit (PEL) set by the standard is 50 micrograms of lead per cubic meter of air (50 $\mu g/m^3$), averaged over an 8-hour workday.

(e) Action level: The standard establishes an action level of 30 micrograms of lead per cubic meter of air (30 $\mu g/m^3$), averaged over an 8-hour workday. The action level triggers several ancillary provisions of the standard such as exposure monitoring, medical surveillance, and training.

WAC 296-155-17650 (Cont.)

(2) Health hazard data.

(a) Ways in which lead enters your body. When absorbed into your body in certain doses, lead is a toxic substance. The object of the lead standard is to prevent absorption of harmful quantities of lead. The standard is intended to protect you not only from the immediate toxic effects of lead, but also from the serious toxic effects that may not become apparent until years of exposure have passed. Lead can be absorbed into your body by inhalation (breathing) and ingestion (eating). Lead (except for certain organic lead compounds not covered by the standard, such as tetraethyl lead) is not absorbed through your skin. When lead is scattered in the air as a dust, fume respiratory tract. Inhalation of airborne lead is generally the most important source of occupational lead absorption. You can also absorb lead through your digestive system if lead gets into your mouth and is swallowed. If you handle food, cigarettes, chewing tobacco, or make-up which have lead on them or handle them with hands contaminated with lead, this will contribute to ingestion. A significant portion of the lead that you inhale or ingest gets into your blood stream. Once in your blood stream, lead is circulated throughout your body and stored in various organs and body tissues. Some of this lead is quickly filtered out of your body and excreted, but some remains in the blood and other tissues. As exposure to lead continues, the amount stored in your body will increase if you are absorbing more lead than your body is excreting. Even though you may not be aware of any immediate symptoms of disease, this lead stored in your tissues can be slowly causing irreversible damage, first to individual cells, then to your organs and whole body systems.

(b) Effects of overexposure to lead.

(i) Short term (acute) overexposure. Lead is a potent, systemic poison that serves no known useful function once absorbed by your body. Taken in large enough doses, lead can kill you in a matter of days. A condition affecting the brain called acute encephalopathy may arise which develops quickly to seizures, coma, and death from cardiorespiratory arrest. A short term dose of lead can lead to acute encephalopathy. Short term occupational exposures of this magnitude are highly unusual, but not impossible. Similar forms of encephalopathy may, however, arise from extended, chronic exposure to lower doses of lead. There is no sharp dividing line between rapidly developing acute effects of lead, and chronic effects which take longer to acquire. Lead adversely affects numerous body systems, and causes forms of health impairment and disease which arise after periods of exposure as short as days or as long as several years.

(ii) Long-term (chronic) overexposure. Chronic overexposure to lead may result in severe damage to your blood-forming, nervous, urinary and reproductive systems. Some common symptoms of chronic overexposure include loss of appetite, metallic taste in the mouth, anxiety, constipation, nausea, pallor, excessive tiredness, weakness, insomnia, headache, nervous irritability, muscle and joint pain or soreness, fine tremors, numbness, dizziness, hyperactivity and colic. In lead colic there may be severe abdominal pain. Damage to the central nervous system in general and the brain (encephalopathy) in particular is one of the most severe forms of lead poisoning. The most severe, often fatal, form of encephalopathy may be preceded by vomiting, a feeling of dullness progressing to drowsiness and stupor, poor memory, restlessness, irritability, tremor, and convulsions. It may arise suddenly with the onset of seizures, followed by coma, and death. There is a tendency for muscular weakness to develop at the same time. This weakness may progress to paralysis often observed as a characteristic “wrist drop” or “foot drop” and is a manifestation of a disease to the nervous system called peripheral

WAC 296-155-17650 (Cont.)

neuropathy. Chronic overexposure to lead also results in kidney disease with few, if any, symptoms appearing until extensive and most likely permanent kidney damage has occurred. Routine laboratory tests reveal the presence of this kidney disease only after about two-thirds of kidney function is lost. When overt symptoms of urinary dysfunction arise, it is often too late to correct or prevent worsening conditions, and progression to kidney dialysis or death is possible. Chronic overexposure to lead impairs the reproductive systems of both men and women. Overexposure to lead may result in decreased sex drive, impotence and sterility in men. Lead can alter the structure of sperm cells raising the risk of birth defects. There is evidence of miscarriage and stillbirth in women whose husbands were exposed to lead or who were exposed to lead themselves. Lead exposure also may result in decreased fertility, and abnormal menstrual cycles in women. The course of pregnancy may be adversely affected by exposure to lead since lead crosses the placental barrier and poses risks to developing fetuses. Children born of parents either one of whom were exposed to excess lead levels are more likely to have birth defects, mental retardation, behavioral disorders or die during the first year of childhood. Overexposure to lead also disrupts the blood-forming system resulting in decreased hemoglobin (the substance in the blood that carries oxygen to the cells) and ultimately anemia. Anemia is characterized by weakness, pallor and fatigability as a result of decreased oxygen carrying capacity in the blood.

(iii) Health protection goals of the standard. Prevention of adverse health effects for most workers from exposure to lead throughout a working lifetime requires that a worker's blood lead level (BLL, also expressed as PbB) be maintained at or below forty micrograms per deciliter of whole blood (40 µg/dl). The blood lead levels of workers (both male and female workers) who intend to have children should be maintained below 30 µg/dl to minimize adverse reproductive health effects to the parents and to the developing fetus. The measurement of your blood lead level (BLL) is the most useful indicator of the amount of lead absorbed by your body.

Blood lead levels are most often reported in units of milligrams (mg) or micrograms (µg) of lead (1 mg=1000 µg) per 100 grams (100g), 100 milliliters (100 ml) or deciliter (dl) of blood. These three units are essentially the same. Sometime BLLs are expressed in the form of mg% or µg%. This is a shorthand notation for 100g, 100 ml, or dl. (References to BLL measurements in this standard are expressed in the form of µg/dl.)

BLL measurements show the amount of lead circulating in your blood stream, but do not give any information about the amount of lead stored in your various tissues. BLL measurements merely show current absorption of lead, not the effect that lead is having on your body or the effects that past lead exposure may have already caused. Past research into lead-related diseases, however, has focused heavily on associations between BLLs and various diseases. As a result, your BLL is an important indicator of the likelihood that you will gradually acquire a lead-related health impairment or disease.

Once your blood lead level climbs above 40 µg/dl, your risk of disease increases. There is a wide variability of individual response to lead, thus it is difficult to say that a particular BLL in a given person will cause a particular effect. Studies have associated fatal encephalopathy with BLLs as low as 150 µg/dl. Other studies have shown other forms of diseases in some workers with BLLs well below 80 µg/dl. Your BLL is a

WAC 296-155-17650 (Cont.)

crucial indicator of the risks to your health, but one other factor is also extremely important. This factor is the length of time you have had elevated BLLs. The longer you have an elevated BLL, the greater the risk that large quantities of lead are being gradually stored in your organs and tissues (body burden). The greater your overall body burden, the greater the chances of substantial permanent damage. The best way to prevent all forms of lead-related impairments and diseases-both short-term and long-term is to maintain your BLL below 40 µg/dl. The provisions of the standard are designed with this end in mind.

Your employer has prime responsibility to assure that the provisions of the standard are complied with both by the company and by individual workers. You, as a worker, however, also have a responsibility to assist your employer in complying with the standard. You can play a key role in protecting your own health by learning about the lead hazards and their control, learning what the standard requires, following the standard where it governs your own actions, and seeing that your employer complies with provisions governing employee actions.

(iv) Reporting signs and symptoms of health problems. You should immediately notify your employer if you develop signs or symptoms associated with lead poisoning or if you desire medical advice concerning the effects of current or past exposure to lead or your ability to have a healthy child. You should also notify your employer if you have difficulty breathing during a respirator fit test or while wearing a respirator. In each of these cases, your employer must make available to you appropriate medical examinations or consultations.

These must be provided at no cost to you and at a reasonable time and place. The standard contains a procedure whereby you can obtain a second opinion by a physician of your choice if your employer selected the initial physician.

[Statutory Authority: Chapter 49.17 RCW. 93-22-054 (Order 93-07), § 296-155-17650, filed 10/29/93, effective 12/10/93.]

WAC 296-155-17652 Appendix B to WAC 296-155-176-Employee standard summary. This appendix summarizes key provisions of the standard for lead in construction that you as a worker should become familiar with.

(1) Permissible exposure limit (PEL)-WAC 296-62-17607.

The standard sets a permissible exposure limit (PEL) of 50 micrograms of lead per cubic meter of air (50 $\mu g/m^3$), averaged over an 8-hour workday which is referred to as a time-weighted average (TWA). This is the highest level of lead in air to which you may be permissibly exposed over an 8-hour workday.

However, since this is an 8-hour average, short exposures above the PEL are permitted so long as for each 8-hour work day your average exposure does not exceed this level. This standard, however, takes into account the fact that your daily exposure to lead can extend beyond a typical 8-hour workday as the result of overtime or other alterations in your work schedule. To deal with this situation, the standard contains a formula which reduces your permissible exposure when you are exposed more than 8 hours. For example, if you are exposed to lead for 10 hours a day, the maximum permitted average exposure would be $40\mu g/m^3$.

WAC 296-155-17652 (Cont.)

(2) Exposure assessment-WAC 296-155-17609.

If lead is present in your workplace in any quantity, your employer is required to make an initial determination of whether any employee's exposure to lead exceeds the action level (30 $\mu g/m^3$ averaged over an 8-hour day). Employee exposure is that exposure which would occur if the employee were not using a respirator. This initial determination requires your employer to monitor workers' exposures unless the employee has objective data which can demonstrate conclusively that no employee will be exposed to lead in excess of the action level. Where objective data is used in lieu of actual monitoring the employer must establish and maintain an accurate record, documenting its relevancy in assessing exposure levels for current job conditions. If such objective data is available, the employer need proceed no further on employee exposure assessment until such time that conditions have changed and the determination is no longer valid.

Objective data may be compiled from various sources, e.g., insurance companies and trade associations and information from suppliers or exposure data collected from similar operations. Objective data may also comprise previously-collected sampling data including area monitoring. If it cannot be determined through using objective data that worker exposure is less than the action level, your employer must conduct monitoring or must rely on relevant previous personal sampling, if available. Where monitoring is required for the initial determination, it may be limited to a representative number of employees who are reasonably expected to have the highest exposure levels. If your employer has conducted appropriate air sampling for lead in the past 12 months, they may use these results, provided they are applicable to the same employee tasks and exposure conditions and meet the requirements for accuracy as specified in the standard. As with objective data, if such results are relied upon for the initial determination, your employer must establish and maintain a record as to the relevancy of such data to current job conditions.

If there have been any employee complaints of symptoms which may be attributable to exposure to lead or if there is any other information or observations which would indicate employee exposure to lead, this must also be considered as part of the initial determination. If this initial determination shows that a reasonable possibility exists that any employee may be exposed, without regard to respirator, over the action level, your employer must set up an air monitoring program to determine the exposure level representative of each employee exposed to lead at your workplace. In carrying out this air monitoring program, your employer is not required to monitor the exposure of every employee, but they must monitor a representative number of employees and job types. Enough sampling must be done to enable each employee's exposure level to be reasonably represent full shift exposure. In addition, these air samples must be taken under conditions which represent each employee's regular, daily exposure to lead. Sampling performed in the past 12 months may be used to determine exposures above the action level if such sampling was conducted during work activities essentially similar to present work conditions.

The standard lists certain tasks which may likely result in exposures to lead in excess of the PEL and, in some cases, exposures in excess of 50 times the PEL. If you are performing any of these tasks, your employer must provide you with appropriate respiratory protection, protective clothing and equipment, change areas, hand washing facilities, biological monitoring, and training until such time that an exposure assessment is conducted which demonstrates that your exposure level is below the PEL.

If you are exposed to lead and air sampling is performed, your employer is required to notify you in writing within 5 working days of the air monitoring results which represent your exposure. If the results indicate that your exposure exceeds the PEL (without regard to your use of a respirator), then your employer must also notify you of this in writing, and provide you with a description of the corrective action that has been taken or will be taken to reduce your exposure.

WAC 296-155-17652 (Cont.)

Your exposure must be rechecked by monitoring, at least every six months if your exposure is at or over the action level but below the PEL. Your employer may discontinue monitoring for you if 2 consecutive measurements, taken at least 7 days apart, are at or below the action level. Air monitoring must be repeated every 3 months if you are exposed over the PEL. Your employer must continue monitoring for you at this frequency until 2 consecutive measurements, taken at least 7 days apart, are below the PEL but above the action level, at which time your employer must repeat monitoring of your exposure every six months and may discontinue monitoring only after your exposure drops to or below the action level. However, whenever there is a change of equipment, process, control, or personnel or a new type of job is added at your workplace which may result in new or additional exposure to lead, your employer must perform additional monitoring.

(3) Methods of compliance-WAC 296-155-17611.

Your employer is required to assure that no employee is exposed to lead in excess of the PEL as an 8-hour TWA. The standard for lead in construction requires employers to institute engineering and work practice controls including administrative controls to the extent feasible to reduce employee exposure to lead. Where such controls are feasible but not adequate to reduce exposures below the PEL they must be used nonetheless to reduce exposures to the lowest level that can be accomplished by these means and then supplemented with appropriate respiratory protection.

Your employer is required to develop and implement a written compliance program prior to the commencement of any job where employee exposures may reach the PEL as an 8-hour TWA. The standard identifies the various elements that must be included in the plan. For example, employers are required to include a description of operations in which lead is emitted, detailing other relevant information about the operation such as the type of equipment used, the type of material involved, employee job responsibilities, operating procedures and maintenance practices. In addition, your employer's compliance plan must specify the means that will be used to achieve compliance and, where engineering controls are required, include any engineering plans or studies that have been used to select the control methods. If administrative controls involving job rotation are used to reduce employee exposure to lead, the job rotation schedule must be included in the compliance plan. The plan must also detail the type of protective clothing and equipment, including respirator, housekeeping and hygiene practices that will be used to protect you from the adverse effects of exposure to lead.

The written compliance program must be made available, upon request, to affected employees and their designated representatives, and the director.

Finally, the plan must be reviewed and updated at least every 6 months to assure it reflects the current status in exposure control.

(4) Respiratory protection-WAC 296-155-17613.

Your employer is required to select respirator from the types listed in Table I of the Respiratory Protection section of the standard (see WAC 296-155-17613). Any respirator chosen must be certified by the National Institute for Occupational Safety and Health (NIOSH) under the provisions of 42 CFR part 84. This respirator selection table will enable your employer to choose a type of respirator that will give you a proper amount of protection based on your airborne lead exposure. Your employer may select a type of respirator that provides greater protection than that required by the standard; that is, one recommended for a higher concentration of lead than is present in your workplace. For example, a powered air-purifying respirator (PAPR) is much more protective than a typical negative pressure respirator, and may also be

WAC 296-155-17652 (Cont.)

more comfortable to wear. A PAPR has a filter, cartridge, or canister to clean the air, and a power source which continuously blows filtered air into your breathing zone. Your employer might make a PAPR available to you to ease the burden of having to wear a respirator for long periods of time. The standard provides that you can obtain a PAPR upon request.

Your employer must also start a Respiratory Protection Program. This program must include written procedures for the proper selection, use, cleaning, storage, and maintenance of respirator.

Your employer must ensure that your respirator facepiece fits properly. Proper fit of a respirator facepiece is critical to your protection from airborne lead. Obtaining a proper fit on each employee may require your employer to make available several different types of respirator masks. To ensure that your respirator fits properly and that facepiece leakage is minimal, your employer must give you either a qualitative or quantitative fit test as specified in WAC 296-62-07201 through 296-62-07248, Appendices A-1, A-2 and A-3 of chapter 296-62 WAC, Part E.

(5) Protective work clothing and equipment-WAC 296-155-17615.

If you are exposed to lead above the PEL as an 8-hour TWA, without regard to your use of a respirator, or if you are exposed to lead compounds such as lead arsenate or lead azide which can cause skin and eye irritation, your employer must provide you with protective work clothing and equipment appropriate for the hazard. If work clothing is provided, it must be provided in a clean and dry condition at least weekly, and daily if your airborne exposure to lead is greater than 200 $\mu g/m^3$. Appropriate protective work clothing and equipment can include coveralls or similar full-body work clothing, gloves, hats, shoes or disposable shoe coverlets, and face shields or vented goggles. Your employer is required to provide all such equipment at no cost to you. In addition, your employer is responsible for providing repairs and replacement as necessary, and also is responsible for the cleaning, laundering or disposal of protective clothing and equipment.

The standard requires that your employer assure that you follow good work practices when you are working in areas where your exposure to lead may exceed the PEL. With respect to protective clothing and equipment, where appropriate, the following procedures should be observed prior to beginning work:

- Change into work clothing and shoe covers in the clean section of the designated changing areas;
- Use work garments of appropriate protective gear, including respirator before entering the work area; and
- Store any clothing not worn under protective clothing in the designated changing area. Workers should follow these procedures upon leaving the work area:
- HEPA vacuum heavily contaminated protective work clothing while it is still being worn. At no time may lead be removed from protective clothing by any means which result in uncontrolled dispersal of lead into the air;
- Remove shoe covers and leave them in the work area;
- Remove protective clothing and gear in the dirty area of the designated changing area. Remove protective coveralls by carefully rolling down the garment to reduce exposure to dust.
- Remove respirator last; and
- Wash hands and face.

Workers should follow these procedures upon finishing work for the day (in addition to procedures described above):

- Where applicable, place disposal coveralls and shoe covers with the abatement waste;
- Contaminated clothing which is to be cleaned, laundered or disposed of must be placed in closed containers in the change room.

WAC 296-155-17652 (Cont.)

- Clean protective gear, including respirator, according to standard procedures;
- Wash hands and face again.

If showers are available, take a shower and wash hair. If shower facilities are not available at the work site, shower immediately at home and wash hair.

(6) Housekeeping-WAC 296-155-17617.

Your employer must establish a housekeeping program sufficient to maintain all surfaces as free as practicable of accumulations of lead dust. Vacuuming is the preferred method of meeting this requirement, and the use of compressed air to clean floors and other surfaces is generally prohibited unless removal with compressed air is done in conjunction with ventilation systems designed to contain dispersal of the lead dust. Dry or wet sweeping, shoveling, or brushing may not be used except where vacuuming or other equally effective methods have been tried and do not work. Vacuums must be used equipped with a special filter called a high-efficiency particulate air (HEPA) filter and emptied in a manner which minimizes the reentry of lead into the workplace.

(7) Hygiene facilities and practices-WAC 296-155-17619.

The standard requires that hand washing facilities be provided where occupational exposure to lead occurs. In addition, change areas, showers (where feasible), and lunchrooms or eating areas are to be made available to workers exposed to lead above the PEL. Your employer must assure that except in these facilities, food and beverage is not present or consumed, tobacco products are not present or used, and cosmetics are not applied, where airborne exposures are above the PEL. Change rooms provided by your employer must be equipped with separate storage facilities for your protective clothing and equipment and street clothes to avoid cross-contamination. After showering, no required protective clothing or equipment worn during the shift may be worn home. It is important that contaminated clothing or equipment be removed in change areas and not be worn home or you will extend your exposure and expose your family since lead from your clothing can accumulate in your house, car, etc.

Lunchrooms or eating areas may not be entered with protective clothing or equipment unless surface dust has been removed by vacuuming, downdraft booth, or other cleaning method. Finally, workers exposed above the PEL must wash both their hands and faces prior to eating, drinking, smoking or applying cosmetics.

All of the facilities and hygiene practices just discussed are essential to minimize additional sources of lead absorption from inhalation or ingestion of lead that may accumulate on you, your clothes, or your possessions. Strict compliance with these provisions can virtually eliminate several sources of lead exposure which significantly contribute to excessive lead absorption.

(8) Medical surveillance-WAC 296-155-17621.

The medical surveillance program is part of the standard's comprehensive approach to the prevention of lead-related disease. Its purpose is to supplement the main thrust of the standard which is aimed at minimizing airborne concentrations of lead and sources of ingestion. Only medical surveillance can determine if the other provisions of the standard have affectively protected you as an individual. Compliance with the standard's provision will protect most workers from the adverse effects of lead exposure, but may not be satisfactory to protect individual workers:

- Who have high body burdens of lead acquired over past years,
- Who have additional uncontrolled sources of nonoccupational lead exposure,

WAC 296-155-17652 (Cont.)

- Who exhibit unusual variations in lead absorption rates, or
- Who have specific nonwork related medical conditions which could be aggravated by lead exposure (e.g., renal disease, anemia).

In addition, control systems may fail, or hygiene and respirator programs may be inadequate. Periodic medical surveillance of individual workers will help detect those failures. Medical surveillance will also be important to protect your reproductive ability-regardless of whether you are a man or woman.

All medical surveillance required by the standard must be performed by or under the supervision of a licensed physician. The employer must provide required medical surveillance without cost to employees and at a reasonable time and place. The standard's medical surveillance program has two parts-periodic biological monitoring and medical examinations. Your employer's obligation to offer you medical surveillance is triggered by the results of the air monitoring program. Full medical surveillance must be made available to all employees who are or may be exposed to lead in excess of the action level for more than 30 days a year and whose blood lead level exceeds 40 µg/dl. Initial medical surveillance consisting of blood sampling and analysis for lead and zinc protoporphyrin must be provided to all employees exposed at any time (1 day) above the action level.

Biological monitoring under the standard must be provided at least every 2 months for the first 6 months and every 6 months thereafter until your blood lead level is below 40 µg/dl. A zinc protoporphyrin (ZPP) test is a very useful blood test which measures an adverse metabolic effect of lead on your body and is therefore an indicator of lead toxicity.

If your BLL exceeds 40 µg/dl the monitoring frequency must be increased from every 6 months to at least every 2 months and not reduced until two consecutive BLLs indicate a blood lead level below 40 µg/dl. Each time your BLL is determined to be over 40 µg/dl, your employer must notify you of this in writing within five working days of their receipt of the test results. The employer must also inform you that the standard requires temporary medical removal with economic protection when your BLL exceeds 50 µg/dl. (See Discussion of medical removal protection-WAC 296-155-17623.) Anytime your BLL exceeds 50 µg/dl your employer must make available to you within two weeks of receipt of these test results a second follow-up BLL test to confirm your BLL. If the two tests both exceed 50 µg/dl, and you are temporarily removed, then your employer must make successive BLL tests available to you on a monthly basis during the period of your removal.

Medical examinations beyond the initial one must be made available on an annual basis if your blood lead level exceeds 40 µg/dl at any time during the preceding year and you are being exposed above the airborne action level of 30 $\mu g/m^3$ for 30 or more days per year. The initial examination will provide information to establish a baseline to which subsequent data can be compared.

An initial medical examination to consist of blood sampling and analysis for lead and zinc protoporphyrin must also be made available (prior to assignment) for each employee being assigned for the first time to an area where the airborne concentration of lead equals or exceeds the action level at any time. In addition, a medical examination or consultation must be made available as soon as possible if you notify your employer that you are experiencing signs or symptoms commonly associated with lead poisoning or that you have difficulty breathing while wearing a respirator or during a respirator fit test. You must also be provided a medical examination or consultation if you notify your employer that you desire medical advice concerning the effects of current or past exposure to lead on your ability to procreate a healthy child.

WAC 296-155-17652 (Cont.)

Finally, appropriate follow-up medical examinations or consultations may also be provided for employees who have been temporarily removed from exposure under the medical removal protection provisions of the standard. (See subsection (9), below.)

The standard specifies the minimum content of pre-assignment and annual medical examinations. The content of other types of medical examinations and consultations is left up to the sound discretion of the examining physician. Preassignment and annual medical examinations must include:

- A detailed work history and medical history;
- A thorough physical examination, including an evaluation of your pulmonary status if you will be required to use a respirator;
- A blood pressure measurement; and
- A series of laboratory tests designed to check your blood chemistry and your kidney function.

In addition, at any time upon your request, a laboratory evaluation of male fertility will be made (microscopic examination of a sperm sample), or a pregnancy test will be given.

The standard does not require that you participate in any of the medical procedures, tests, etc. which your employer is required to make available to you. Medical surveillance can, however, play a very important role in protecting your health. You are strongly encouraged, therefore, to participate in a meaningful fashion. The standard contains a multiple physician review mechanism which will give you a chance to have a physician of your choice directly participate in the medical surveillance program. If you are dissatisfied with an examination by a physician chosen by your employer, you can select a second physician to conduct an independent analysis. The two doctors would attempt to resolve any differences of opinion, and select a third physician to resolve any firm dispute. Generally your employer will choose the physician who conducts medical surveillance under the lead standard-unless you and your employer can agree on the choice of a physician or physicians. Some companies and unions have agreed in advance, for example, to use certain independent medical laboratories or panels of physicians. Any of these arrangements are acceptable so long as required medical surveillance is made available to workers.

The standard requires your employer to provide certain information to a physician to aid in their examination of you. This information includes:

- The standard and its appendices,
- A description of your duties as they relate to occupational lead exposure,
- Your exposure level or anticipated exposure level,
- A description of any personal protective equipment you wear,
- Prior blood lead level results, and
- Prior written medical opinions concerning you that the employer has.

After a medical examination or consultation the physician must prepare a written report which must contain:

- The physician's opinion as to whether you have any medical condition which places you at increased risk of material impairment to health from exposure to lead,
- Any recommended special protective measures to be provided to you,
- Any blood lead level determinations, and
- Any recommended limitation on your use of respirator.

WAC 296-155-17652 (Cont.)

This last element must include a determination of whether you can wear a powered air purifying respirator (PAPR) if you are found unable to wear a negative pressure respirator.

The medical surveillance program of the lead standard may at some point in time serve to notify certain workers that they have acquired a disease or other adverse medical condition as a result of occupational lead exposure. If this is true, these workers might have legal rights to compensation from public agencies, their employers, firms that supply hazardous products to their employers, or other persons. Some states have laws, including worker compensation laws, that disallow a worker who learns of a job-related health impairment to sue, unless the worker sues within a short period of time after learning of the impairment. (This period of time may be a matter of months or years.) An attorney can be consulted about these possibilities. It should be stressed that WISHA is in no way trying to either encourage or discourage claims or lawsuits. However, since results of the standard's medical surveillance program can significantly affect the legal remedies of a worker who has acquired a job-related disease or impairment, it is proper for WISHA to make you aware of this.

The medical surveillance section of the standard also contains provisions dealing with chelation. Chelation is the use of certain drugs (administered in pill form or injected into the body) to reduce the amount of lead absorbed in body tissues. Experience accumulated by the medical and scientific communities has largely confirmed the effectiveness of this type of therapy for the treatment of very severe lead poisoning. On the other hand, it has also been established that there can be a long list of extremely harmful side effects associated with the use of chelating agents. The medical community has balanced the advantages and disadvantages resulting from the use of chelating agents in various circumstances and has established when the use of these agents is acceptable. The standard includes these accepted limitations due to a history of abuse of chelation therapy by some lead companies. The most widely used chelating agents are calcium disodium EDTA, (Ca Na2 EDTA), Calcium Disodium Versenate (Versenate), and d-penicillamine (penicillamine or Cupramine).

The standard prohibits “prophylactic chelation” of any employee by any person the employer retains, supervises or controls. “Prophylactic chelation” is the routine use of chelating or similarly acting drugs to prevent elevated blood levels in workers who are occupationally exposed to lead, or the use of these drugs to routinely lower blood lead levels to predesignated concentrations believed to be “safe”. It should be emphasized that where an employer takes a worker who has no symptoms of lead poisoning and has chelation carried out by a physician (either inside or outside of a hospital) solely to reduce the worker's blood lead level, that will generally be considered prophylactic chelation. The use of a hospital and a physician does not mean that prophylactic chelation is not being performed. Routine chelation to prevent increased or reduce current blood lead levels is unacceptable whatever the setting.

The standard allows the use of “therapeutic” or “diagnostic” chelation if administered under the supervision of a licensed physician in a clinical setting with thorough and appropriate medical monitoring. Therapeutic chelation responds to severe lead poisoning where there are marked symptoms. Diagnostic chelation involved giving a patient a dose of the drug then collecting all urine excreted for some period of time as an aid to the diagnosis of lead poisoning.

In cases where the examining physician determines that chelation is appropriate, you must be notified in writing of this fact before such treatment. This will inform you of a potentially harmful treatment, and allow you to obtain a second opinion.

WAC 296-155-17652 (Cont.)

(9) Medical removal protection-WAC 296-155-17623.

Excessive lead absorption subjects you to increased risk of disease. Medical removal protection (MRP) is a means of protecting you when, for whatever reasons, other methods, such as engineering controls, work practices, and respirator, have failed to provide the protection you need. MRP involves the temporary removal of a worker from their regular job to a place of significantly lower exposure without any loss of earnings, seniority, or other employment rights or benefits. The purpose of this program is to cease further lead absorption and allow your body to naturally excrete lead which has previously been absorbed. Temporary medical removal can result from an elevated blood lead level, or a medical opinion. For up to 18 months, or for as long as the job the employee was removed from lasts, protection is provided as a result of either form of removal. The vast majority of removed workers, however, will return to their former jobs long before this eighteen month period expires.

You may also be removed from exposure even if your blood lead level is below 50 µg/dl if a final medical determination indicates that you temporarily need reduced lead exposure for medical reasons. If the physician who is implementing your employers medical program makes a final written opinion recommending your removal or other special protective measures, your employer must implement the physician's recommendation. If you are removed in this manner, you may only be returned when the doctor indicates that it is safe for you to do so.

The standard does not give specific instructions dealing with what an employer must do with a removed worker. Your job assignment upon removal is a matter for you, your employer and your union (if any) to work out consistent with existing procedures for job assignments. Each removal must be accomplished in a manner consistent with existing collective bargaining relationships. Your employer is given broad discretion to implement temporary removals so long as no attempt is made to override existing agreements. Similarly, a removed worker is provided no right to veto an employer's choice which satisfies the standard.

In most cases, employers will likely transfer removed employees to other jobs with sufficiently low lead exposure. Alternatively, a worker's hours may be reduced so that the time weighted average exposure is reduced, or they may be temporarily laid off if no other alternative is feasible.

In all of these situation, MRP benefits must be provided during the period of removal-i.e., you continue to receive the same earnings, seniority, and other rights and benefits you would have had if you had not been removed. Earnings includes more than just your base wage; it includes overtime, shift differentials, incentives, and other compensation you would have earned if you had not been removed. During the period of removal you must also be provided with appropriate follow-up medical surveillance. If you were removed because your blood lead level was too high, you must be provided with a monthly blood test. If a medical opinion caused your removal, you must be provided medical tests or examinations that the doctor believes to be appropriate. If you do not participate in this follow up medical surveillance, you may lose your eligibility for MRP benefits.

When you are medically eligible to return to your former job, your employer must return you to your **"former job status."** This means that you are entitled to the position, wages, benefits, etc., you would have had if you had not been removed. If you would still be in your old job if no removal had occurred that is where you go back. If not, you are returned consistent with whatever job assignment discretion your employer would have had if no removal had occurred. MRP only seeks to maintain your rights, not expand them or diminish them.

WAC 296-155-17652 (Cont.)

If you are removed under MRP and you are also eligible for worker compensation or other compensation for lost wages, your employer's MRP benefits obligation is reduced by the amount that you actually receive from these other sources. This is also true if you obtain other employment during the time you are laid off with MRP benefits.

The standard also covers situations where an employer voluntarily removes a worker from exposure to lead due to the effects of lead on the employee's medical condition, even though the standard does not require removal. In these situations MRP benefits must still be provided as though the standard required removal. Finally, it is important to note that in all cases where removal is required, respirator cannot be used as a substitute. Respirator may be used before removal becomes necessary, but not as an alternative to a transfer to a low exposure job, or to a lay-off with MRP benefits.

(10) Employee information and training-WAC 296-155-17625.

Your employer is required to provide an information and training program for all employees exposed to lead above the action level or who may suffer skin or eye irritation from lead compounds such as lead arsenate or lead azide. The program must train these employees regarding the specific hazards associated with their work environment, protective measures which can be taken, including the contents of any compliance plan in effect, the danger of lead to their bodies (including their reproductive systems), and their rights under the standard. All employees must be trained prior to initial assignment to areas where there is a possibility of exposure over the action level.

This training program must also be provided at least annually thereafter unless further exposure above the action level will not occur.

(11) Signs-WAC 296-155-17627.

The standard requires that the following warning sign be posted in work areas where the exposure to lead exceeds the PEL:

WARNING
LEAD WORK AREA
POISON
NO SMOKING OR EATING

These signs are to be posted and maintained in a manner which assures that the legend is readily visible.

(12) Recordkeeping-WAC 296-155-17629.

Your employer is required to keep all records of exposure monitoring for airborne lead. These records must include the name and job classification of employees measured, details of the sampling and analytical techniques, the results of this sampling, and the type of respiratory protection being worn by the person sampled. Such records are to be retained for at least 30 years. Your employer is also required to keep all records of biological monitoring and medical examination results. These records must include the names of the employees, the physician's written opinion, and a copy of the results of the examination. Medical records must be preserved and maintained for the duration of employment plus 30 years. However, if the employee's duration of employment is less than one year, the employer need not retain that employee's medical records beyond the period of employment if they are provided to the employee upon termination of employment.

WAC 296-155-17652 (Cont.)

Recordkeeping is also required if you are temporarily removed from your job under the medical removal protection program. This record must include your name and Social Security number, the date of your removal and return, how the removal was or is being accomplished, and whether or not the reason for the removal was an elevated blood lead level. Your employer is required to keep each medical removal record only for as long as the duration of an employee's employment.

The standard requires that if you request to see or copy environmental monitoring, blood lead level monitoring, or medical removal records, they must be made available to you or to a representative that you authorize. Your union also has access to these records. Medical records other than BLL's must also be provided upon request to you, to your physician or to any other person whom you may specifically designate. Your union does not have access to your personal medical records unless you authorize their access.

(13) Observation of monitoring-WAC 296-155-17631.

When air monitoring for lead is performed at your workplace as required by this standard, your employer must allow you or someone you designate to act as an observer of the monitoring. Observers are entitled to an explanation of the measurement procedure, and to record the results obtained. Since results will not normally be available at the time of the monitoring, observers are entitled to record or receive the results of the monitoring when returned by the laboratory. Your employer is required to provide the observer with any personal protective devices required to be worn by employees working in the area that is being monitored. The employer must require the observer to wear all such equipment and to comply with all other applicable safety and health procedures.

(14) Startup date-WAC 296-155-17635.

Employer obligations under the standard begin as of that date with full implementation of engineering controls as soon as possible but no later than within 4 months, and all other provisions completed as soon as possible, but no later than within 2 months from the effective date.

(15) For additional information.

(a) A copy of the standard for lead in construction can be obtained free of charge by calling or writing to the department of labor and industries, Post Office Box 44620, Mailstop 44620, Olympia, Washington 98504-4620: Telephone (360) 956-5527.

(b) Additional information about the standard, its enforcement, and your employer's compliance can be obtained from the nearest office listed in your telephone directory under the state of Washington, department of labor and industries.

[Statutory Authority: RCW 49.17.010, .040, .050. 99-10 (Order 98-10), § 296-155-17652, filed 05/04/99, effective 09/01/99.
Statutory Authority: Chapter 49.17 RCW. 93-22-054 (Order 93-07), § 296-155-17652, filed 10/29/93, effective 12/10/93.]

WAC 296-155-17654 Appendix C to WAC 296-155-176-Medical surveillance guidelines.

(1) Introduction.

The primary purpose of the Washington Industrial Safety and Health Act of 1973 is to assure, so far as possible, safe and healthful working conditions for every working man and woman. The occupational health standard for lead in construction is designed to protect workers exposed to inorganic lead including metallic lead, all inorganic lead compounds and organic lead soaps.

WAC 296-155-17654 (Cont.)

Under this standard occupational exposure to inorganic lead is to be limited to 50 $\mu g/m^3$ (micrograms per cubic meter) based on an 8 hour time-weighted average (TWA). This permissible exposure limit (PEL) must be achieved through a combination of engineering, work practice and administrative controls to the extent feasible. Where these controls are in place but are found not to reduce employee exposures to or below the PEL, they must be used nonetheless, and supplemented with respirators to meet the 50 $\mu g/m^3$ exposure limit.

The standard also provides for a program of biological monitoring for employees exposed to lead above the action level at any time, and additional medical surveillance for all employees exposed to levels of inorganic lead above 30 $\mu g/m^3$ (TWA) for more than 30 days per year and whose BLL exceeds 40 µg/dl.

The purpose of this document is to outline the medical surveillance provisions of the standard for inorganic lead in construction, and to provide further information to the physician regarding the examination and evaluation of workers exposed to inorganic lead.

Subsection (2) provides a detailed description of the monitoring procedure including the required frequency of blood testing for exposed workers, provisions for medical removal protection (MRP), the recommended right of the employee to a second medical opinion, and notification and recordkeeping requirements of the employer. A discussion of the requirements for respirator use and respirator monitoring and WISHA's position on prophylactic chelation therapy are also included in this subsection.

Subsection (3) discusses the toxic effects and clinical manifestations of lead poisoning and effects of lead intoxication on enzymatic pathways in heme synthesis. The adverse effects on both male and female reproductive capacity and on the fetus are also discussed.

Subsection (4) outlines the recommended medical evaluation of the worker exposed to inorganic lead, including details of the medical history, physical examination, and recommended laboratory tests, which are based on the toxic effects of lead as discussed in subsection (3).

Subsection (5) provides detailed information concerning the laboratory tests available for the monitoring of exposed workers. Included also is a discussion of the relative value of each test and the limitations and precautions which are necessary in the interpretation of the laboratory results.

(2) Medical surveillance and monitoring requirements for workers exposed to inorganic lead.

Under the standard for inorganic lead in the construction industry, initial medical surveillance consisting of biological monitoring to include blood lead and ZPP level determination shall be provided to employees exposed to lead at or above the action level on any one day. In addition, a program of biological monitoring is to be made available to all employees exposed above the action level at any time and additional medical surveillance is to be made available to all employees exposed to lead above 30 $\mu g/m^3$ TWA for more than 30 days each year and whose BLL exceeds 40 µg/dl. This program consists of periodic blood sampling and medical evaluation to be performed on a schedule which is defined by previous laboratory results, worker complaints or concerns, and the clinical assessment of the examining physician.

Under this program, the blood lead level (BLL) of all employees who are exposed to lead above 30 $\mu g/m^3$ for more than 30 days per year or whose blood lead is above 40 µg/dl but exposed for no more than 30 days per year is to be determined at least every two months for the first six months of exposure and every six months thereafter. The frequency is increased to every two months for employees whose last blood lead level was 40 µg/dl or above. For employees who are removed from exposure to lead due to

WAC 296-155-17654 (Cont.)

an elevated blood lead, a new blood lead level must be measured monthly. A zinc protoporphyrin (ZPP) measurement is strongly recommended on each occasion that a blood lead level measurement is made.

An annual medical examination and consultation performed under the guidelines discussed in subsection (4) is to be made available to each employee exposed above 30 $\mu g/m^3$ for more than 30 days per year for whom a blood test conducted at any time during the preceding 12 months indicated a blood lead level at or above 40 µg/dl. Also, an examination is to be given to all employees prior to their assignment to an area in which airborne lead concentrations reach or exceed the 30 $\mu g/m^3$ for more than 30 days per year. In addition, a medical examination must be provided as soon as possible after notification by an employee that the employee has developed signs or symptoms commonly associated with lead intoxication, that the employee desires medical advice regarding lead exposure and the ability to procreate a healthy child, or that the employee has demonstrated difficulty in breathing during a respirator fitting test or during respirator use. An examination is also to be made available to each employee removed from exposure to lead due to a risk of sustaining material impairment to health, or otherwise limited or specially protected pursuant to medical recommendations.

Results of biological monitoring or the recommendations of an examining physician may necessitate removal of an employee from further lead exposure pursuant to the standard's medical removal protection (MRP) program. The object of the MRP program is to provide temporary medical removal to workers either with substantially elevated blood lead levels or otherwise at risk of sustaining material health impairment from continued substantial exposure to lead.

Under the standard's ultimate worker removal criteria, a worker is to be removed from any work having an eight hour TWA exposure to lead of 30 $\mu g/m^3$ when their blood lead level reaches 50 µg/dl and is confirmed by a second follow-up blood lead level performed within two weeks after the employer receives the results of the first blood sampling test. Return of the employee to their job status depends on a worker's blood lead level declining to 40 µg/dl.

As part of the standard, the employer is required to notify in writing each employee whose blood lead level exceeds 40 µg/dl. In addition each such employee is to be informed that the standard requires medical removal with MRP benefits, discussed below, when an employee's blood lead level exceeds the above defined limit.

In addition to the above blood lead level criterion, temporary worker removal may also take place as a result of medical determinations and recommendations. Written medical opinions must be prepared after each examination pursuant to the standard. If the examining physician includes a medical finding, determination or opinion that the employee has a medical condition which places the employee at increased risk of material health impairment from exposure to lead, then the employee must be removed from exposure to lead at or above 30 $\mu g/m^3$. Alternatively, if the examining physician recommends special protective measures for an employee (e.g., use of a powered air purifying respirator) or recommends limitations on an employee's exposure to lead, then the employer must implement these recommendations.

Recommendations may be more stringent than the specific provisions of the standard. The examining physician, therefore, is given broad flexibility to tailor special protective procedures to the needs of individual employees. This flexibility extends to the evaluation and management of pregnant workers and male and female workers who are planning to raise children. Based on the history, physical examination, and laboratory studies, the physician might recommend special protective measures or medical removal for an employee who is pregnant or who is planning to conceive a child when, in the physician's judgment, continued exposure to lead at the current job would pose a significant risk. The return of the employee to their former job status, or the removal of special protections or limitations,

WAC 296-155-17654 (Cont.)

depends upon the examining physician determining that the employee is no longer at increased risk of material impairment or that special measures are no longer needed.

During the period of any form of special protection or removal, the employer must maintain the worker's earnings, seniority, and other employment rights and benefits (as though the worker had not been removed) for a period of up to 18 months or for as long as the job the employee was removed from lasts if less than 18 months. This economic protection will maximize meaningful worker participation in the medical surveillance program, and is appropriate as part of the employer's overall obligation to provide a safe and healthful workplace. The provisions of MRP benefits during the employee's removal period may, however, be conditioned upon participation in medical surveillance.

The lead standard provides for a multiple physician review in cases where the employee wishes a second opinion concerning potential lead poisoning or toxicity. If an employee wishes a second opinion, they can make an appointment with a physician of their choice. This second physician will review the findings, recommendations or determinations of the first physician and conduct any examinations, consultations or tests deemed necessary in an attempt to make a final medical determination. If the first and second physicians do not agree in their assessment they must try to resolve their differences. If they cannot reach an agreement then they must designate a third physician to resolve the dispute.

The employer must provide examining and consulting physicians with the following specific information: A copy of the lead regulations and all appendices, a description of the employee's duties as related to exposure, the exposure level or anticipated level to lead and any other toxic substances (if applicable), a description of personal protective equipment used, blood lead levels, and all prior written medical opinions regarding the employee in the employer's possession or control. The employer must also obtain from the physician and provide the employee with a written medical opinion containing blood lead levels, the physician’s opinion as to whether the employee is at risk of material impairment to health, any recommended protective measures for the employee if further exposure is permitted, as well as any recommended limitations upon an employee's use of respirators.

Employers must instruct each physician not to reveal to the employer in writing or in any other way their findings, laboratory results, or diagnoses which are felt to be unrelated to occupational lead exposure. They must also instruct each physician to advise the employee of any occupationally or non-occupationally related medical condition requiring further treatment or evaluation.

The standard provides for the use of respirators where engineering and other primary controls are not effective. However, the use of respirator protection shall not be used in lieu of temporary medical removal due to elevated blood lead levels or findings that an employee is at risk of material health impairment. This is based on the numerous inadequacies of respirators including skin rash where the facepiece makes contact with the skin, unacceptable stress to breathing in some workers with underlying cardiopulmonary impairment, difficulty in providing adequate fit, the tendency for respirators to create additional hazards by interfering with vision, hearing, and mobility, and the difficulties of assuring the maximum effectiveness of a complicated work practice program involving respirators. Respirators do, however, serve a useful function where engineering and work practice controls are inadequate by providing supplementary, interim, or short-term protection, provided they are properly selected for the environment in which the employee will be working, properly fitted to the employee, maintained and cleaned periodically, and worn by the employee when required.

In its standard on occupational exposure to inorganic lead in the construction industry, WISHA has prohibited prophylactic chelation. Diagnostic and therapeutic chelation are permitted only under the supervision of a licensed physician with appropriate medical monitoring in an acceptable clinical setting.

WAC 296-155-17654 (Cont.)

The decision to initiate chelation therapy must be made on an individual basis and take into account the severity of symptoms felt to be a result of lead toxicity along with blood lead levels, ZPP levels, and other laboratory tests as appropriate. EDTA and penicillamine which are the primary chelating agents used in the therapy of occupational lead poisoning have significant potential side effects and their use must be justified on the basis of expected benefits to the worker. Unless frank and severe symptoms are present, therapeutic chelation is not recommended, given the opportunity to remove a worker from exposure and allow the body to naturally excrete accumulated lead. As a diagnostic aid, the chelation mobilization test using CA-EDTA has limited applicability. According to some investigators, the test can differentiate between lead-induced and other nephropathies. The test may also provide an estimation of the mobile fraction of the total body lead burden.

Employers are required to assure that accurate records are maintained on exposure assessment, including environmental monitoring, medical surveillance, and medical removal for each employee. Exposure assessment records must be kept for at least 30 years. Medical surveillance records must be kept for the duration of employment plus 30 years except in cases where the employment was less than one year. If duration of employment is less than one year, the employer need not retain this record beyond the term of employment if the record is provided to the employee upon termination of employment. Medical removal records also must be maintained for the duration of employment. All records required under the standard must be made available upon request to the director. Employers must also make environmental and biological monitoring and medical removal records available to affected employees and to former employees or their authorized employee representatives. Employees or their specifically designated representatives have access to their entire medical surveillance records.

In addition, the standard requires that the employer inform all workers exposed to lead at or above 30 $\mu g/m^3$ of the provisions of the standard and all its appendices, the purpose and description of medical surveillance and provisions for medical removal protection if temporary removal is required. An understanding of the potential health effects of lead exposure by all exposed employees along with full understanding of their rights under the lead standard is essential for an effective monitoring program.

(3) Adverse health effects of inorganic lead.

Although the toxicity of lead has been known for 2,000 years, the knowledge of the complex relationship between lead exposure and human response is still being refined. Significant research into the toxic properties of lead continues throughout the world, and it should be anticipated that our understanding of thresholds of effects and margins of safety will be improved in future years. The provisions of the lead standard are founded on two prime medical judgments: First, the prevention of adverse health effects from exposure to lead throughout a working lifetime requires that worker blood lead levels be maintained at or below 40 µg/dl and second, the blood lead levels of workers, male or female, who intend to parent in the near future should be maintained below 30 µg/dl to minimize adverse reproductive health effects to the parents and developing fetus. The adverse effects of lead on reproduction are being actively researched and WISHA encourages the physician to remain abreast of recent developments in the area to best advise pregnant workers or workers planning to conceive children.

The spectrum of health effects caused by lead exposure can be subdivided into five developmental stages: Normal, physiological changes of uncertain significance, pathophysiological changes, overt symptoms (morbidity), and mortality. Within this process there are no sharp distinctions, but rather a continuum of effects. Boundaries between categories overlap due to the wide variation of individual responses and exposures in the working population. WISHA's development of the lead standard focused on pathophysiological changes as well as later stages of disease.

WAC 296-155-17654 (Cont.)

(a) Heme synthesis inhibition. The earliest demonstrated effect of lead involves its ability to inhibit at least two enzymes of the heme synthesis pathway at very low blood levels. Inhibition of delta aminolevulinic acid dehydrase (ALA-D) which catalyzes the conversion of delta-aminolevulinic acid (ALA) to protoporphyrin is observed at a blood lead level below 20 µg/dl. At a blood lead level of 40 µg/dl, more than 20% of the population would have 70% inhibition of ALA-D. There is an exponential increase in ALA excretion at blood lead levels greater than 40 µg/dl.

Another enzyme, ferrochelatase, is also inhibited at low blood lead levels. Inhibition of ferrochelatase leads to increased free erythrocyte protoporphyrin (FEP) in the blood which can then bind to zinc to yield zinc protoporphyrin. At a blood lead level of 50 µg/dl or greater, nearly 100% of the population will have an increase in FEP. There is also an exponential relationship between blood lead levels greater than 40 µg/dl and the associated ZPP level, which has led to the development of the ZPP screening test for lead exposure.

While the significance of these effects is subject to debate, it is WISHA's position that these enzyme disturbances are early stages of a disease process which may eventually result in the clinical symptoms of lead poisoning. Whether or not the effects do progress to the later stages of clinical disease, disruption of these enzyme processes over a working lifetime is considered to be a material impairment of health.

One of the eventual results of lead-induced inhibition of enzymes in the heme synthesis pathway is anemia which can be asymptomatic if mild but associated with a wide array of symptoms including dizziness, fatigue, and tachycardia when more severe. Studies have indicated that lead levels as low as 50 µg/dl can be associated with a definite decreased hemoglobin, although most cases of lead-induced anemia, as well as shortened red-cell survival times, occur at lead levels exceeding 80 µg/dl. Inhibited hemoglobin synthesis is more common in chronic cases whereas shortened erythrocyte life span is more common in acute cases.

In lead-induced anemias, there is usually a reticulocytosis along with the presence of basophilic stippling, and ringed sideroblasts, although none of the above are pathognomonic for lead-induced anemia.

(b) Neurological effects. Inorganic lead has been found to have toxic effects on both the central and peripheral nervous systems. The earliest stages of lead-induced central nervous system effects first manifest themselves in the form of behavioral disturbances and central nervous system symptoms including irritability, restlessness, insomnia and other sleep disturbances, fatigue, vertigo, headache, poor memory, tremor, depression, and apathy. With more severe exposure, symptoms can progress to drowsiness, stupor, hallucinations, delirium, convulsions and coma.

The most severe and acute form of lead poisoning which usually follows ingestion or inhalation of large amounts of lead is acute encephalopathy which may arise precipitously with the onset of intractable seizures, coma, cardiorespiratory arrest, and death within 48 hours.

While there is disagreement about what exposure levels are needed to produce the earliest symptoms, most experts agree that symptoms definitely can occur at blood lead levels of 60 µg/dl whole blood and therefore recommend a 40 µg/dl maximum. The central nervous system effects frequently are not reversible following discontinued exposure or chelation therapy and when improvement does occur, it is almost always only partial.

WAC 296-155-17654 (Cont.)

The peripheral neuropathy resulting from lead exposure characteristically involves only motor function with minimal sensory damage and has a marked predilection for the extensor muscles of the most active extremity. The peripheral neuropathy can occur with varying degrees of severity. The earliest and mildest form which can be detected in workers with blood lead levels as low as 50 μg/dl is manifested by slowing of motor nerve conduction velocity often without clinical symptoms. With progression of the neuropathy there is development of painless extensor muscle weakness usually involving the extensor muscles of the fingers and hand in the most active upper extremity, followed in severe cases by wrist drop or, much less commonly, foot drop.

In addition to slowing of nerve conduction, electromyographical studies in patients with blood lead levels greater than 50 μg/dl have demonstrated a decrease in the number of acting motor unit potentials, an increase in the duration of motor unit potentials, and spontaneous pathological activity including fibrillations and fasciculations. Whether these effects occur at levels of 40 μg/dl is undetermined.

While the peripheral neuropathies can occasionally be reversed with therapy, again such recovery is not assured particularly in the more severe neuropathies and often improvement is only partial. The lack of reversibility is felt to be due in part to segmental demyelination.

(c) Gastrointestinal. Lead may also affect the gastrointestinal system producing abdominal colic or diffuse abdominal pain, constipation, obstipation, diarrhea, anorexia, nausea and vomiting. Lead colic rarely develops at blood lead levels below 80 μg/dl.

(d) Renal. Renal toxicity represents one of the most serious health effects of lead poisoning. In the early stages of disease nuclear inclusion bodies can frequently be identified in proximal renal tubular cells. Renal function remains normal and the changes in this stage are probably reversible. With more advanced disease there is progressive interstitial fibrosis and impaired renal function. Eventually extensive interstitial fibrosis ensues with sclerotic glomeruli and dilated and atrophied proximal tubules; all represent end stage kidney disease. Azotemia can be progressive, eventually resulting in frank uremia necessitating dialysis. There is occasionally associated hypertension and hyperuricemia with or without gout.

Early kidney disease is difficult to detect. The urinalysis is normal in early lead nephropathy and the blood urea nitrogen and serum creatinine increase only when two-thirds of kidney function is lost. Measurement of creatinine clearance can often detect earlier disease as can other methods of measurement of glomerular filtration rate. An abnormal Ca-EDTA mobilization test has been used to differentiate between lead-induced and other nephropathies, but this procedure is not widely accepted. A form of Fanconi syndrome with aminoaciduria, glycosuria, and hyperphosphaturia indicating severe injury to the proximal renal tubules is occasionally seen in children.

(e) Reproductive effects. Exposure to lead can have serious effects on reproductive function in both males and females. In male workers exposed to lead there can be a decrease in sexual drive, impotence, decreased ability to produce healthy sperm, and sterility. Malformed sperm (teratospermia), decreased number of sperm (hypospermia), and sperm with decreased motility (asthenospermia) can all occur. Teratospermia has been noted at mean blood lead levels of 53 μg/dl and hypospermia and asthenospermia at 41 μg/dl. Furthermore, there appears to be a dose-response relationship for teratospermia in lead exposed workers.

WAC 296-155-17654 (Cont.)

Women exposed to lead may experience menstrual disturbances including dysmenorrhea, menorrhagia and amenorrhea. Following exposure to lead, women have a higher frequency of sterility, premature births, spontaneous miscarriages, and stillbirths.

Germ cells can be affected by lead and cause genetic damage in the egg or sperm cells before conception and result in failure to implant, miscarriage, stillbirth, or birth defects.

Infants of mothers with lead poisoning have a higher mortality during the first year and suffer from lowered birth weights, slower growth, and nervous system disorders.

Lead can pass through the placental barrier and lead levels in the mother's blood are comparable to concentrations of lead in the umbilical cord at birth. Transplacental passage becomes detectable at 12-14 weeks of gestation and increases until birth.

There is little direct data on damage to the fetus from exposure to lead but it is generally assumed that the fetus and newborn would be at least as susceptible to neurological damage as young children. Blood lead levels of 50-60 μg/dl in children can cause significant neurobehavioral impairments and there is evidence of hyperactivity at blood levels as low as 25 μg/dl. Given the overall body of literature concerning the adverse health effects of lead in children, WISHA feels that the blood lead level in children should be maintained below 30 μg/dl with a population mean of 15 μg/dl. Blood lead levels in the fetus and newborn likewise should not exceed 30 μg/dl.

Because of lead's ability to pass through the placental barrier and also because of the demonstrated adverse effects of lead on reproductive function in both the male and female as well as the risk of genetic damage of lead on both the ovum and sperm, WISHA recommends a 30 μg/dl maximum permissible blood lead level in both males and females who wish to bear children.

(f) Other toxic effects. Debate and research continue on the effects of lead on the human body. Hypertension has frequently been noted in occupationally exposed individuals although it is difficult to assess whether this is due to lead's adverse effects on the kidney or if some other mechanism is involved. Vascular and electrocardiographic changes have been detected but have not been well characterized. Lead is thought to impair thyroid function and interfere with the pituitary-adrenal axis, but again these effects have not been well defined.

(4) Medical evaluation.

The most important principle in evaluating a worker for any occupational disease including lead poisoning is a high index of suspicion on the part of the examining physician. As discussed in section (3), lead can affect numerous organ systems and produce a wide array of signs and symptoms, most of which are non-specific and subtle in nature at least in the early stages of disease. Unless serious concern for lead toxicity is present, many of the early clues to diagnosis may easily be overlooked.

The crucial initial step in the medical evaluation is recognizing that a worker's employment can result in exposure to lead. The worker will frequently be able to define exposures to lead and lead containing materials but often will not volunteer this information unless specifically asked. In other situations the worker may not know of any exposures to lead but the suspicion might be raised on the part of the physician because of the industry or occupation of the worker. Potential occupational exposure to lead and its compounds occur in many occupations in the construction industry, including demolition and

WAC 296-155-17654 (Cont.)

salvaging operations, removal or encapsulation of materials containing lead, construction, alteration, repair or renovation of structures containing lead, transportation, disposal, storage or containment of lead or lead-containing materials on construction sites, and maintenance operations associated with construction activities.

Once the possibility for lead exposure is raised, the focus can then be directed toward eliciting information from the medical history, physical exam, and finally from laboratory data to evaluate the worker for potential lead toxicity.

A complete and detailed work history is important in the initial evaluation. A listing of all previous employment with information on job description, exposure to fumes or dust, known exposures to lead or other toxic substances, a description of any personal protective equipment used, and previous medical surveillance should all be included in the worker's record. Where exposure to lead is suspected, information concerning on-the-job personal hygiene, smoking or eating habits in work areas, laundry procedures, and use of any protective clothing or respiratory protection equipment should be noted. A complete work history is essential in the medical evaluation of a worker with suspected lead toxicity, especially when long term effects such as neurotoxicity and nephrotoxicity are considered.

The medical history is also of fundamental importance and should include a listing of all past and current medical conditions, current medications including proprietary drug intake, previous surgeries and hospitalizations, allergies, smoking history, alcohol consumption, and also non-occupational lead exposures such as hobbies (hunting, riflery). Also known childhood exposures should be elicited. Any previous history of hematological, neurological, gastrointestinal, renal, psychological, gynecological, genetic, or reproductive problems should be specifically noted.

A careful and complete review of systems must be performed to assess both recognized complaints and subtle or slowly acquired symptoms which the worker might not appreciate as being significant. The review of symptoms should include the following:

- General-weight loss, fatigue, decreased appetite.
- Head, eyes, ears, nose, throat (HEENT)-headaches, visual disturbances or decreased visual acuity, hearing deficits or tinnitus, pigmentation of the oral mucosa, or metallic taste in mouth.
- Cardio-pulmonary-shortness of breath, cough, chest pains, palpitations, or orthopnea.
- Gastrointestinal-nausea, vomiting, heartburn, abdominal pain, constipation or diarrhea.
- Neurologic-irritability, insomnia, weakness (fatigue), dizziness, loss of memory, confusion, hallucinations, incoordination, ataxia, decreased strength in hands or feet, disturbances in gait, difficulty in climbing stairs, or seizures.
- Hematologic-pallor, easy fatigability, abnormal blood loss, melena.
- Reproductive (male and female and spouse where relevant)-history of infertility, impotence, loss of libido, abnormal menstrual periods, history of miscarriages, stillbirths, or children with birth defects.
- Musculo-skeletal-muscle and joint pains.

The physical examination should emphasize the neurological, gastrointestinal, and cardiovascular systems. The worker's weight and blood pressure should be recorded and the oral mucosa checked for pigmentation characteristic of a possible Burtonian or lead line on the gingiva. It should be noted, however, that the lead line may not be present even in severe lead poisoning if good oral hygiene is practiced.

WAC 296-155-17654 (Cont.)

The presence of pallor on skin examination may indicate an anemia which, if severe, might also be associated with a tachycardia. If an anemia is suspected, an active search for blood loss should be undertaken including potential blood loss through the gastrointestinal tract.

A complete neurological examination should include an adequate mental status evaluation including a search for behavioral and psychological disturbances, memory testing, evaluation for irritability, insomnia, hallucinations, and mental clouding. Gait and coordination should be examined along with close observation for tremor. A detailed evaluation of peripheral nerve function including careful sensory and motor function testing is warranted. Strength testing particularly of extensor muscle groups of all extremities is of fundamental importance.

Cranial nerve evaluation should also be included in the routine examination.

The abdominal examination should include auscultation for bowel sounds and abdominal bruits and palpation for organomegaly, masses, and diffuse abdominal tenderness.

Cardiovascular examination should evaluate possible early signs of congestive heart failure. Pulmonary status should be addressed particularly if respirator protection is contemplated.

As part of the medical evaluation, the lead standard requires the following laboratory studies:

- Blood lead level.
- Hemoglobin and hematocrit determinations, red cell indices, and examination of the peripheral blood smear to evaluate red blood cell morphology.
- Blood urea nitrogen.
- Serum creatinine.
- Routine urinalysis with microscopic examination.
- A zinc protoporphyrin level.

In addition to the above, the physician is authorized to order any further laboratory or other tests which they deem necessary in accordance with sound medical practice. The evaluation must also include pregnancy testing or laboratory evaluation of male fertility if requested by the employee. Additional tests which are probably not warranted on a routine basis but may be appropriate when blood lead and ZPP levels are equivocal include delta aminolevulinic acid and coproporphyrin concentrations in the urine, and dark-field illumination for detection of basophilic stippling in red blood cells.

If an anemia is detected further studies including a careful examination of the peripheral smear, reticulocyte count, stool for occult blood, serum iron, total iron binding capacity, bilirubin, and, if appropriate, vitamin B12 and folate may be of value in attempting to identify the cause of the anemia.

If a peripheral neuropathy is suspected, nerve conduction studies are warranted both for diagnosis and as a basis to monitor any therapy.

If renal disease is questioned, a 24 hour urine collection for creatinine clearance, protein, and electrolytes may be indicated. Elevated uric acid levels may result from lead-induced renal disease and a serum uric acid level might be performed.

An electrocardiogram and chest x-ray may be obtained as deemed appropriate.

Sophisticated and highly specialized testing should not be done routinely and where indicated should be under the direction of a specialist.

WAC 296-155-17654 (Cont.)

(5) Laboratory evaluation.

The blood lead level at present remains the single most important test to monitor lead exposure and is the test used in the medical surveillance program under the lead standard to guide employee medical removal. The ZPP has several advantages over the blood lead level. Because of its relatively recent development and the lack of extensive data concerning its interpretation, the ZPP currently remains an ancillary test.

This section will discuss the blood lead level and ZPP in detail and will outline their relative advantages and disadvantages. Other blood tests currently available to evaluate lead exposure will also be reviewed.

The blood lead level is a good index of current or recent lead absorption when there is no anemia present and when the worker has not taken any chelating agents. However, blood lead levels along with urinary lead levels do not necessarily indicate the total body burden of lead and are not adequate measures of past exposure. One reason for this is that lead has a high affinity for bone and up to 90% of the body's total lead is deposited there. A very important component of the total lead body burden is lead in soft tissue (liver, kidney, and brain). This fraction of the lead body burden, the biologically active lead, is not entirely reflected by blood lead levels since it is a function of the dynamics of lead absorption, distribution, deposition in bone and excretion. Following discontinuation of exposure to lead, the excess body burden is only slowly mobilized from bone and other relatively stable body stores and excreted. Consequently, a high blood lead level may only represent recent heavy exposure to lead without a significant total body excess and likewise a low blood lead level does not exclude an elevated total body burden of lead.

Also due to its correlation with recent exposures, the blood lead level may vary considerably over short time intervals.

To minimize laboratory error and erroneous results due to contamination, blood specimens must be carefully collected after thorough cleaning of the skin with appropriate methods using lead-free blood containers and analyzed by a reliable laboratory. Under the standard, samples must be analyzed in laboratories which are approved by OSHA. Analysis is to be made using atomic absorption spectrophotometry, anodic stripping voltammetry or any method which meets the accuracy requirements set forth by the standard.

The determination of lead in urine is generally considered a less reliable monitoring technique than analysis of whole blood primarily due to individual variability in urinary excretion capacity as well as the technical difficulty of obtaining accurate 24 hour urine collections. In addition, workers with renal insufficiency, whether due to lead or some other cause, may have decreased lead clearance and consequently urine lead levels may underestimate the true lead burden. Therefore, urine lead levels should not be used as a routine test.

The zinc protoporphyrin test, unlike the blood lead determination, measures an adverse metabolic effect of lead and as such is a better indicator of lead toxicity than the level of blood lead itself. The level of ZPP reflects lead absorption over the preceding 3 to 4 months, and therefore is a better indicator of lead body burden. The ZPP requires more time than the blood lead to read significantly elevated levels; the return to normal after discontinuing lead exposure is also slower. Furthermore, the ZPP test is simpler, faster, and less expensive to perform and no contamination is possible. Many investigators believe it is the most reliable means of monitoring chronic lead absorption.

WAC 296-155-17654 (Cont.)

Zinc protoporphyrin results from the inhibition of the enzyme ferrochelatase which catalyzes the insertion of an iron molecule into the protoporphyrin molecule, which then becomes heme. If iron is not inserted into the molecule then zinc, having a greater affinity for protoporphyrin, takes the place of the iron, forming ZPP.

An elevation in the level of circulating ZPP may occur at blood lead levels as low as 20-30 µg/dl in some workers. Once the blood lead level has reached 40 µg/dl there is more marked rise in the ZPP value from its normal range of less than 100 µg/dl 100 ml. Increases in blood lead levels beyond 40 µg/100 g are associated with exponential increases in ZPP.

Whereas blood lead levels fluctuate over short time spans, ZPP levels remain relatively stable. ZPP is measured directly in red blood cells and is present for the cell's entire 120 day life-span. Therefore, the ZPP level in blood reflects the average ZPP production over the previous 3-4 months and consequently the average lead exposure during that time interval.

It is recommended that a hematocrit be determined whenever a confirmed ZPP of 50 µg/100 ml whole blood is obtained to rule out a significant underlying anemia. If the ZPP is in excess of 100 µg/100 ml and not associated with abnormal elevations in blood lead levels, the laboratory should be checked to be sure that blood leads were determined using atomic absorption spectrophotometry anodic stripping voltammetry, or any method which meets the accuracy requirements set forth by the standard by an OSHA approved laboratory which is experienced in lead level determinations. Repeat periodic blood lead studies should be obtained in all individuals with elevated ZPP levels to be certain that an associated elevated blood lead level has not been missed due to transient fluctuations in blood leads.

ZPP has a characteristic fluorescence spectrum with a peak at 594 nm which is detectable with a hematofluorimeter. The hematofluorimeter is accurate and portable and can provide on-site, instantaneous results for workers who can be frequently tested via a finger prick.

Careful attention must be given to calibration and quality control procedures. Limited data on blood lead-ZPP correlations and the ZPP levels which are associated with the adverse health effects discussed in subsection (3) are the major limitations of the test. Also it is difficult to correlate ZPP levels with environmental exposure and there is some variation of response with age and sex. Nevertheless, the ZPP promises to be an important diagnostic test for the early detection of lead toxicity and its value will increase as more data is collected regarding its relationship to other manifestations of lead poisoning.

Levels of delta-aminolevulinic acid (ALA) in the urine are also used as a measure of lead exposure. Increasing concentrations of ALA are believed to result from the inhibition of the enzyme delta-aminolevulinic acid dehydrase (ALA-D). Although the test is relatively easy to perform, inexpensive, and rapid, the disadvantages include variability in results, the necessity to collect a complete 24 hour urine sample which has a specific gravity greater than 1.010, and also the fact that ALA decomposes in the presence of light.

The pattern of porphyrin excretion in the urine can also be helpful in identifying lead intoxication. With lead poisoning, the urine concentrations of coproporphyrins I and II, porphobilinogen and uroporphyrin I rise. The most important increase, however, is that of coproporphyrin III; levels may exceed 5,000 µg/l in the urine in lead poisoned individuals, but its correlation with blood lead levels and ZPP are not as good as those of ALA. Increases in urinary porphyrins are not diagnostic of lead toxicity and may be seen in porphyria, some liver diseases, and in patients with high reticulocyte counts.

WAC 296-155-17654 (Cont.)

Summary. The Washington Industrial Safety and Health Act's standard for inorganic lead in the construction industry places significant emphasis on the medical surveillance of all workers exposed to levels of inorganic lead above 30 $\mu g/m^3$ TWA. The physician has a fundamental role in this surveillance program, and in the operation of the medical removal protection program.

Even with adequate worker education on the adverse health effects of lead and appropriate training in work practices, personal hygiene and other control measures, the physician has a primary responsibility for evaluating potential lead toxicity in the worker. It is only through a careful and detailed medical and work history, a complete physical examination and appropriate laboratory testing that an accurate assessment can be made. Many of the adverse health effects of lead toxicity are either irreversible or only partially reversible and therefore early detection of disease is very important.

This document outlines the medical monitoring program as defined by the occupational safety and health standard for inorganic lead. It reviews the adverse health effects of lead poisoning and describes the important elements of the history and physical examinations as they relate to these adverse effects. Finally, the appropriate laboratory testing for evaluating lead exposure and toxicity is presented.

It is hoped that this review and discussion will give the physician a better understanding of the WISHA standard with the ultimate goal of protecting the health and well-being of the worker exposed to lead under their care.

[Statutory Authority: Chapter 49.17 RCW. 93-22-054 (Order 93-07), § 296-155-17654, filed 10/29/93, effective 12/10/93.]

PART B-2
HAZARD COMMUNICATION

WAC 296-155-180 Hazard communication. General. The employer shall develop and maintain a chemical hazard communication program as required by WAC 296-800-170, which will provide information to all employees relative to hazardous chemicals or substances to which they are exposed, or may become exposed, in the course of their employment.

[Statutory Authority: RCW 49.17.010, .040, .050. 01-11-038 (Order 99-36), § 296-155-180, filed 05/09/01, effective 09/01/01. Statutory Authority: Chapter 49.17 RCW. 94-16-145, § 296-155-180, filed 8/3/94, effective 9/12/94; 89-11-035 (Order 89-03), § 296-155-180, filed 5/15/89, effective 6/30/89.]

PART C
PERSONAL PROTECTIVE AND LIFE SAVING EQUIPMENT

WAC 296-155-200 General requirements.

(1) Application.

(a) Protective equipment, including personal protective equipment for eyes, face, head, hearing, and extremities, protective clothing, respiratory devices, and protective shields and barriers, shall be used, and maintained in a sanitary and reliable condition wherever it is necessary by reason of hazards of processes or environment, chemical hazards, radiological hazards, or mechanical irritants encountered in a manner capable of causing injury or impairment in the function of any part of the body through absorption, inhalation or physical contact.

(b) Employee owned equipment. Where employees provide their own protective equipment, the employer shall be responsible to assure its adequacy, including proper maintenance and sanitation of such equipment.

(c) Design. All personal protective equipment shall be of safe design and construction for the work to be performed.

(2) Construction personnel shall comply with plant or job safety practices and procedures, peculiar to particular industries and plants, relating to protective equipment and procedures when engaged in construction work in such plants or job sites.

(3) The employer is responsible for requiring the wearing of appropriate personal protective equipment in all operations where there is an exposure to hazardous conditions or where this part indicates a need for using such equipment to reduce the hazards to the employees.

(4) Where there is a danger of contact with moving parts of machinery, or the work process is such that a hazard exists:

(a) The clothing of employees shall fit closely about the body.

(b) Dangling neck wear, bracelets, wristwatches, rings, or similar articles shall not be worn by employees.

(5) Employees, whose duties are performed in areas and under circumstances where they are exposed to the danger of moving vehicles, shall wear work vests of highly visible materials, or equivalent distinguishing apparel.

(6) Employers shall ensure that employees wear no less than a short sleeved shirt, long pants, and shoes. Employees shall wear no less than a short sleeved shirt, long pants, and shoes. Shoes shall meet the requirements of WAC 296-155-212.

Note: For additional personal protective and life saving equipment requirements, refer to WAC 296-800-160.

[Statutory Authority: RCW 49.17.010, .040, .050. 01-11-038 (Order 99-36), § 296-155-200, filed 05/09/01, effective 09/01/01. Statutory Authority: Chapter 49.17 RCW. 94-15-096 (Order 94-07), § 296-155-200, filed 7/20/94, effective 9/20/94. Statutory Authority: RCW 49.17.040 and 49.17.050. 86-03-074 (Order 86-14), § 296-155-200, filed 1/21/86; Order 76-29, § 296-155-200, filed 9/30/76; Order 74-26, § 296-155-200, filed 5/7/74, effective 6/6/74.]

WAC 296-155-201 Definitions applicable to this chapter.

(1) **"Catenary life line"** means a horizontal rope between two fixed anchorages, independent of the work surface, to which the lanyard is attached, either by tying or by means of a sliding connection. A catenary life line shall be capable of supporting a minimum dead weight of 5,400 pounds per person, applied at the midpoint of the line.

(2) **"Contaminant"** means any material which by reason of its action upon, within, or to a person or object is likely to cause physical harm.

(3) **"Dropline"** means a vertical rope from a fixed anchorage, independent of the work surface, to which the lanyard is affixed or tied.

(4) **"Fixed anchorage"** means a secure point of attachment, not a part of the work surface, for droplines, lifelines, catenary life lines, or lanyards. The fixed anchorage and its appurtenances shall be capable of supporting a minimum dead weight of 5,400 pounds per worker.

(5) **"Lanyard"** means a rope, suitable for supporting one person. One end is fastened to a safety belt or harness and the other end is secured to a substantial object or a safety line.

(6) **"Lifeline"** means a rope, suitable for supporting one person, to which a lanyard or safety belt (or harness) is attached.

(7**)** **"O.D."** means optical density and refers to the light refractive characteristics of a lens.

(8) **"Radiant energy"** means energy that travels outward in all directions from its source.

(9**)** **"Safety belt"** means a device, usually worn around the waist which, by reason of its attachment to a lanyard and lifeline or a structure, will prevent a worker from falling**.**

[Statutory Authority: RCW 49.17.040 and 49.17.050. 86-03-074 (Order 86-14), § 296-155-201, filed 1/21/86; Order 76-6, § 296-155-201, filed 3/1/76.]

WAC 296-155-203 Confined spaces. All work conducted in a confined space shall comply with the provisions of chapter 296-62 WAC Part M, and the following sections.

[Statutory Authority: Chapter 49.17 RCW. 94-15-096 (Order 94-07), § 296-155-203, filed 7/20/94, effective 9/20/94. Statutory Authority: RCW 49.17.040 and 49.17.050. 86-03-074 (Order 86-14), § 296-155-203, filed 1/21/86.]

WAC 296-155-20301 Definitions. "**Confined space"** means a space that:

(1) Is large enough and so configured that an employee can bodily enter and perform assigned work; and

(2) Has limited or restricted means for entry or exit (for example, tanks, vessels, silos, storage bins, hoppers, vaults, and pits are spaces that may have limited means of entry); and

(3) Is not designed for continuous employee occupancy.

"Corrosives" means substances which in contact with living tissue cause destruction of the tissue by chemical action.

"Hazardous atmosphere" means an atmosphere that may expose employees to the risk of death, incapacitation, impairment of ability to self-rescue (that is, escape unaided from a permit space), injury, or acute illness from one or more of the following causes:

WAC 296-155-20301 (Cont.)

(1) Flammable gas, vapor, or mist in excess of ten percent of its lower flammable limit (LFL);

(2) Airborne combustible dust at a concentration that meets or exceeds its LFL;

Note: This concentration may be approximated as a condition in which the dust obscures vision at a distance of five feet (1.52m) or less.

(3) Atmospheric oxygen concentration below 19.5 percent or above 23.5 percent;

(4) Atmospheric concentration of any substance for which a dose or a permissible exposure limit is published in chapter 296-62 WAC, general occupational health standards, and which could result in employee exposure in excess of its dose or permissible exposure limit;

Note: An atmospheric concentration of any substance that is not capable of causing death, incapacitation, impairment of ability to self-rescue, injury, or acute illness due to its health effects is not covered by this provision.

(5) Any other atmospheric condition that is immediately dangerous to life or health.

Note: For air contaminants for which WISHA has not determined a dose or permissible exposure limit, other sources of information, such as material safety data sheets that comply with the chemical hazard communication standard, WAC 296-800-170, published information, and internal documents can provide guidance in establishing acceptable atmospheric conditions.

"Irritants" means substances which on immediate, prolonged, or repeated contact with normal living tissue will induce a local inflammatory reaction.

"Oxygen deficient atmospheres" means atmospheres at sea level having less than 19.5% oxygen by volume or having a partial pressure of 148 millimeters of mercury or less. This may deviate when working at higher altitudes and should be determined for an individual location. Factors such as acclimatization, physical condition of persons involved, etc., must be considered for such circumstances and conditions. (See chapter 296-62 WAC, Part M, permit-required confined spaces.)

"**Toxicants"** means substances which have the inherent capacity to produce personal injury or illness to persons by absorption through any body surface.

[Statutory Authority: RCW 49.17.010, .040, .050. 01-11-038 (Order 99-36), § 296-155-20301, filed 05/09/01, effective 09/01/01. Statutory Authority: Chapter 49.17 RCW. 95-17-036 (Order 95-04), 296-155-20301, filed 8/9/95, effective 9/25/95; 95-04-007, § 296-155-20301, filed 1/18/95, effective 3/1/95; 91-24-017 (Order 91-07), § 296-155-20301, filed 11/22/91, effective 12/24/91. Statutory Authority: RCW 49.17.040 and 49.17.050. 86-03-074 (Order 86-14), § 296-155-20301, filed 1/21/86.]

WAC 296-155-20307 Confined space work on sewer systems under construction. New systems under construction or new installations which have not yet been connected to a used system, may substitute forced ventilation for the testing requirements of chapter 296-62 WAC Part M provided:

(1) Ventilation is effectively provided at least five minutes prior to entry into the confined space;

(2) Ventilation is provided, as required by WAC 296-62-110, et seq., which supplies a continuous flow of air;

(3) Ventilation exhaust is discharged so as to present no hazard to other employees;

WAC 296-155-20307 (Cont.)

(4) An attendant is provided at the surface when there are employees in the manhole or pipe. The attendant shall not leave the manhole unattended until such time as all employees are out and the cover has been replaced; and

(5) All other requirements for confined spaces are observed. See chapter 296-62 WAC Part M.

[Statutory Authority: Chapter 49.17 RCW. 94-15-096 (Order 94-07), § 296-155-20307, filed 7/20/94, effective 9/20/94. Statutory Authority: RCW 49.17.040 and 49.17.050. 86-03-074 (Order 86-14), § 296-155-20307, filed 1/21/86.]

WAC 296-155-205 Head protection.

(1) All employees on any construction site shall be provided an individual hard hat which meets all requirements of (a) and (b) of this subsection. Employers shall provide individual hard hats at no cost to the employees.

(a) Hard hats for the protection of employees against impact and/or penetration of falling and flying objects shall meet the specifications contained in American National Standards Institute, Z89.1-1969, Safety Requirements for Industrial Head Protection.

(b) Hard hats for the head protection of employees exposed to high voltage electrical shock and burns shall meet the specifications contained in American National Standards Institute, Z89.2-1971.

(2) All employees must have their individual hard hats on site and readily available at all times.

(3) All employees shall wear a hard hat on any construction site whenever there is a potential exposure to danger of flying or falling objects to persons working or occupying the area.

Note: The hard hat may be removed whenever there is no potential exposure to a hazard.

(4) (a) Employees working on asphalt paving crews exposed to extreme temperatures from hot mix and not exposed to falling objects do not have to wear protective hard hats.

(b) Flaggers working with asphalt paving operations must comply with the requirements of WAC 296-155-305.

(5) Caps with metal buttons or metal visors shall not be worn around electrical hazards.

(6) Employees working near moving machinery or in locations which present a hair-catching or fire hazard shall wear caps, nets or other head and face protection that will completely contain the hair.

[Statutory Authority: RCW 49.17.010, .040, .050; Chapter 239, Laws of 2000 (ESHB 2647); and Chapter 34.05 RCW. 01-04-015 (Order 00-03), § 296-155-205, filed 01/26/01, effective 02/28/01. Statutory Authority: Chapter 49.17 RCW. 91-11-070 (Order 91-01), § 296-155-205, filed 5/20/91, effective 6/20/91; 89-11-035 (Order 89-03), § 296-155-205, filed 5/15/89, effective 6/30/89. Statutory Authority: RCW 49.17.040 and 49.17.050. 86-03-074 (Order 86-14), § 296-155-205, filed 1/21/86; Order 74-26, § 296-155-205, filed 5/7/74, effective 6/6/74.]

WAC 296-155-210 Hearing protection. The hearing protection requirements of the general occupational health standards, chapter 296-62 WAC, shall apply.

[Statutory Authority: RCW 49.17.040 and 49.17.050. 83-24-013 (Order 83-34), § 296-155-210, filed 11/30/83; Order 74-26, § 296-155-210, filed 5/7/74, effective 6/6/74.]

WAC 296-155-211 Leg protection. Employees whose duties require them to operate a power chain saw shall wear flexible ballistic nylon pads, sewn or otherwise fastened into the trousers, or other equivalent protection that will protect the vulnerable areas of the legs.

[Statutory Authority: RCW 49.17.040 and 49.17.050. 86-03-074 (Order 86-14), § 296-155-211, filed 1/21/86.]

WAC 296-155-212 Foot protection.

(1) Substantial footwear, made of leather or other equally firm material, shall be worn by employees in any occupation in which there is a danger of injury to the feet through falling or moving objects, or from burning, scalding, cutting, penetration, or like hazard.

(a) The soles and heels of such footwear shall be of a material that will not create a slipping hazard.

(b) Shoes made of leather or other firm materials that have soft athletic-type soles which would protect employees from foot injuries and at the same time, provide soft and firm footing while working under specialty requirements or with specialty materials are acceptable if meeting safety shoe requirements established by OSHA or ANSI.

(c) Footwear that has deteriorated to a point where it does not provide the required protection shall not be used.

(2) Calks or other suitable footwear, which will afford reasonable protection from slipping, shall be worn while working on logs, poles, pilings, or similar forest products.

(3) Traditional tennis shoes, shoes with canvas tops, or thin or soft soled athletic shoes, open toed sandals, slippers, dress shoes or other similar type shoes shall not be worn. Soft or athletic-type soles with uppers of leather or other substantial material may be used where firm footing is desired and where minimal danger of injury to feet from falling or moving objects.

(4) Safety-toe footwear for employees shall meet the requirements and specifications in American National Standard for Men's Safety-Toe Footwear, Z41.1-1967.

[Statutory Authority: Chapter 49.17 RCW. 94-15-096 (Order 94-07), § 296-155-212, filed 7/20/94, effective 9/20/94; 89-11-035 (Order 89-03), § 296-155-212, filed 5/15/89, effective 6/30/89. Statutory Authority: RCW 49.17.040 and 49.17.050. 86-03-074 (Order 86-14), § 296-155-212, filed 1/21/86; Order 74-26, § 296-155-212, filed 5/7/74, effective 6/6/74.]

WAC 296-155-215 Eye and face protection.

(1) General.

(a) Employees shall use eye and face protection equipment when machines or operations present potential eye or face injury from physical, chemical, or radiation agents.

(b) Eye and face protection equipment required by this part shall meet the requirements specified in American National Standards Institute, Z87.1-1968, Practice for Occupational and Educational Eye and Face Protection.

(c) Employees whose vision requires the use of corrective lenses in spectacles, when required by this regulation to wear eye protection, shall be protected by goggles or spectacles of one of the following types:

(i) Spectacles whose protective lenses provide optical correction;

(ii) Goggles that can be worn over corrective spectacles without disturbing the adjustment of the spectacles.

(iii) Goggles that incorporate corrective lenses mounted behind the protective lenses.

(d) Face and eye protection equipment shall be kept clean and in good repair. The use of this type equipment with structural or optical defects shall be prohibited.

WAC 296-155-215 (Cont.)

(e) Table C-1 shall be used as a guide in the selection of face and eye protection for the hazards and operations noted.

(f) Protectors shall meet the following minimum requirements:

(i) They shall provide adequate protection against the particular hazards for which they are designed.

(ii) They shall be reasonably comfortable when worn under the designated conditions.

(iii) They shall fit snugly and shall not unduly interfere with the movements of the wearer.

(iv) They shall be durable.

(v) They shall be capable of being disinfected.

(vi) They shall be easily cleanable.

(g) Every protector shall be distinctly marked to facilitate identification only of the manufacturer.

(h) When limitations or precautions are indicated by the manufacturer, they shall be transmitted to the user and care taken to see that such limitations and precautions are strictly observed.

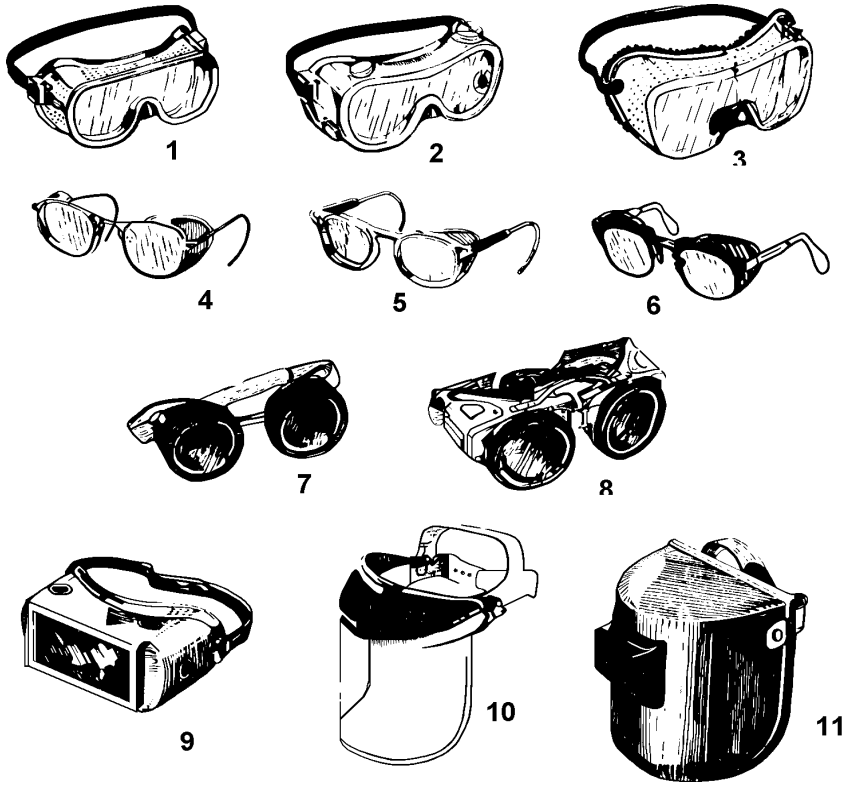

WAC 296-155-215 (Cont.)

TABLE C-1
EYE AND FACE PROTECTION SELECTION GUIDE

1.	GOGGLES, flexible fitting, regular ventilation
2.	GOGGLES, flexible fitting, hooded ventilation
3.	GOGGLES, cushioned fitting, rigid body
*4.	SPECTACLES, metal frame, with sideshields
*5.	SPECTACLES, plastic frame with sideshields
*6.	SPECTACLES, metal-plastic frame, with sideshields
**7.	WELDING GOGGLES, eyecup type, tinted lenses (illustrated)
7A.	CHIPPING GOGGLES, eyecup type, clear safety lenses (not illustrated)
**8.	WELDING GOGGLES, coverspec type tinted lenses (illustrated)
8A.	CHIPPING GOGGLES, coverspec type, clear safety lenses (not illustrated)
**9.	WELDING GOGGLES, coverspec type, tinted plate lens
10.	FACE SHIELD (available with plastic or mesh window)
11.	WELDING HELMETS
*	Nonside shield spectacles are available for limited hazard use requiring only frontal protection.
**	See Table C-2 in (2) of this section, Filter lens shade numbers for protection against radiant energy.

Applications

OPERATION	HAZARDS	RECOMMENDED PROTECTORS: Underscored Numbers Signify Preferred Protection
ACETYLENE-BURNING ACETYLENE-CUTTING ACETYLELE-WELDING	SPARKS, HARMFUL RAYS, MOLTEN METAL, FLYING PARTICLES	7,8,9
CHEMICAL HANDLING	SPLASH, ACID BURNS, FUMES	2,10 (for severe exposure and 10 over 2)
CHIPPING ELECTRIC (ARC) WELDING	FLYING PARTICLES SPARKS, INTENSE RAYS, MOULTEN METAL	1,3,4,5,6,7A, 8A 9,11 (11 in combination with 4,5,6 in tinted lenses, advisable)
FURNACE OPERATIONS	GLARE, HEAT MOLTEN METAL	7,8,9 (for severe exposure add 10)

WAC 296-155-215 (Cont.)

Applications (Cont.)

GRINDING LIGHT	FLYING PARTICLES	1,3,4,5,6,10
GRINDING HEAVE	FLYING PARTICLES	1,3,7A, 8A (for severe exposure add 10)
LABORATORY	CHEMICAL SPLASH GLASS BREAKAGE	2 (10 when in combination with 4,5,6)
MACHINING	FLYING PARTICLES	1,3,4,5,6,10
MOLTEN METALS	HEAT, GLARE SPARKS, SPLASH	7,8 (10 in combination with 4,5,6, in tinted lenses)
SPOT WELDING	FLYING PARTICLES SPARKS	1,3,4,5,6,10

(2) Protection against radiant energy. (a) Selection of shade numbers for welding filter. Table C-2 shall be used as a guide for the selection of the proper shade numbers of filter lenses or plates used in welding. Shades more dense than those listed may be used to suit the individual's needs.

TABLE C-2
FILTER LENS SHADE NUMBERS FOR PROTECTION AGAINST RADIANT ENERGY

Welding Operation	Shade Number
Shielded metal-arc welding 1/16-, 3/32-, 1/8-, 5/32-inch diameter electrodes	10
Gas-shielded arc welding (nonferrous) 1/16-, 3/32-, 1/8-, 5/32-inch diameter electrodes	11
Gas shielded arc welding (ferrous) 1/16-, 3/32-, 1/8-, 5/32-inch diameter electrodes	12
Shielded metal-arc welding 3/16-, 7/32-, 1/4-inch diameter electrodes	12
5/15-, 3/8-inch diameter electrodes	14
Atomic hydrogen welding	10-14
Carbon-arc welding	14
Soldering	2
Torch brazing	3 or 4
Light cutting, up to 1 inch	3 or 4
Medium cutting, 1 inch to 6 inches	4 or 5
Heavy cutting, over 6 inches	5 or 6
Gas welding (light), up to 1/8 inch	4 or 5
Gas welding (medium), 1/8 inch to 1/2 inch	5 or 6
Gas welding (heavy), over ½ inch	6 or 9

WAC 296-155-215 (Cont.)

(b) Laser protection.

(i) Employees whose occupation or assignment requires potentially hazardous exposure (see WAC 296-62-09005(4)) to laser radiation shall wear suitable laser safety goggles which will protect for the specific wavelength of the laser and be of optical density (O.D.) adequate for the energy involved. Table C-3 lists the maximum power or energy density for which adequate protection is afforded by glasses of optical densities from 5 through 8.

TABLE C-3
SELECTING LASER SAFETY GLASS

INTENSITY		ATTENUATION
CW maximum power density (watts/cm2)	Optical Density (O.D.)	Attenuation factor
10.2	5	105
10.1	6	106
1.0	7	107
10.0	8	108

Output levels falling between lines in this table shall require the higher optical density.

(ii) All protective goggles shall bear a label identifying the following data:

(a) The laser wavelengths for which use is intended;

(b) The optical density of those wavelengths.

(c) The visible light transmission.

[Statutory Authority: Chapter 49.17 RCW. 94-15-096 (Order 94-07), § 296-155-215, filed 7/20/94, effective 9/20/94. Statutory Authority: RCW 49.17.040 and 49.17.050. 85-01-022 (Order 84-24), § 296-155-215, filed 12/11/84; Order 74-26, § 296-155-215, filed 5/7/74, effective 6/6/74.]

WAC 296-155-220 Respiratory protection. The respiratory protection requirements applicable to construction work under this section are identical to those set forth in chapter 296-62 WAC, Part E.

[Statutory Authority: RCW 49.17.010, .040, .050. 99-10 (Order 98-10), § 296-155-220, filed 05/04/99, effective 09/01/99. Statutory Authority: RCW 49.17.040 and 49.17.050. 83-15-017 (Order 83-19), § 296-155-220, filed 7/13/83, effective 9/12/83; Order 74-26, § 296-155-220, filed 5/7/74, effective 6/6/74.]

WAC 296-155-235 Working over or adjacent to water.

(1) When an employee is employed under conditions which expose them to a risk of drowning, they shall wear a U.S. Coast Guard approved life saving device, unless it can be shown that conditions, such as shallow water, are such that flotation would not be achieved.

(2) Prior to and after each use, the buoyant life saving device shall be inspected for defects which would alter their strength or buoyancy. Defective units shall not be used.

(3) Ring buoys with at least 90 feet of line shall be provided and readily available for emergency rescue operations. Distance between ring buoys shall not exceed 200 feet.

WAC 296-155-235 (Cont.)

(4) At least one lifesaving skiff shall be immediately available at locations where employees are working over or adjacent to water. Each skiff, or skiffs, shall:

(a) Be suitable for conditions where used.

(b) Be equipped with oar locks securely attached to gunwales, oars, one boat hook, and one cork ring buoy with fifty feet of suitable line attached.

(5) Whenever boats or skiffs cannot be used, due to swift currents, life lines close to the water surface shall be provided and, wherever practicable, a line shall be stretched across the stream with tag lines.

(6) Where workers are transported by boat or barge, only such number of persons shall be carried that can be safely accommodated on fixed seats. Capacity showing number of persons shall be plainly marked on vessel.

(7) All workers shall be provided with a U.S. Coast Guard approved buoyant life saving device while transported in open boats and/or barges, and where deemed necessary by the department, workers shall wear same while in transport.

[Statutory Authority: Chapter 49.17 RCW. 94-15-096 (Order 94-07), § 296-155-235, filed 7/20/94, effective 9/20/94; Order 74-26, § 296-155-235, filed 5/7/74, effective 6/6/74.]

WAC 296-155-240 Sterilization of protective equipment. Goggles, gloves, respirators and other protectors shall not be interchanged among employees for use unless they have been thoroughly cleaned since last use.
[Order 74-26, § 296-155-240, filed 5/7/74, effective 6/6/74.]

PART C-1
FALL RESTRAINT AND FALL ARREST

WAC 296-155-245 Reserved.

[Statutory Authority: Chapter 49.17 RCW. 96-24-051, (Order 96-05), § 296-155-245, filed 11/27/96, effective 02/01/97. 95-10-016, § 296-155-245, filed 4/25/95, effective 10/1/95.]

WAC 296-155-24501 Scope and application.

This section sets forth requirements for employers to provide and enforce the use of fall protection for employees in construction, alteration, repair, maintenance (including painting and decorating), demolition workplaces, and material handling covered under chapter 296-155 WAC.

Note: See Appendix B for additional standards that require the use of fall restraint and/or fall arrest protection.

[Statutory Authority: RCW 49.17.010, .040,.050. 00-14-058, (Order 99-43), § 296-155-24501, filed 07/03/2000, effective 10/01/2000. Statutory Authority: Chapter 49.17 RCW. 96-24-051, (Order 96-05), § 296-155-24501, filed 11/27/96, effective 02/01/97. 95-10-016, § 296-155-24501, filed 4/25/95, effective 10/1/95; 91-03-044 (Order 90-18), § 296-155-24501, filed 1/10/91, effective 2/12/91.]

WAC 296-155-24503 Definitions.

"Anchorage" means a secure point of attachment for lifelines, lanyards, or deceleration devices which is capable of withstanding the forces specified in the applicable sections of chapter 296-155 WAC.

"Approved" means, for the purpose of this section; tested and certified by the manufacturer, or any recognized national testing laboratory, to possess the strength requirements specified in this section.

"Body belt" means a Type 1 safety belt used in conjunction with lanyard or lifeline for fall restraint only.

"Full body harness" means a configuration of connected straps to distribute a fall arresting force over at least the thighs, shoulders and pelvis, with provisions for attaching a lanyard, lifeline, or deceleration devices.

"Full body harness system" means a Class III full body harness and lanyard which is attached to an anchorage meeting the requirements of chapter 296-155 WAC, Part C-1; or attached to a horizontal or vertical lifeline which is properly secured to an anchorage(s) capable of withstanding the forces specified in the applicable sections of chapter 296-155 WAC.

"Catenary line" - see horizontal lifeline.

"Competent person" means an individual knowledgeable of fall protection equipment, including the manufacturers recommendations and instructions for the proper use, inspection, and maintenance; and who is capable of identifying existing and potential fall hazards; and who has the authority to take prompt corrective action to eliminate those hazards; and who is knowledgeable of the rules contained in this section regarding the erection, use, inspection, and maintenance of fall protection equipment and systems.

"Connector" means a device which is used to couple (connect) parts of the personal fall arrest system and positioning device systems together. It may be an independent component of the system, such as a carabiner, or it may be an integral component of part of the system (such as a buckle or dee ring sewn into a body belt or body harness, or a snap hook spliced or sewn to a lanyard or self-retracting lanyard).

"Continuous fall protection" means the design and use of a fall protection system such that no exposure to an elevated fall hazard occurs. This may require more than one fall protection system or a combination of prevention or protection measures.

"Control zone" means the area between the warning line and the unprotected sides and edges of the walking/working surface.

WAC 296-155-24503 (Cont.)

"Deceleration device" means any mechanism, such as a rope grab, ripstitch lanyard, specifically woven lanyard, tearing or deforming lanyards, automatic self-retracting lifelines/lanyards, etc., which serves to dissipate a substantial amount of energy during a fall arrest, or otherwise limit the energy imposed on an employee during fall arrest.

"Deceleration distance" means the additional vertical distance a falling employee travels, excluding lifeline elongation and free fall distance, before stopping, from the point at which the deceleration device begins to operate. It is measured as the distance between the location of an employee's body belt or body harness attachment point at the moment of activation (at the onset of fall arrest forces) of the deceleration device during a fall, and the location of that attachment point after the employee comes to a full stop.

"Drop line" means a vertical lifeline secured to an upper anchorage for the purpose of attaching a lanyard or device.

"Failure" means load refusal, breakage, or separation of component parts. Load refusal is the point where the ultimate strength is exceeded.

"Fall arrest system" means the use of multiple, approved safety equipment components such as; body harnesses, lanyards, deceleration devices, droplines, horizontal and/or vertical lifelines and anchorages, interconnected and rigged as to arrest a free fall. Compliance with anchorage strength requirements specified in the applicable sections of chapter 296-155 WAC, Part C-1 shall constitute approval of the anchorage.

"Fall protection work plan" means a written planning document in which the employer identifies all areas on the job site where a fall hazard of 10 feet or greater exists. The plan describes the method or methods of fall protection to be utilized to protect employees, and includes the procedures governing the installation use, inspection, and removal of the fall protection method or methods which are selected by the employer. (See WAC 296-155-24505.)

"Fall restraint system" means an approved device and any necessary components that function together to restrain an employee in such a manner as to prevent that employee from falling to a lower level. When standard guardrails are selected, compliance with applicable sections governing their construction and use shall constitute approval.

"Fall distance" means the actual distance from the workers support to the level where a fall would stop.

"Free fall" means the act of falling before a personal fall arrest system begins to apply force to arrest the fall.

"Free fall distance" means the vertical displacement of the fall arrest attachment point on the employee's body belt or body harness between onset of the fall and just before the system begins to apply force to arrest the fall. This distance excludes deceleration distance, and lifeline/lanyard elongation, but includes any deceleration device slide distance or self-retracting lifeline/lanyard extension before they operate and fall arrest forces occur.

"Hardware" means snap hooks, D rings, bucklers, carabiners, adjusters, O rings, that are used to attach the components of a fall protection system together.

"Horizontal lifeline" means a rail, rope, wire, or synthetic cable that is installed in a horizontal plane between two anchorages and used for attachment of a workers lanyard or lifeline device while moving horizontally; used to control dangerous pendulum like swing falls.

"Lanyard" means a flexible line of webbing, rope, or cable used to secure a body belt or harness to a lifeline or an anchorage point usually 2, 4, or 6 feet long.

WAC 296-155-24503 (Cont.)

"Leading edge" means the advancing edge of a floor, roof, or formwork which changes location as additional floor, roof, or formwork sections are placed, formed, or constructed. Leading edges not actively under construction are considered to be "unprotected sides and edges, and positive methods of fall arrest or fall restraint shall be required to protect exposed workers.

"Lifeline" means a vertical line from a fixed anchorage or between two horizontal anchorages, independent of walking or working surfaces, to which a lanyard or device is secured. Lifeline as referred to in this text is one which is part of a fall protection system used as back-up safety for an elevated worker.

"Locking snap hook" means a connecting snap hook that requires two separate forces to open the gate; one to deactivate the gatekeeper and a second to depress and open the gate which automatically closes when released; used to minimize roll out or accidental disengagement.

"Low pitched roof" means a roof having a slope equal to or less than 4 in 12.

"Mechanical equipment" means all motor or human propelled wheeled equipment except for wheelbarrows, mopcarts, robotic thermoplastic welders and robotic crimpers.

"Positioning belt" means a single or multiple strap that can be secured around the workers body to hold the user in a work position; for example, a linemans belt, a rebar belt, or saddle belt.

"Positioning device system" means a body belt or body harness system rigged to allow an employee to be supported on an elevated vertical surface, such as a wall, and work with both hands free while leaning.

"Restraint line" means a line from a fixed anchorage or between two anchorages to which an employee is secured in such a way as to prevent the worker from falling to a lower level.

"Roll out" means unintentional disengagement of a snap hook caused by the gate being depressed under torque or contact while twisting or turning; a particular concern with single action snap hooks that do not have a locking gatekeeper.

"Roof" means the exterior surface on the top of a building. This does not include floors or form work which, because a building has not been completed, temporarily become the top surface of a building.

"Roofing work" means the hoisting, storage, application, and removal of roofing materials and equipment, including related insulation, sheet metal, and vapor barrier work, but not including the construction of the roof deck.

"Rope grab" means a fall arrester that is designed to move up or down a lifeline suspended from a fixed overhead or horizontal anchorage point, or lifeline, to which the belt or harness is attached. In the event of a fall, the rope grab locks onto the lifeline rope through compression to arrest the fall. The use of a rope grab device is restricted for all restraint applications. (Refer to WAC 296-155-24510 (1)(b)(iii)).

"Safety line" - see lifeline.

"Safety monitor system" means a system of fall restraint used in conjunction with a warning line system only, where a competent person as defined by this part, having no additional duties, monitors the proximity of workers to the fall hazard when working between the warning line and the unprotected sides and edges including, the leading edge of a low pitched roof or walking/working surface.

WAC 296-155-24503 (Cont.)

"Self retracting lifeline" means a deceleration device which contains a drum wound line which may be slowly extracted from, or retracted onto, the drum under slight tension during normal employee movement, and which after onset of a fall, automatically locks the drum and arrests the fall.

"Shock absorbing lanyard" means a flexible line of webbing, cable, or rope used to secure a body belt or harness to a lifeline or anchorage point that has an integral shock absorber.

"Single action snap hook" means a connecting snap hook that requires a single force to open the gate which automatically closes when released.

"Snap hook" means a self-closing connecting device with a gatekeeper latch or similar arrangement that will remain closed until manually opened. This includes single action snap hooks that open when the gatekeeper is depressed and double action snap hooks that require a second action on a gatekeeper before the gate can be opened.

"Static line" - see horizontal lifeline.

"Strength member" means any component of a fall protection system that could be subject to loading in the event of a fall.

"Steep roof" means a roof having a slope greater than 4 in 12.

"Unprotected sides and edges" means any side or edge (except at entrances to points of access) of a floor, roof, ramp or runway where there is no wall or guardrail system as defined in WAC 296-155-505(7).

"Walking/working surface" means for the purpose of this section, any area whose dimensions are 45 inches or greater in all directions, through which workers pass or conduct work.

"Warning line system" means a barrier erected on a walking and working surface or a low pitch roof (4 in 12 or less), to warn employees that they are approaching an unprotected fall hazard(s).

"Work area" means that portion of a walking/working surface where job duties are being performed.
[Statutory Authority: RCW 49.17.010, .040, .050. 00-14-058 (Order 99-43), § 296-155-24503, filed 07/03/2000, effective 10/01/2000. Statutory Authority: Chapter 49.17 RCW. 96-24-051, (Order 96-05), § 296-155-24503, filed 11/27/96, effective 02/01/97. 95-10-016, § 296-155-24503, filed 4/25/95, effective 10/1/95; 91-03-044 (Order 90-18), § 296-155-24503, filed 1/10/91, effective 2/12/91.]

WAC 296-155-24505 Fall protection work plan.

(1) The employer shall develop and implement a written fall protection work plan including each area of the work place where the employees are assigned and where fall hazards of 10 feet or more exist.

(2) The fall protection work plan shall:

(a) Identify all fall hazards in the work area.

(b) Describe the method of fall arrest or fall restraint to be provided.

(c) Describe the correct procedures for the assembly, maintenance, inspection, and disassembly of the fall protection system to be used.

(d) Describe the correct procedures for the handling, storage, and securing of tools and materials.

WAC 296-155-24505 (Cont.)

(e) Describe the method of providing overhead protection for workers who may be in, or pass through the area below the work site.

(f) Describe the method for prompt, safe removal of injured workers.

(g) Be available on the job site for inspection by the department.

(3) Prior to permitting employees into areas where fall hazards exist the employer shall:

(a) Ensure that employees are trained and instructed in the items described in subsection (2)(a) through (f) of this section.

(b) Inspect fall protection devices and systems to ensure compliance with WAC 296-155-24510.

(4) Training of employees:

(a) The employer shall ensure that employees are trained as required by this section. Training shall be documented and shall be available on the job site.

(b) "Retraining." When the employer has reason to believe that any affected employee who has already been trained does not have the understanding and skill required by subsection (1) of this section, the employer shall retrain each such employee. Circumstances where retraining is required include, but are not limited to, situations where:

- Changes in the workplace render previous training obsolete; or
- Changes in the types of fall protection systems or equipment to be used render previous training obsolete; or
- Inadequacies in an affected employee's knowledge or use of fall protection systems or equipment indicate that the employee has not retained the requisite understanding or skill.

Note: The following appendices to Part C-1 of this chapter serve as nonmandatory guidelines to assist employers in complying with the appropriate requirements of Part C-1 of this chapter.

[Statutory Authority: RCW 49.17.010, .040, .050. 00-14-058 (Order 99-43), § 296-155-24505, filed 07/03/00, effective 10/01/00. Statutory Authority: Chapter 49.17 RCW. 96-24-051, (Order 96-05), § 296-155-24505, filed 11/27/96, effective 02/01/97. 95-10-016, § 296-155-24505, filed 4/25/95, effective 10/1/95; 91-03-044 (Order 90-18), § 296-155-24505, filed 1/10/91, effective 2/12/91.]

WAC 296-155-24507 Reserved.

[Statutory Authority: 96-24-051, (Order 96-05), § 296-155-24507, filed 11/27/96, effective 02/01/97. 95-10-016, § 296-155-24507, filed 4/25/95, effective 10/1/95.]

WAC 296-155-24510 Fall restraint, fall arrest systems.

When employees are exposed to a hazard of falling from a location 10 feet or more in height, the employer shall ensure that fall restraint, fall arrest systems or positioning device systems are provided, installed, and implemented according to the following requirements.

WAC 296-155-24510 (Cont.)

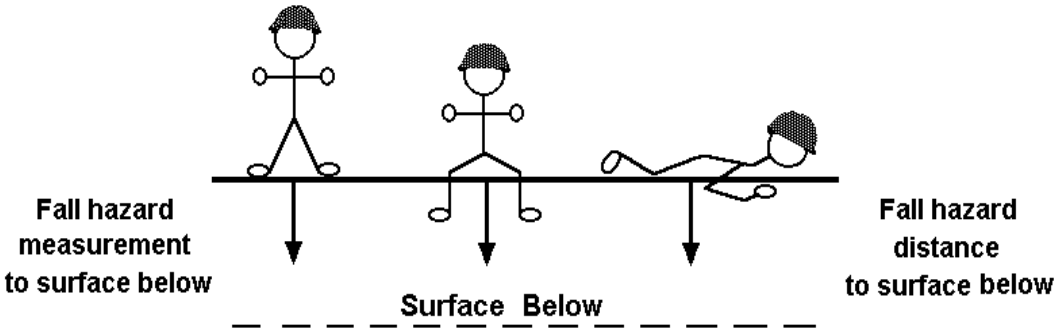

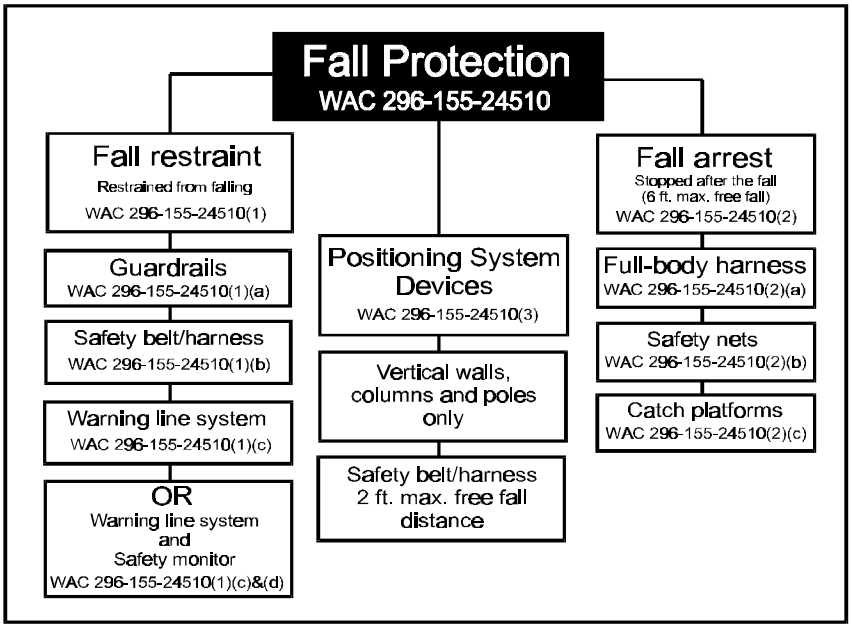

(1) Fall restraint protection shall consist of:

(a) Standard guardrails as described in chapter 296-155 WAC, Part K.

(b) Safety belts and/or harness attached to securely rigged restraint lines.

(i) Safety belts and/or harness shall conform to ANSI Standard:

Class I body belt

Class II chest harness

Class III full body harness

Class IV suspension/position belt

(ii) All safety belt and lanyard hardware assemblies shall be capable of withstanding a tensile loading of 4,000 pounds without cracking, breaking, or taking a permanent deformation.

WAC 296-155-24510 (Cont.)

(iii) Rope grab devices are prohibited for fall restraint applications unless they are part of a fall restraint system designed specifically for the purpose by the manufacturer, and used in strict accordance with the manufacturers recommendations and instructions.

(iv) The employer shall ensure component compatibility.

(v) Components of fall restraint systems shall be inspected prior to each use for mildew, wear, damage, and other deterioration, and defective components shall be removed from service if their function or strength have been adversely affected.

(vi) Anchorage points used for fall restraint shall be capable of supporting 4 times the intended load.

(vii) Restraint protection shall be rigged to allow the movement of employees only as far as the sides and edges of the walking/working surface.

(c) A warning line system as prescribed in WAC 296-155-24515(3) and supplemented by the use of a safety monitor system as prescribed in WAC 296-155-24521 to protect workers engaged in duties between the forward edge of the warning line and the unprotected sides and edges, including the leading edge, of a low pitched roof or walking/working surface.

(d) Warning line and safety monitor systems as described in WAC 296-155-24515 (3) through (4)(f) and WAC 296-155-24520 respectively are prohibited on surfaces exceeding a 4 in 12 pitch, and on any surface whose dimensions are less than 45 inches in all directions.

(2) Fall arrest protection shall consist of:

(a) Full body harness system.

(i) An approved Class III full body harness shall be used.

(ii) Body harness systems or components subject to impact loading shall be immediately removed from service and shall not be used again for employee protection unless inspected and determined by a competent person to be undamaged and suitable for reuse.

(iii) All safety lines and lanyards shall be protected against being cut or abraded.

(iv) The attachment point of the body harness shall be located in the center of the wearer's back near shoulder level, or above the wearer's head.

(v) Body harness systems shall be rigged to minimize free fall distance with a maximum free fall distance allowed of 6 feet, and such that the employee will not contact any lower level.

(vi) Hardware shall be drop forged, pressed or formed steel, or made of materials equivalent in strength.

(vii) Hardware shall have a corrosion resistant finish, and all surfaces and edges shall be smooth to prevent damage to the attached body harness or lanyard.

(viii) When vertical lifelines (droplines) are used, not more than one employee shall be attached to any one lifeline.

WAC 296-155-24510 (Cont.)

Note: The system strength needs in the following items are based on a total combined weight of employee and tools of no more than 310 pounds. If combined weight is more than 310 pounds, appropriate allowances must be made or the system will not be deemed to be in compliance.

(ix) Full body harness systems shall be secured to anchorages capable of supporting 5,000 pounds per employee except: When self retracting lifelines or other deceleration devices are used which limit free fall to two feet, anchorages shall be capable of withstanding 3,000 pounds.

(x) Vertical lifelines (droplines) shall have a minimum tensile strength of 5,000 pounds (22.2 kN), except that self retracting lifelines and lanyards which automatically limit free fall distance to two feet (.61 m) or less shall have a minimum tensile strength of 3,000 pounds (13.3 kN).

(xi) Horizontal lifelines shall be designed, installed, and used, under the supervision of a qualified person, as part of a complete personal fall arrest system, which maintains a safety factor of at least two.

(xii) Lanyards shall have a minimum tensile strength of 5,000 pounds (22.2 kN).

(xiii) All components of body harness systems whose strength is not otherwise specified in this subsection shall be capable of supporting a minimum fall impact load of 5,000 pounds (22.2 kN) applied at the lanyard point of connection.

(xiv) Dee-rings and snap-hooks shall be proof-tested to a mininum tensile load of 3,600 pounds (16 kN) without cracking, breaking, or taking permanent deformation.

(xv) Snap-hooks shall be a locking type snap-hook designed and used to prevent disengagement of the snap-hook by the contact of the snap-hook keeper by the connected member.

(xvi) Unless the snap-hook is designed for the following connections, snap-hooks shall not be engaged:

(A) Directly to the webbing, rope or wire rope;

(B) To each other;

(C) To a dee-ring to which another snap-hook or other connector is attached;

(D) To a horizontal lifeline; or

(E) To any object which is incompatibly shaped or dimensioned in relation to the snap-hook such that unintentional disengagement could occur by the connected object being able to depress the snap-hook keeper and release itself.

(xvii) Full body harness systems shall be inspected prior to each use for mildew, wear, damage, and other deterioration, and defective components shall be removed from service if their function or strength have been adversely affected.

WAC 296-155-24510 (Cont.)

(b) Safety net systems. Safety net systems and their use shall comply with the following provisions:

(i) Safety nets shall be installed as close as practicable under the surface on which employees are working, but in no case more than 30 feet (9.1 m) below such level unless specifically approved in writing by the manufacturer. The potential fall area to the net shall be unobstructed.

(ii) Safety nets shall extend outward from the outermost projection of the work surface as follows:

Vertical distance from working levels to horizontal plane of net	Minimum required horizontal distance of outer edge of net from the edge of the working surface
Up to 5 feet	8 feet
More than 5 feet up to 10 feet	10 feet
More than 10 feet	13 feet

(iii) Safety nets shall be installed with sufficient clearance under them to prevent contact with the surface or structures below when subjected to an impact force equal to the drop test specified in (b)(iv) of this subsection.

(iv) Safety nets and their installations shall be capable of absorbing an impact force equal to that produced by the drop test specified in (b)(iv)(A) and (B) of this subsection.

(A) Except as provided in (b)(iv)(B) of this subsection, safety nets and safety net installations shall be drop-tested at the job site after initial installation and before being used as a fall protection system, whenever relocated, after major repair, and at 6-month intervals if left in one place. The drop-test shall consist of a 400 pound (180 kg) bag of sand 30 ñ2 inches (76 ± 5 cm) in diameter dropped into the net from the highest walking/working surface at which employees are exposed to fall hazards, but not from less than 42 inches (1.1 m) above that level.

(B) When the employer can demonstrate that it is unreasonable to perform the drop-test required by (b)(iv)(A) of this subsection, the employer (or a designated competent person) shall certify that the net and net installation is in compliance with the provisions of (b)(iii) and (b)(iv)(A) of this subsection by preparing a certification record prior to the net being used as a fall protection system. The certification record must include an identification of the net and net installation for which the certification record is being prepared; the date that it was determined that the identified net and net installation were in compliance with (b)(iii) of this subsection and the signature of the person making the determination and certification. The most recent certification record for each net and net installation shall be available at the job site for inspection.

(v) Defective nets shall not be used. Safety nets shall be inspected at least once a week for wear, damage, and other deterioration. Defective components shall be removed from

service. Safety nets shall also be inspected after any occurrence which could affect the integrity of the safety net system.

WAC 296-155-24510 (Cont.)

(vi) Materials, scrap pieces, equipment, and tools which have fallen into the safety net shall be removed as soon as possible from the net and at least before the next work shift.

(vii) The maximum size of each safety net mesh opening shall not exceed 36 square inches (230 cm2) nor be longer than 6 inches (15 cm) on any side, and the opening, measured center-to-center of mesh ropes or webbing, shall not be longer than 6 inches (15 cm). All mesh crossings shall be secured to prevent enlargement of the mesh opening.

(viii) Each safety net (or section of it) shall have a border rope for webbing with an minimum breaking strength of 5,000 pounds (22.2 kN).

(ix) Connections between safety net panels shall be as strong as integral net components and shall be spaced not more than 6 inches (15 cm) apart.

(c) Catch platforms.

(i) A catch platform shall be installed within 10 vertical feet of the work area.

(ii) The catch platforms width shall equal the distance of the fall but shall be a minimum of 45 inches wide and shall be equipped with standard guardrails on all open sides.

(3) Positioning device systems. Positioning device systems and their use shall conform to the following provisions:

(a) Positioning devices shall be rigged such that an employee cannot free fall more than 2 feet (.61 m).

(b) Positioning devices shall be secured to an anchorage capable of supporting at least twice the potential impact load of an employee's fall or 3,000 pounds (13.3 kN), whichever is greater.

(c) Connectors shall be drop forged, pressed or formed steel, or made of equivalent materials.

(d) Connectors shall have a corrosion-resistant finish, and all surfaces and edges shall be smooth to prevent damage to interfacing parts of this system.

(e) Connecting assemblies shall have a minimum tensile strength of 5,000 pounds (22.2 kN).

(f) Dee-rings and snap-hooks shall be proof-tested to a minimum tensile load of 3,600 pounds (16 kN) without cracking, breaking, or taking permanent deformation.

(g) Snap-hooks shall be a locking type snap-hook designed and used to prevent disengagement of the snap-hook by the contact of the snap-hook keeper by the connected member.

(h) Unless the snap-hook is designed for the following connections, snap-hooks shall not be engaged:

(i) Directly to webbing, rope or wire rope;

(ii) To each other;

(iii) To a dee-ring to which another snap-hook or other connector is attached;

(iv) To a horizontal lifeline; or

WAC 296-155-24510 (Cont.)

(v) To any object which is incompatibly shaped or dimensioned in relation to the snap-hook such that unintentional disengagement could occur by the connected object being able to depress the snap-hook keeper and release itself.

(i) Positioning device systems shall be inspected prior to each use for wear, damage, and other deterioration, and defective components shall be removed from service.

(j) Body belts, harnesses, and components shall be used only for employee protection (as part of a personal fall arrest system or positioning device system) and not to hoist materials.

(4) Droplines or lifelines used on rock scaling operations, or in areas where the lifeline may be subjected to cutting or abrasion, shall be a minimum of 7/8 inch wire core manila rope. For all other lifeline applications, a minimum of 3/4 inch manila or equivalent, with a minimum breaking strength of 5,000 pounds, shall be used.

(5) Safety harnesses, lanyards, lifelines or droplines, independently attached or attended, shall be used while performing the following types of work when other equivalent type protection is not provided:

(a) Work performed in permit required confined spaces and other confined spaces shall follow the procedures as described in chapter 296-62 WAC, Part M.

(b) Work on hazardous slopes, or dismantling safety nets, working on poles or from boatswains chairs at elevations greater than six feet (1.83 m), swinging scaffolds or other unguarded locations.

(c) Work on skips and platforms used in shafts by crews when the skip or cage does not occlude the opening to within one foot (30.5 cm) of the sides of the shaft, unless cages are provided.

(6) Canopies, when used as falling object protection, shall be strong enough to prevent collapse and to prevent penetration by any objects which may fall onto the canopy.

[Statutory Authority: RCW 49.17.010, .040, .050. 00-14-058 (Order 99-43), § 296-155-24510, filed 07/03/2000, effective 10/01/2000. Statutory Authority: Chapter 49.17 RCW. 96-24-051, (Order 96-05), § 296-155-24510, filed 11/27/96, effective 02/01/97. 95-10-016, § 296-155-24510, filed 4/25/95, effective 10/1/95; 95-04-007, § 296-155-24510, filed 1/18/95, effective 3/1/95; 93-19-142 (Order 93-04), § 296-155-24510, filed 9/22/93, effective 11/1/93; 91-24-017 (Order 91-07), § 296-155-24510, filed 11/22/91, effective 12/24/91; 91-03-044 (Order 90-18), § 296-155-24510, filed 1/10/91, effective 2/12/91.]

WAC 296-155-24515 Guarding of low pitched roof perimeters.

(1) General provisions. During the performance of work on low pitched roofs with a potential fall hazard greater than 10 feet, the employer shall ensure that employees engaged in such work be protected from falling from all unprotected sides and edges of the roof as follows:

(a) By the use of a fall restraint or fall arrest systems, as defined in WAC 296-155-24510; or

(b) By the use of a warning line system erected and maintained as provided in subsection (3) of this section and supplemented for employees working between the warning line and the roof edge by the use of a safety monitor system as described in WAC 296-155-24521.

(c) Mechanical equipment shall be used or stored only in areas where employees are protected by a warning line system, or fall restraint, or fall arrest systems as described in WAC 296-155-24510. Mechanical equipment may not be used or stored where the only protection is provided by the use of a safety monitor.

WAC 296-155-24515 (Cont.)

(2) Exceptions.

(a) The provisions of subsection (1)(a) of this section do not apply at points of access such as stairways, ladders, and ramps, or when employees are on the roof only to inspect, investigate, or estimate roof level conditions. Roof edge materials handling areas and materials storage areas shall be guarded as provided in subsection (4) of this section.

(b) Employees engaged in roofing on low-pitched roofs less than 50 feet wide, may elect to use a safety monitor system without warning lines.

Note: See Appendix A to Part C-1--Determining roof widths nonmandatory guidelines for complying with WAC 296-155-24515(2)(b).

(3) Warning lines systems.

(a) Warning lines shall be erected around all sides of the work area.

(i) When mechanical equipment is not being used, the warning line shall be erected not less than six feet (1.8 meters) from the edge of the roof.

(ii) When mechanical equipment is being used, the warning line shall be erected not less than six feet (1.8 meters) from the roof edge which is parallel to the direction of mechanical equipment operation, and not less than 10 feet (3.1 meters) from the roof edge which is perpendicular to the direction of mechanical equipment operation.

(b) The warning line shall consist of a rope, wire, or chain and supporting stanchions erected as follows:

(i) The rope, wire, or chain shall be flagged at not more than six foot (1.8 meter) intervals with high visibility material.

(ii) The rope, wire, or chain shall be rigged and supported in such a way that its lowest point (including sag) is no less than 36 inches (91.4 cm) from the roof surface and its highest point is no more than 42 inches (106.7 cm) from the roof surface.

(iii) After being erected, with the rope, wire or chain attached, stanchions shall be capable of resisting, without tipping over, a force of at least 16 pounds (71 Newtons) applied horizontally against the stanchion, 30 inches (0.76 meters) above the roof surface, perpendicular to the warning line, and in the direction of the roof edge.

(iv) The rope, wire, or chain shall have a minimum tensile strength of 200 pounds (90 kilograms), and after being attached to the stanchions, shall be capable of supporting, without breaking, the loads applied to the stanchions.

(v) The line shall be attached at each stanchion in such a way that pulling on one section of the line between stanchions will not result in slack being taken up in adjacent sections before the stanchion tips over.

(c) Access paths shall be erected as follows:

(i) Points of access, materials handling areas, and storage areas shall be connected to the work area by a clear access path formed by two warning lines.

WAC 296-155-24515 (Cont.)

(ii) When the path to a point of access is not in use, a rope, wire, or chain, equal in strength and height to the warning line, shall be placed across the path at the point where the path intersects the warning line erected around the work area.

(4) Roof edge materials handling areas and materials storage. Employees working in a roof edge materials handling or materials storage area located on a low pitched roof with a ground to eave height greater than 10 feet shall be protected from falling along all unprotected roof sides and edges of the area.

(a) When guardrails are used at hoisting areas, a minimum of four feet of guardrail shall be erected on each side of the access point through which materials are hoisted.

(b) A chain or gate shall be placed across the opening between the guardrail sections when hoisting operations are not taking place.

(c) When guardrails are used at bitumen pipe outlet, a minimum of four feet of guardrail shall be erected on each side of the pipe.

(d) When safety belt/harness systems are used, they shall not be attached to the hoist.

(e) When fall restraint systems are used, they shall be rigged to allow the movement of employees only as far as the roof edge.

(f) Materials shall not be stored within six feet of the roof edge unless guardrails are erected at the roof edge.

[Statutory Authority: RCW 49.17.010, .040, .050. 00-14-058 (Order 99-43), § 296-155-24515, filed 07/03/2000, effective 10/01/2000. Statutory Authority: 96-24-051, (Order 96-05), § 296-155-24515, filed 11/27/96, effective 02/01/97. 95-10-016, § 296-155-24515, filed 4/25/95, effective 10/1/95; 91-24-017 (Order 91-07), § 296-155-24515, filed 11/22/91, effective 12/24/91; 91-03-044 (Order 90-18), § 296-155-24515, filed 1/10/91, effective 2/12/91.]

WAC 296-155-24519 Reserved.

[Statutory Authority: 96-24-051, (Order 96-05), § 296-155-24519, filed 11/27/96, effective 02/01/97. 95-10-016, § 296-155-24519, filed 4/25/95, effective 10/1/95.]

WAC 296-155-24520 Leading edge control zone.

(1) When performing leading edge work, the employer shall ensure that a control zone be established according to the following requirements:

(a) The control zone shall begin a minimum of 6 feet back from the leading edge to prevent exposure by employees who are not protected by fall restraint or fall arrest systems.

(b) The control zone shall be separated from other areas of the low pitched roof or walking/working surface by the erection of a warning line system.

(c) The warning line system shall consist of wire, rope, or chain supported on stanchions, or a method which provides equivalent protection.

(d) The spacing of the stanchions and support of the line shall be such that the lowest point of the line (including sag) is not less than 36 inches from the walking/working surface, and its highest point is not more than 42 inches (106.7 cm) from the walking/working surface.

(e) Each line shall have a minimum tensile strength of 200 pounds (90 kilograms).

WAC 296-155-24520 (Cont.)

(f) Each line shall be flagged or clearly marked with high visibility materials at intervals not to exceed 6 feet.

(g) After being erected with the rope, or chain attached, stanchions shall be capable of resisting without tipping over, a force of at least 16 pounds (71 Newtons) applied horizontally against the stanchions 30 inches (0.76 meters) above the roof surface, perpendicular to the warning line and in the direction of the roof edge.

(2) When positive means of fall restraint as described in WAC 296-155-24510 (1)(a) through (d), or fall arrest as described in WAC 296-155-24510 (2) through (6) are not utilized, a safety monitor system as described in WAC 296-155-24521 shall be implemented to protect employees working between the forward edge of the warning line and the leading edge.

[Statutory Authority: RCW 49.17.010, .040, .050. 00-14-058 (Order 99-43), § 296-155-24520, filed 07/03/2000, effective 10/01/2000. Statutory Authority: 96-24-051, (Order 96-05), § 296-155-24520, filed 11/27/96, effective 02/01/97. 95-10-016, § 296-155-24520, filed 4/25/95, effective 10/1/95; 91-24-017 (Order 91-07), § 296-155-24520, filed 11/22/91, effective 12/24/91; 91-03-044 (Order 90-18), § 296-155-24520, filed 1/10/91, effective 2/12/91.]

WAC 296-155-24521 Safety monitor system.

(1) A safety monitor system (SMS) may be used in conjunction with a warning line system as a method of guarding against falls during work on low pitched roofs and leading edge work only.

(2) When selected, the employer shall ensure that the safety monitor system shall be addressed in the fall protection work plan, include the name of the safety monitor(s) and the extent of their training in both the safety monitor and warning line systems, and shall ensure that the following requirements are met.

(3) The safety monitor system shall not be used when adverse weather conditions create additional hazards.

(4) A person acting in the capacity of safety monitor(s) shall be trained in the function of both the safety monitor and warning lines systems, and shall:

(a) Be a competent person as defined in WAC 296-155-24503.

(b) Have control authority over the work as it relates to fall protection.

(c) Be instantly distinguishable over members of the work crew.

(d) Engage in no other duties while acting as safety monitor.

(e) Be positioned in relation to the workers under their protection, so as to have a clear, unobstructed view and be able to maintain normal voice communication.

(f) Not supervise more than eight exposed workers at one time.

(g) Warn the employee when it appears that the employee is unaware of a fall hazard or is acting in an unsafe manner.

(5) Control zone:

(a) Workers shall be distinguished from other members of the crew by wearing highly visible, distinctive, and uniform apparel readily distinguishing them from other members of the crew only while in the control zone.

WAC 296-155-24521 (Cont.)

(b) The employer shall ensure that each employee working in a control zone promptly comply with fall hazard warnings from safety monitors.

[Statutory Authority: RCW 49.17.010, .040, .050. 00-14-058 (Order 99-43), § 296-155-24521, filed 07/03/2000, effective 10/01/2000. Statutory Authority: 96-24-051, (Order 96-05), § 296-155-24521, filed 11/27/96, effective 02/01/97. 95-10-016, § 296-155-24521, filed 4/25/95, effective 10/1/95; 91-03-044 (Order 90-18), § 296-155-24521, filed 1/10/91, effective 2/12/91.]

WAC 296-155-24522 Reserved.

[Statutory Authority: 96-24-051, (Order 96-05), § 296-155-24522, filed 11/27/96, effective 02/01/97. 95-10-016, § 296-155-24522, filed 4/25/95, effective 10/1/95.]

WAC 296-155-24523 Appendix A to Part C-1--Determining roof widths nonmandatory guidelines for complying with WAC 296-155-24515 (2)(b).

(1) This appendix serves as a guideline to assist employers complying with the requirements of WAC 296-155-24515 (2)(b). WAC 296-155-24515 (2)(b) allows the use of a safety monitoring system alone as a means of providing fall protection during the performance of roofing operations on low-sloped roofs 50 feet (15.25 m) or less in width. Each example in the appendix shows a roof plan or plans and indicates where each roof or roof area is to be measured to determine its width. Section views or elevation views are shown where appropriate. Some examples show “correct” and “incorrect” subdivisions of irregularly shaped roofs divided into smaller, regularly shaped areas. In all examples, the dimension selected to be the width of an area is the lesser of the two primary dimensions of the area, as viewed from above. Example A shows that on a simple rectangular roof, width is the lesser of the two primary overall dimensions. This is also the case with roofs which are sloped toward or away from the roof center, as shown in Example B.

(2) Many roofs are not simple rectangles. Such roofs may be broken down into subareas as shown in Example C. The process of dividing a roof area can produce many different configurations. Example C gives the general rule of using dividing lines of minimum length to minimize the size and number of the areas which are potentially less than 50 feet (15.25 m) wide. The intent is to minimize the number of roof areas where safety monitoring systems alone are sufficient protection.

(3) Roofs which are comprised of several separate, non-contiguous roof areas, as in Example D, may be considered as a series of individual roofs. Some roofs have penthouses, additional floors, courtyard openings, or similar architectural features; Example E shows how the rule for dividing roofs into subareas is applied to such configurations. Irregular, non-rectangular roofs must be considered on an individual basis, as shown in Example F.

Example A

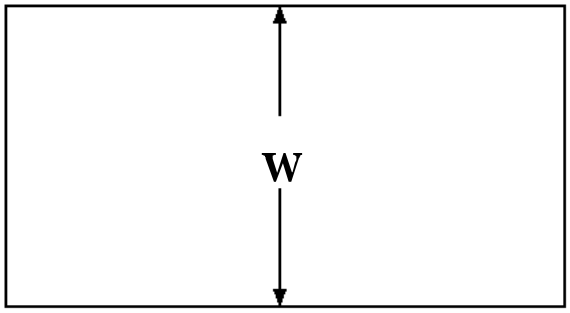

PLAN VIEW

WAC 296-155-24523 (Cont.)

Example B

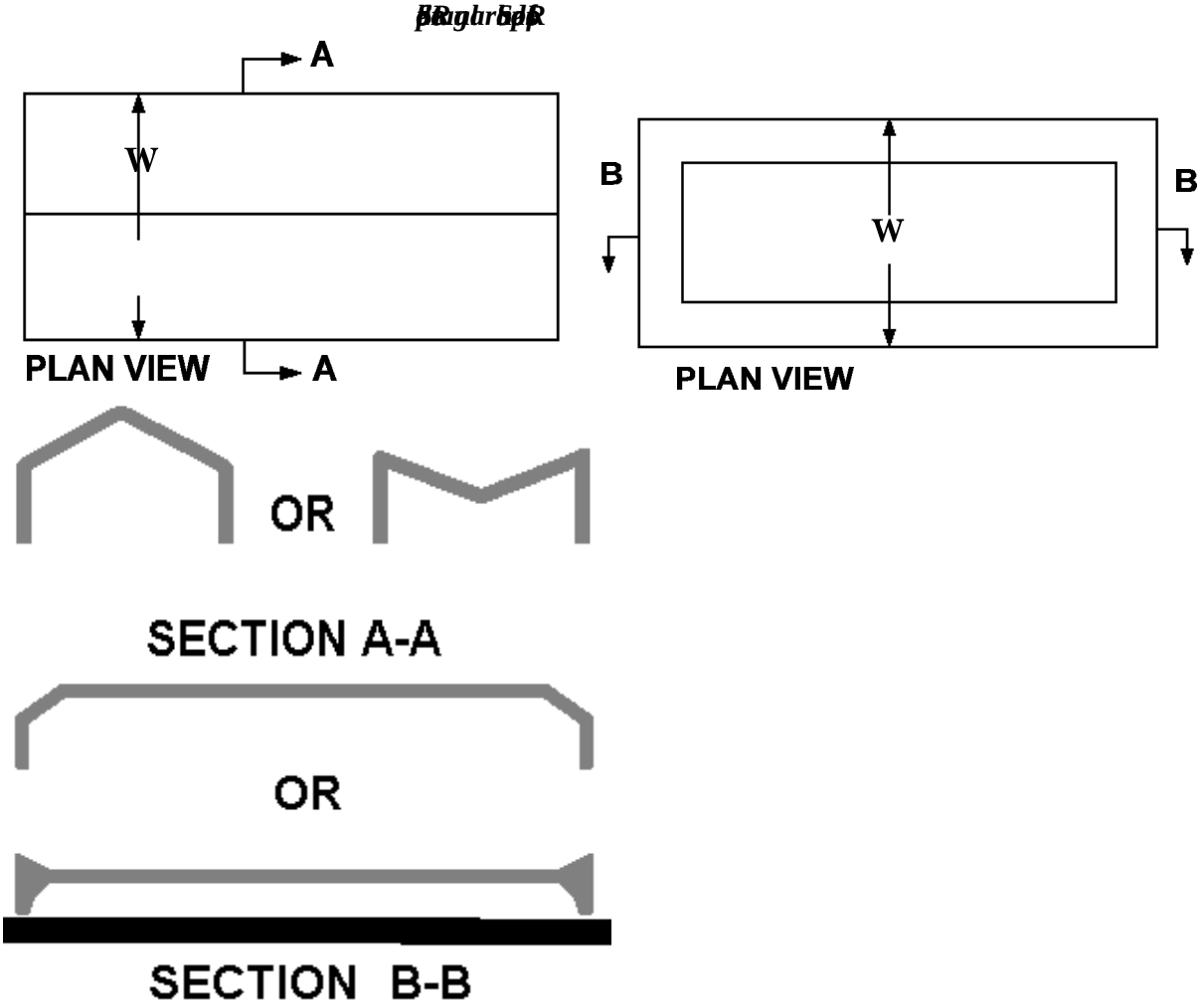

WAC 296-155-24523 (Cont.)

Example C

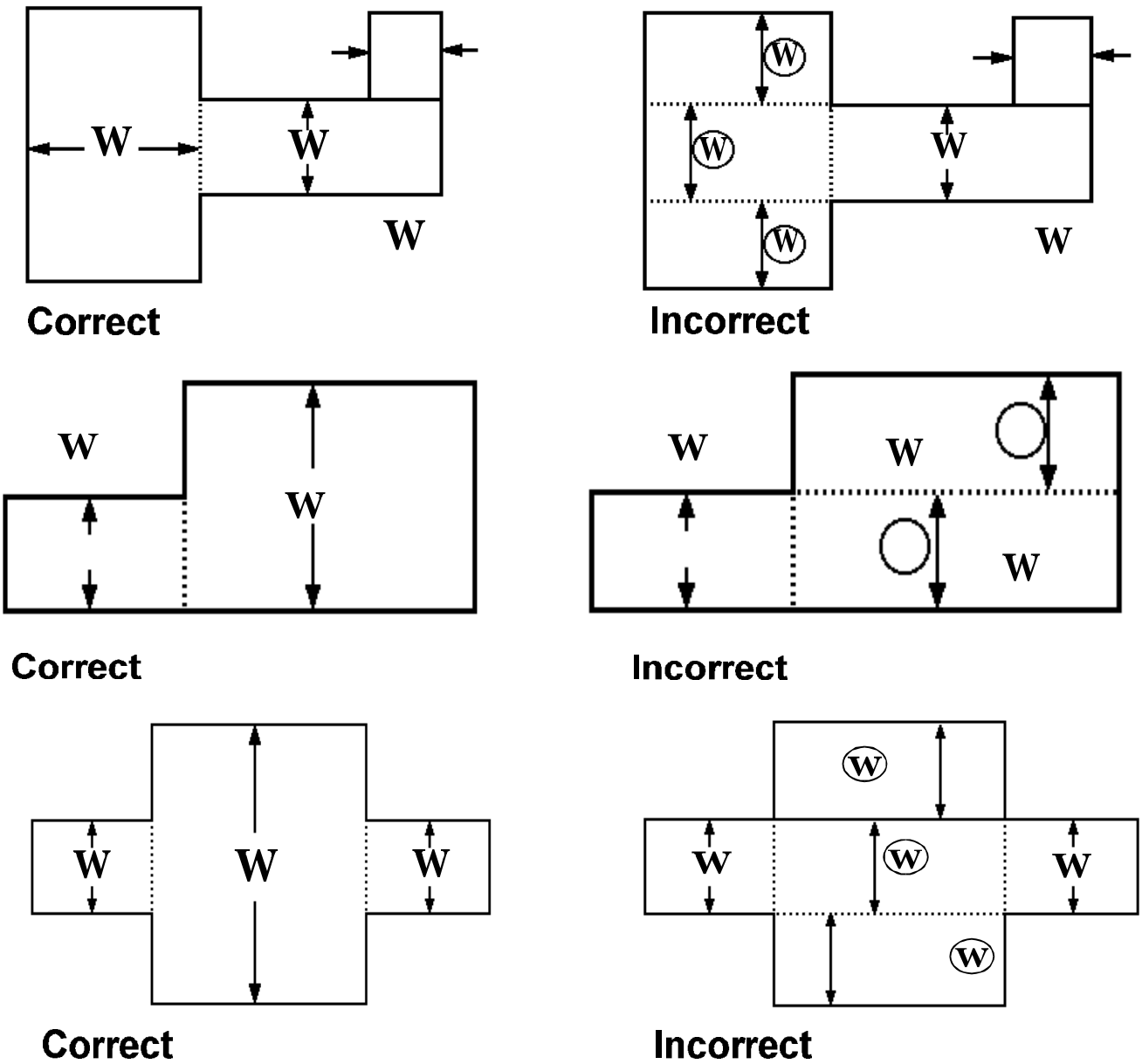

Such roofs are to be divided into subareas by using dividing lines of minimum length to minimize the size and number of the areas which are potentially less than or equal to 50 feet (15.25 meters) in width, in order to limit the size of roof areas where the safety monitoring system alone can be used (WAC 296-155-24515(2)(b)).
Dotted lines are used in the examples to show the location of dividing lines.

Ⓦ denotes incorrect measurements of width.

WAC 296-155-24523 (Cont.)

Example D

1.

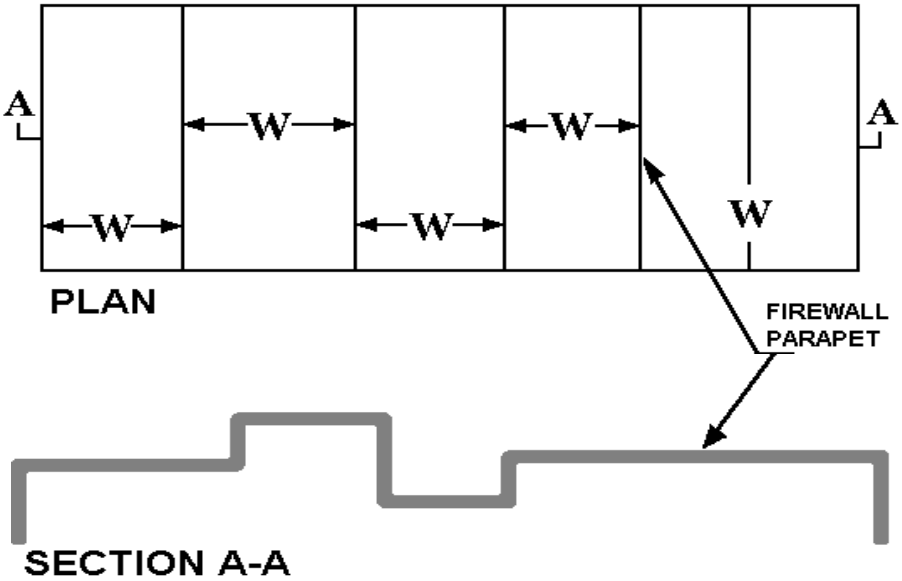

2.

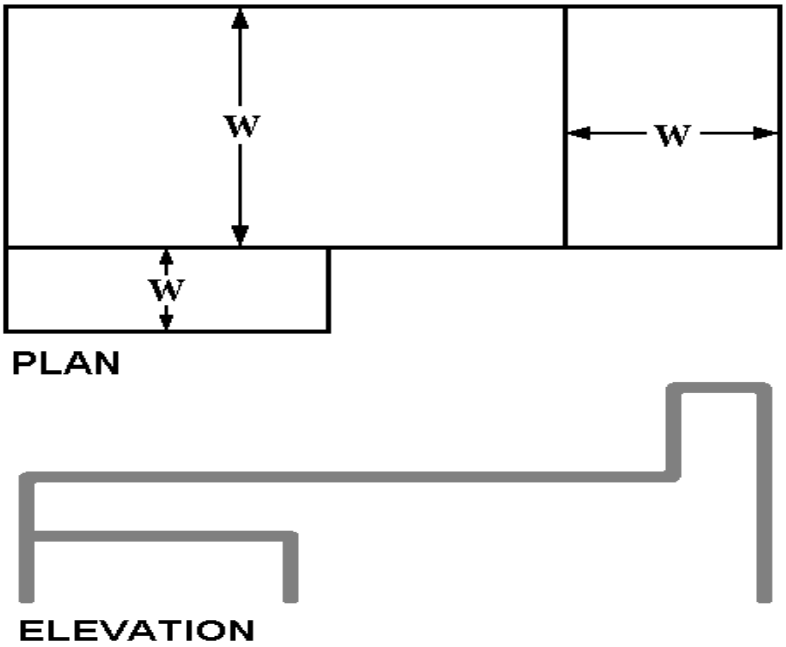

WAC 296-155-24523 (Cont.)

Example E

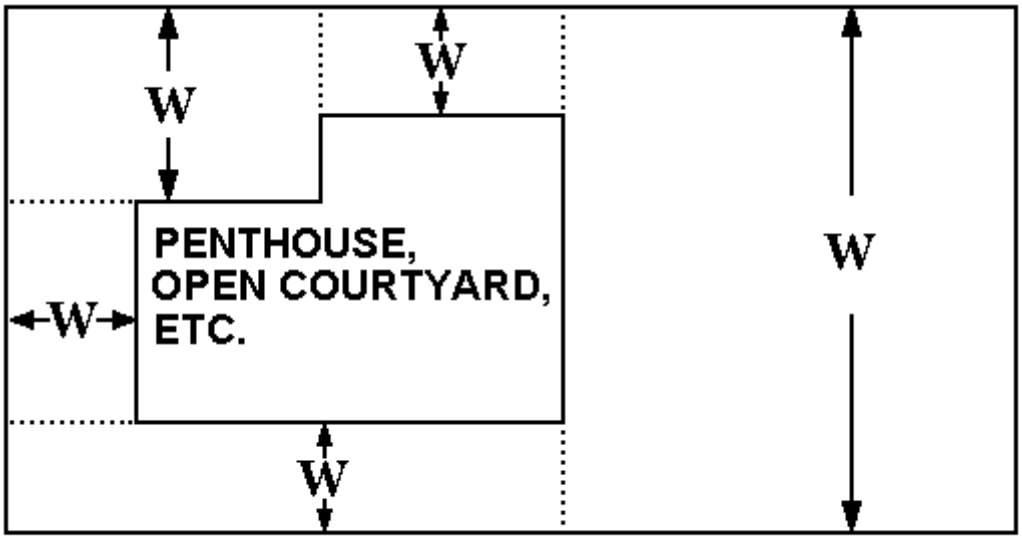

CORRECT

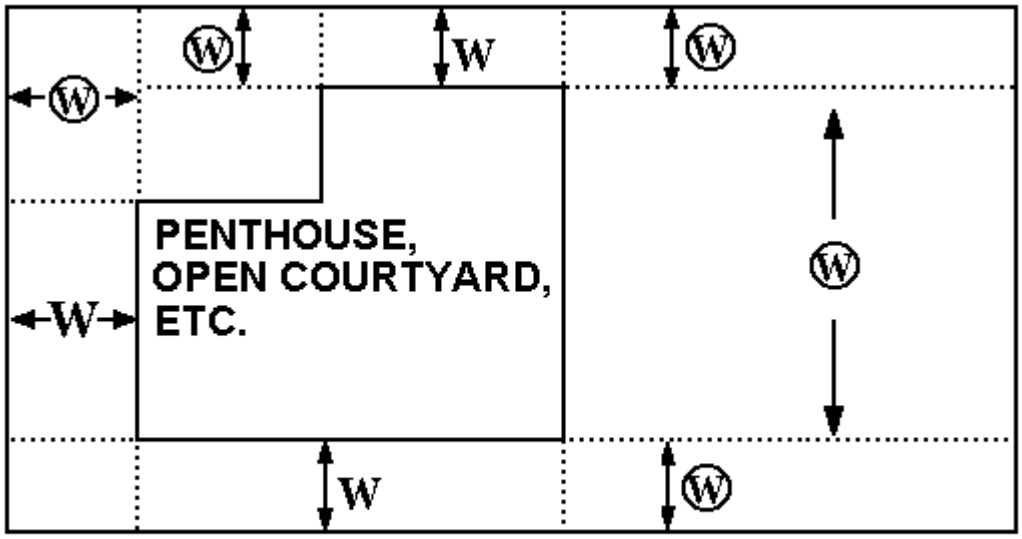

INCORRECT

Such roofs are to be divided into subareas by using dividing lines of minimum length to minimize the size and number of the areas which are potentially less than or equal to 50 feet (15.25 meters) in width, in order to limit the size of roof areas where the safety monitoring system alone can be used (WAC 296-155-24505 (2)(j)). Dotted lines are used in the examples to show the location of dividing lines.

Ⓦ denotes incorrect measurements of width.

WAC 296-155-24523 (Cont.)

Example F

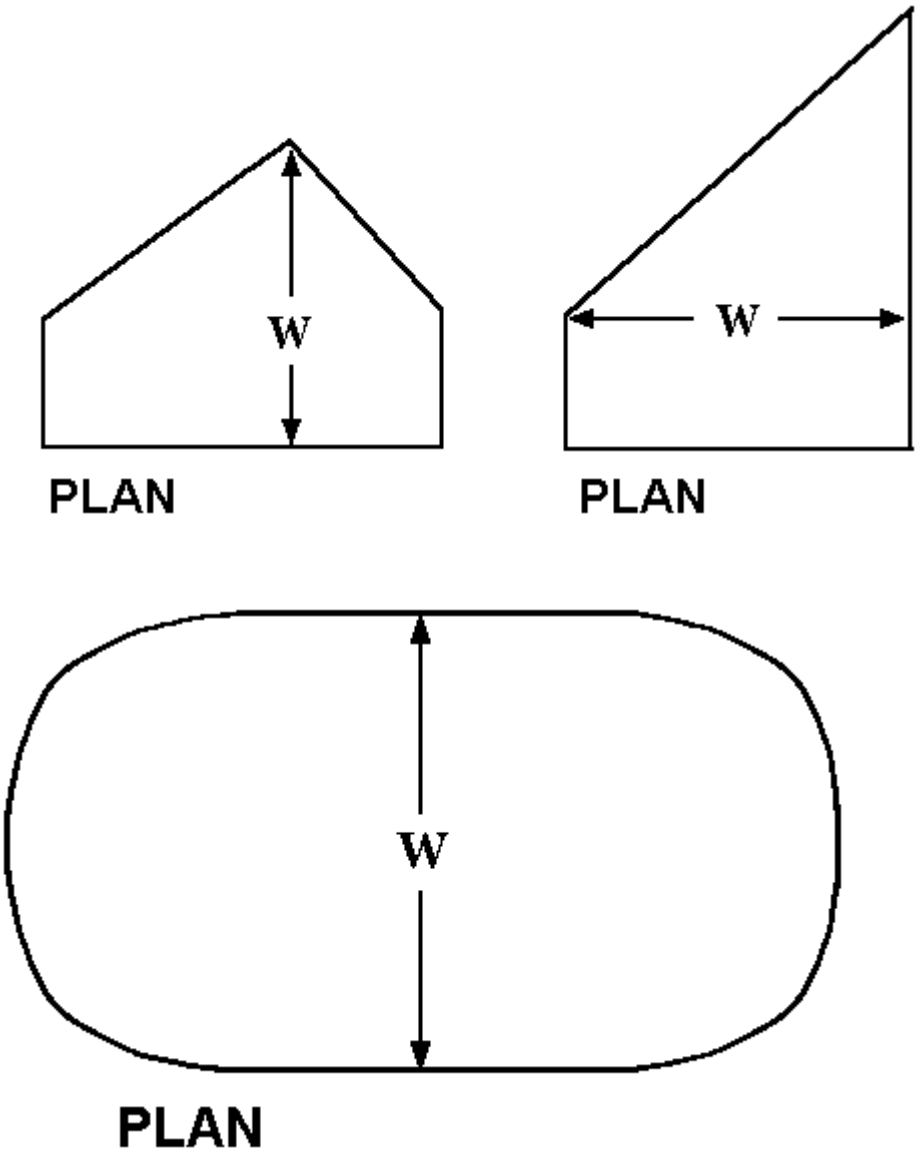

[Statutory Authority: Chapter 49.17 RCW. 96-24-051, (Order 96-05), § 296-155-24523, filed 11/27/96, effective 02/01/97. 95-10-016, § 296-155-24523, filed 4/25/95, effective 10/1/95.]

WAC 296-155-24524 Reserved.

[Statutory Authority: Chapter 49.17 RCW. 96-24-051, (Order 96-05); § 296-155-24524, filed 11/27/96, effective 02/01/97. 95-10-016, § 296-155-24524, filed 4/25/95, effective 10/1/95.

WAC 296-155-24525 Appendix B to Part C-1--Fall restraint and fall arrest (employer information only). Additional standards that require the use of fall restraint and/or fall arrest protection for employees are listed below:

WAC 296-155-24525 (Cont.)

Ladders	WAC 296-155-480 (1)(r) WAC 296-155-480 (1)(s)
Scaffolds	WAC 296-155-483(7)
Boom Supported Elevating Work Platforms	WAC 296-155-489
Vehicle Mounted Elevated and Rotating Work Platfroms	WAC 296-155-490 (2)(b)(v)
Crane and Derrick Supported Work Platforms	WAC 296-155-528 (6)(c) WAC 296-155-528 (6)(d) WAC 296-155-528 (7)(i) WAC 296-155-528 (7)(j) WAC 296-155-528 (7)(k) WAC 296-155-528 (10)(h)
Open Sided Floors	WAC 296-155-505 (6)(a) through (f)
Pile Driving	WAC 296-155-620 (1)(i)
Vertical Slip Forms	WAC 296-155-688(9)
Placing and Removal of Forms	WAC 296-155-689(4)
Steel Erection Temporary Floors	WAC 296-155-705 (2)(b)
Tunneling (Skips and Platforms	WAC 296-155-730 (8)(e)

[Statutory Authority: RCW 49.17.010, .040, .050. 00-14-058 (Order 99-43), § 296-155-24525, filed 07/03/2000, effective 10/01/2000. Statutory Authority: Chapter 49.17.010, .040, .050, .060 RCW. 98-05-046 (Order 97-10), § 296-155-24525, filed 2/13/98, effective 4/15/98. RCW 49.17.040, 050 and 060. 96-24-051, § 296-155-24525, filed 11/27/96, effective 2/1/97. 95-10-016, § 296-155-24525, filed 4/25/95, effective 10/1/95. 91-03-044 (Order 90-18), § 296-155-24525, filed 1/10/91, effective 2/12/91.]

PART D
FIRE PROTECTION AND PREVENTION

WAC 296-155-250 Definitions applicable to this part.

(1) **"Approved"** for the purpose of this part, means equipment that has been listed or approved by a nationally recognized testing laboratory such as Factory Mutual Engineering Corp., or Underwriters' Laboratories, Inc., federal agencies such as United States Mine Safety and Health Administration or United States Coast Guard, which issue approvals for such equipment, or the department of labor and industries.

(2) **"Closed container"** means a container so sealed by means of a lid or other device that neither liquid nor vapor will escape from it at ordinary temperatures.

(3) **"Combustible liquid"** means any liquid having a flashpoint at or above 100°F (37.8°C). Combustible liquids shall be divided into two classes as follows:

(a) **"Class II liquids"** shall include those with flashpoints at or above 100°F (37.8°C) and below 140 °F (60°C), except any mixture having components with flashpoints of 200°F (93.3°C) or higher, the volume of which make up 99 percent or more of the total volume of the mixture.

(b) **"Class III liquids"** shall include those with flashpoints at or above 140°F (60°C). Class III liquids are subdivided into two subclasses:

(i) **"Class IIIA liquids"** shall include those with flashpoints at or above 140°F (60°C) and below 200°F (93.3°C), except any mixture having components with flashpoints of 200°F (93.3°C), or higher, the total volume of which make up 99 percent or more of the total volume of the mixture.

(ii) **"Class IIIB liquids"** shall include those with flashpoints at or above 200°F (93.3°C). This section does not cover Class IIIB liquids. Where the term "Class III liquids" is used in this section, it shall mean only Class IIIA liquids.

(c) When a combustible liquid is heated for use to within 30°F (16.7°C) of its flashpoint, it shall be handled in accordance with the requirements for the next lower class of liquids.

(4) **"Combustion"** means any chemical process that involves oxidation sufficient to produce light or heat.

(5) **"Fire brigade"** means an organized group of employees that are knowledgeable, trained, and skilled in the safe evacuation of employees during emergency situations and in assisting in fire fighting operations.

(6) **"Fire resistance"** means so resistant to fire that, for specified time and under conditions of a standard heat intensity, it will not fail structurally and will not permit the side away from the fire to become hotter than a specified temperature. For purposes of this part, fire resistance shall be determined by the Standard Methods of Fire Tests of Building Construction and Materials, NFPA 251-72.

(7) **"Flammable"** means capable of being easily ignited, burning intensely or having a rapid rate of flame spread.

WAC 296-155-250 (Cont.)

(8) **"Flammable liquid"** means any liquid having a flashpoint below 100°F (37.8°C), except any mixture having components with flashpoints of 100°F (37.8°C) or higher, the total of which make up 99 percent or more of the total volume of the mixture. Flammable liquids shall be known as Class I liquids. Class I liquids are divided into three classes as follows:

(a) Class IA shall include liquids having flashpoints below 73°F (22.8°C) and having a boiling point below 100°F (37.8°C).

(b) Class IB shall include liquids having flashpoints below 73°F (22.8°C) and having a boiling point at or above 100°F (37.8°C).

(c) Class IC shall include liquids having flashpoints at or above 73°F (22.8°C) and below 100°F (37.8°C).

(9) **"Flashpoint"** means the minimum temperature at which a liquid gives off vapor within a test vessel in sufficient concentration to form an ignitable mixture with air near the surface of the liquid, and shall be determined as follows:

(a) For a liquid which has a viscosity of less than 45 SUS at 100°F (37.8°C), does not contain suspended solids, and does not have a tendency to form a surface film while under test, the procedure specified in the Standard Method of Test for Flashpoint by Tag Closed Tester (ASTM D-56-70) shall be used.

(b) For a liquid which has a viscosity of 45 SUS or more at 100°F (37.8°C), or contains suspended solids, or has a tendency to form a surface film while under test, the Standard Method of Test for Flashpoint by Pensky-Martens Closed Tester (ASTM D-93-71) shall be used, except that the methods specified in Note 1 to section 1.1 of ASTM D-93-71 may be used for the respective materials specified in the note.

(10) **"Liquified petroleum gases" "LPG" and "LP Gas"** mean and include any material which is composed predominantly of any of the following hydrocarbons, or mixtures of them, such as propane, propylene, butane (normal butane or isobutane), and butylenes.

(11) **"Portable tank"** means a closed container having a liquid capacity more than 60 U.S. gallons, and not intended for fixed installation.

(12) **"Safety can"** means an approved closed container, of not more than 5 gallons capacity, having a spring-closing lid and spout cover and so designed that it will safely relieve internal pressure when subjected to fire exposure.

(13) **"Salamander"** means a portable heating device, solid or liquid fueled, which is not vented to the outdoor atmosphere.

(14) **"Vapor pressure"** means the pressure, measured in pounds per square inch (absolute), exerted by a volatile liquid as determined by the "Standard Method of Test for Vapor Pressure of Petroleum Products (Reid Method)," (ASTM D-323-68).

[Statutory Authority: RCW 49.17.040 and 49.17.050. 86-03-074 (Order 86-14), § 296-155-250, filed 1/21/86; Order 74-26, § 296-155-250, filed 5/7/74, effective 6/6/74.]

WAC 296-155-260 Fire protection.

(1) General requirements.

(a) The employer shall be responsible for development of a fire protection program to be followed throughout all phases of construction and demolition work, and the employer shall provide for fire fighting equipment as specified in this part. As fire hazards occur, there shall be no delay in providing necessary equipment.

(b) Access to all available fire fighting equipment shall be maintained at all times.

(c) All fire fighting equipment, provided by the employer, shall be conspicuously located.

(d) All fire fighting equipment shall be periodically inspected by a competent person, and maintained in operating condition. Defective equipment shall be immediately replaced.

(e) As warranted by the project, the employer shall provide a trained and equipped fire fighting organization (fire brigade) to assure adequate protection to life.

(2) Water supply.

(a) A temporary or permanent water supply, of sufficient volume, duration, and pressure, required to properly operate fire fighting equipment shall be made available as soon as combustible materials accumulate.

(b) Where underground water mains are to be provided, they shall be installed, completed, and made available for use as soon as practicable.

(3) Portable fire fighting equipment.

(a) A fire extinguisher, rated not less than 2A, shall be provided for each 3,000 square feet of a combustible building area, or major fraction thereof. Travel distance from any point of the protected area to the nearest fire extinguisher shall not exceed a horizontal distance of 100 feet.

Note: One 55-gallon open drum of water with two fire pails may be substituted for a fire extinguisher having a 2A rating.

(b) A 1/2-inch diameter garden-type hose line, not to exceed 100 feet in length and equipped with a nozzle, may be substituted for a 2A-rated fire extinguisher, provided it is capable of discharging a minimum of 5 gallons per minute with a minimum hose stream range of 30 feet horizontally. The garden-type hose lines shall be mounted on conventional racks or reels. The number and location of hose racks or reels shall be such that at least one hose stream can be applied to all points in the area.

(c) One or more fire extinguishers, rated not less than 2A, shall be provided on each floor. In multistory buildings, where combustibles are present, at least one fire extinguisher shall be located adjacent to a stairway.

(d) Extinguishers and water drums, subject to freezing, shall be protected from freezing.

(e) A fire extinguisher, rated not less than 10B, shall be provided within 50 feet of wherever more than 5 gallons of flammable or combustible liquids or 5 pounds of flammable gas are being used on the jobsite. This requirement does not apply to the integral fuel tanks of motor vehicles.

WAC 296-155-260 (Cont.)

(f) Carbon tetrachloride and other toxic vaporizing liquid fire extinguishers are prohibited.

(g) Portable fire extinguishers shall be inspected periodically and maintained in accordance with Maintenance and Use of Portable Fire Extinguishers, NFPA No. 10A-1981 and WAC 296-800-300.

(h) Fire extinguishers which have been listed or approved by a nationally recognized testing laboratory, shall be used to meet the requirements of this part. (See Table D-1)

Note: For additional requirements relating to portable fire extinguishers see WAC 296-800-300.

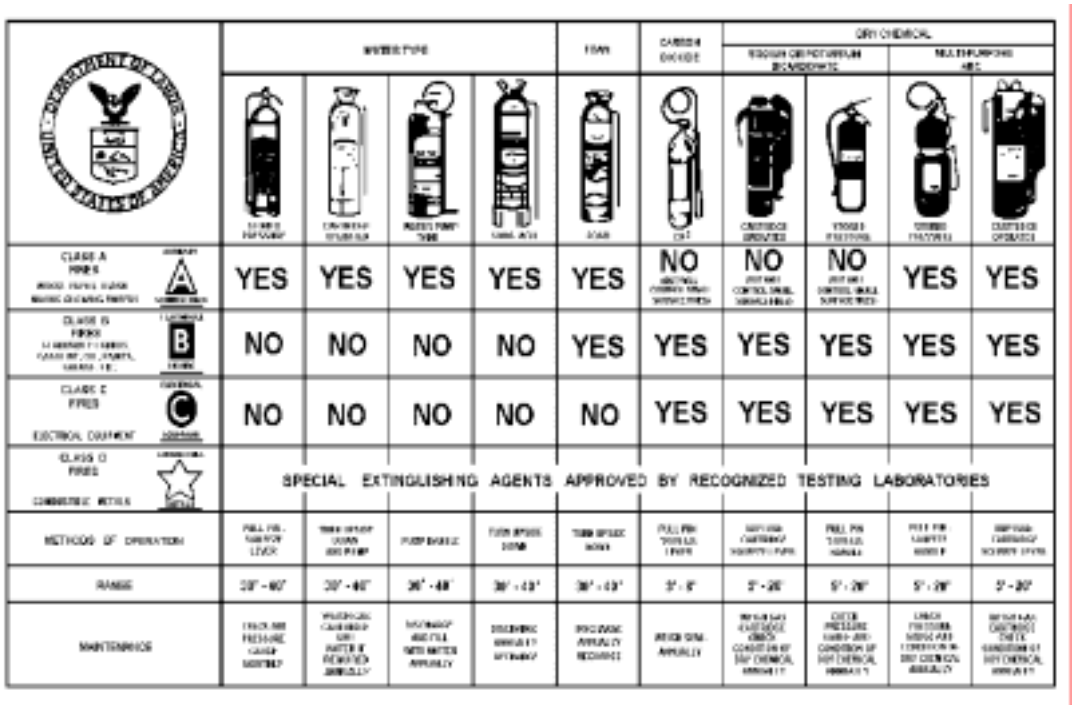

	WATER TYPE				FOAM	CARBON DIOXIDE	DRY CHEMICAL			
							SODIUM OR POTASSIUM BICARBONATE		MULTIPURPOSE ABC	
CLASS A FIRES	YES	YES	YES	YES	YES	NO	NO	NO	YES	YES
CLASS B FIRES	NO	NO	NO	NO	YES	YES	YES	YES	YES	YES
CLASS C FIRES ELECTRICAL EQUIPMENT	NO	NO	NO	NO	NO	YES	YES	YES	YES	YES
CLASS D FIRES COMBUSTIBLE METALS	SPECIAL EXTINGUISHING AGENTS APPROVED BY RECOGNIZED TESTING LABORATORIES									
METHODS OF OPERATION										
RANGE										
MAINTENANCE										

Note: One hundred feet, or less, of 1-1/2 inch hose, with a nozzle capable of discharging water at 25 gallons or more per minute, may be substituted for a fire extinguisher rated not more than 2A in the designated area provided that the hose line can reach all points in the area.

(i) If fire hose connections are not compatible with local fire fighting equipment, the contractor shall provide adapters, or equivalent, to permit connections.

(j) During demolition involving combustible materials, charged hose lines, supplied by hydrants, water tank trucks with pumps, or equivalent, shall be made available.

(4) Fixed fire fighting equipment.

(a) Sprinkler protection.

(i) If the facility being constructed includes the installation of automatic sprinkler protection, the installation shall closely follow the construction and be placed in service as soon as applicable laws permit following completion of each story.

WAC 296-155-260 (Cont.)

(ii) During demolition or alterations, existing automatic sprinkler installations shall be retained in service as long as reasonable. The operation of sprinkler control valves shall be permitted only by properly authorized persons.

Note: Modification of sprinkler systems to permit alterations or additional demolition should be expedited so that the automatic protection may be returned to service as quickly as possible. Sprinkler control valves shall be checked daily at close of work to ascertain that the protection is in service.

(b) Standpipes. In all structures in which standpipes are required, or where standpipes exist in structures being altered, they shall be brought up as soon as applicable laws permit, and shall be maintained as construction progresses in such a manner that they are always ready for fire protection use. The standpipes shall be provided with Siamese fire department connections on the outside of the structure, at the street level, which shall be conspicuously marked. There shall be at least one standard hose outlet at each floor.

(5) Fire alarm devices.

(a) An alarm system, e.g., telephone system, siren, etc., shall be established by the employer whereby employees on the site and the local fire department can be alerted for an emergency.

(b) The alarm code and reporting instructions shall be conspicuously posted at phones and at employee entrances.

(6) Fire cutoffs.

(a) Fire walls and exit stairways, required for the completed buildings, shall be given construction priority. Fire doors, with automatic closing devices, shall be hung on openings as soon as practical.

(b) Fire cutoffs shall be retained in buildings undergoing alterations or demolition until operations necessitate their removal.

[Statutory Authority: RCW 49.17.010, .040, .050. 01-11-038 (Order 99-36), § 296-155-260, filed 05/09/01, effective 09/01/01. Statutory Authority: Chapter 49.17 RCW. 94-15-096 (Order 94-07), § 296-155-260, filed 7/20/94, effective 9/20/94. Statutory Authority: RCW 49.17.040 and 49.17.050. 86-03-074 (Order 86-14), § 296-155-260, filed 1/21/86; Order 76-6, § 296-155-260, filed 3/1/76; Order 74-26, § 296-155-260, filed 5/7/74, effective 6/6/74.]

WAC 296-155-265 Fire prevention.

(1) Ignition hazards.

(a) Electrical wiring and equipment for light, heat, or power purposes shall be installed in compliance with the requirements of Part I of this standard.

(b) Internal combustion engine powered equipment shall be so located that exhausts are well away from combustible materials. When exhausts are piped to outside the building under construction, a clearance of at least 6 inches shall be maintained between such piping and combustible material.

(c) Smoking shall be prohibited at or in the vicinity of operations which constitute a fire hazard, and shall be conspicuously posted: “No smoking or open flame.”

(d) Portable battery powered lighting equipment, used in connection with the storage, handling, or use of flammable gases or liquids, shall be of the type approved for the hazardous locations.

WAC 296-155-265 (Cont.)

(e) The nozzle of air, inert gas, and steam lines or hoses, when used in the cleaning or ventilation of tanks and vessels that contain hazardous concentrations of flammable gases or vapors, shall be bonded to the tank or vessel shell. Bonding devices shall not be attached or detached in hazardous concentrations of flammable gases or vapors.

(f) Workers shall not take open lights or open flames near or in an open sewer manhole, gas main, conduit or other similar place until the absence of explosive or harmful gases has been assured.

Open lights or flames shall not be carried into areas and enclosures where flammable vapors or exposed low flash point solvents exist. Only approved and suitable protected lights shall be used.

(2) Temporary buildings.

(a) No temporary building shall be erected where it will adversely affect any means of exit.

(b) Temporary buildings, when located within another building or structure, shall be of either noncombustible construction or of combustible construction having a fire resistance of not less than 1 hour.

(c) Temporary buildings, located other than inside another building and not used for the storage, handling, or use of flammable or combustible liquids, flammable gases, explosives, or blasting agents, or similar hazardous occupancies, shall be located at a distance of not less than 10 feet from another building or structure. Groups of temporary buildings, not exceeding 2,000 square feet in aggregate, shall, for the purpose of this part, be considered a single temporary building.

(3) Open yard storage.

(a) Combustible materials shall be piled with due regard to the stability of piles and in no case higher than 20 feet.

(b) Driveways between and around combustible storage piles shall be at least 15 feet wide and maintained free from accumulation of rubbish, equipment, or other articles or materials. Driveways shall be so spaced that a maximum grid system unit of 50 feet by 150 feet is produced.

(c) The entire storage site shall be kept free from accumulation of unnecessary combustible materials. Weeds and grass shall be kept down and a regular procedure provided for the periodic cleanup of the entire area.

(d) When there is a danger of an underground fire, that land shall not be used for combustible or flammable storage.

(e) Method of piling shall be solid wherever possible and in orderly and regular piles. No combustible material shall be stored outdoors within 10 feet of a building or structure.

(f) Portable fire extinguishing equipment, suitable for the fire hazard involved, shall be provided at convenient, conspicuously accessible locations in the yard area. Portable fire extinguishers, rated not less than 2A, shall be placed so that maximum travel distance to the nearest unit shall not exceed 100 feet.

WAC 296-155-265 (Cont.)

(4) Indoor storage.

(a) Storage shall not obstruct, or adversely affect, means of exit.

(b) All materials shall be stored, handled, and piled with due regard to their fire characteristics.

(c) Noncompatible materials, which may create a fire hazard, shall be segregated by a barrier having a fire resistance of at least 1 hour.

(d) Material shall be piled to minimize the spread of fire internally and to permit convenient access for firefighting. Stable piling shall be maintained at all times. Aisle space shall be maintained to safely accommodate the widest vehicle that may be used within the building for fire- fighting purposes.

(e) Clearance of at least 36 inches shall be maintained between the top level of the stored material and the sprinkler deflectors.

(f) Clearance shall be maintained around lights and heating units to prevent ignition of combustible materials.

(g) A clearance of 24 inches shall be maintained around the path of travel of fire doors unless a barricade is provided, in which case no clearance is needed. Material shall not be stored within 36 inches of a fire door opening.

[Statutory Authority: Chapter 49.17 RCW. 88-23-054 (Order 88-25), § 296-155-265, filed 11/14/88; Order 74-26, § 296-155-265, filed 5/7/74, effective 6/6/74.]

WAC 296-155-270 Flammable and combustible liquids.

(1) General requirements.

(a) Only approved containers and portable tanks shall be used for storage and handling of flammable and combustible liquids. Approved metal safety cans, or department of transportation approved containers shall be used for the handling and use of flammable liquids in quantities five gallons or less, except that this shall not apply to those flammable liquid materials which are highly viscid (extremely hard to pour), which may be used and handled in original shipping containers. For quantities of one gallon or less, only the original container may be used for storage, use, and handling of flammable liquids.

(b) Flammable or combustible liquids shall not be stored in areas used for exits, stairways, or normally used for the safe passage of people.

(c) Flammable and combustible liquid containers shall be legibly marked to indicate their contents. Each storage container for flammable or combustible liquids, with a capacity of 50 gallons or more, shall have the contents of the container identified by a sign of clearly visible contrasting colors with letters at least 3 inches high, painted on the container at the discharge valve and at the fill point.

(d) Gasoline shall not be used as a solvent or a cleaning agent.

(2) Indoor storage of flammable and combustible liquids.

WAC 296-155-270 (Cont.)

(a) No more than 25 gallons of flammable or combustible liquids shall be stored in a room outside of an approved storage cabinet. For storage of liquid petroleum gas, see WAC 296-155-275.

(b) Quantities of flammable and combustible liquid in excess of 25 gallons shall be stored in an acceptable or approved cabinet meeting the following requirements:

(i) Acceptable wooden storage cabinets shall be constructed in the following manner, or equivalent: The bottom, sides, and top shall be constructed of an exterior grade of plywood at least 1 inch in thickness, which shall not break down or delaminate under standard fire test conditions. All joints shall be rabbeted and shall be fastened in two directions with flathead wood screws, when more than one door is used, there shall be a rabbeted overlap of not less than 1 inch. Steel hinges shall be mounted in such a manner as to not lose their holding capacity due to loosening or burning out of the screws when subjected to fire. Such cabinets shall be painted inside and out with fire retardant paint.

(ii) Approved metal storage cabinets will be acceptable.

(iii) Cabinets shall be labeled in conspicuous lettering, “Flammable-Keep fire away.”

(c) Not more than 60 gallons of flammable or 120 gallons of combustible liquids shall be stored in any one storage cabinet. Not more than three such cabinets may be located in a single storage area. Quantities in excess of this shall be stored in an inside storage room.

(d) (i) Inside storage room shall be constructed to meet the required fire-resistive rating for their use. Such construction shall comply with the test specifications set forth in Standard Methods of Fire Test of Building Construction and Material, NFPA 251-1972.

(ii) Where an automatic extinguishing system is provided, the system shall be designed and installed in an approved manner. Openings to other rooms or buildings shall be provided with noncombustible liquid-tight raised sills or ramps at least 4 inches in height, or the floor in the storage area shall be at least 4 inches below the surrounding floor. Openings shall be provided with approved self-closing fire doors. The room shall be liquid-tight where the walls join the floor. A permissible alternate to the sill or ramp is an open-grated trench, inside of the room, which drains to a safe location. Where other portions of the building or other buildings are exposed, windows shall be protected as set forth in the Standard for Fire Doors and Windows, NFPA No. 80-1983, for Class E or F openings. Wood of at least 1-inch nominal thickness may be used for shelving, racks, dunnage, scuffboards, floor overlay and similar installations.

(iii) Materials which will react with water and create a fire hazard shall not be stored in the same room with flammable or combustible liquids.

(iv) Storage in inside storage rooms shall comply with Table D-2 following:

WAC 296-155-270 (Cont.)

TABLE D-2

Fire Protection Provided	Fire Assistance	Maximum Size	Total Allowable Quantities gals./sq. ft./floor Area
Yes	2 hrs.	500 sq. ft.	10
No	2 hrs.	500 sq. ft.	4
Yes	1 hr.	150 sq. ft.	5
No	1 hr.	150 sq. ft.	2

Note: Fire protection system shall be sprinkler, water spray, carbon dioxide or other system approved by a nationally recognized testing laboratory for this purpose.

(v) Electrical wiring and equipment located in inside storage rooms shall be approved for Class 1, Division 1, hazardous locations. For definition of Class 1, Division 1, hazardous locations, see WAC 296-155-456.

(vi) Every inside storage room shall be provided with either a gravity or a mechanical exhausting system. Such system shall commence not more than 12 inches above the floor and be designed to provide for a complete change of air within the room at least 6 times per hour. If a mechanical exhausting system is used, it shall be controlled by a switch located outside of the door. The ventilating equipment and any lighting fixtures shall be operated by the same switch. An electric pilot light shall be installed adjacent to the switch if flammable liquids are dispensed within the room. Where gravity ventilation is provided, the fresh air intake, as well as the exhausting outlet from the room, shall be on the exterior of the building in which the room is located.

(vii) In every inside storage room there shall be maintained one clear aisle at least 3 feet wide. Containers over 30 gallons capacity shall not be stacked one upon the other.

(viii) Flammable and combustible liquids in excess of that permitted in inside storage rooms shall be stored outside of buildings in accordance with subsection (3) of this section.

(3) Storage outside buildings.

(a) Storage of containers (not more than 60 gallons each) shall not exceed 1,100 gallons in any one pile or area. Piles or groups of containers shall be separated by a 5-foot clearance. Piles or groups of containers shall not be nearer than 20 feet to a building.

(b) Within 200 feet of each pile of containers, there shall be a 12-foot-wide access way to permit approach of fire control apparatus.

(c) The storage area shall be graded in a manner to divert possible spills away from buildings or other exposures, or shall be surrounded by a curb or earth dike at least 12 inches high. When curbs or dikes are used, provisions shall be made for draining off accumulations of ground or rain water, or spills of flammable or combustible liquids. Drains shall terminate at a safe location and shall be accessible to operation under fire conditions.

WAC 296-155-270 (Cont.)

(d) Outdoor portable tank storage.

(i) Portable tanks shall not be nearer than 20 feet from any building. Two or more portable tanks, grouped together, having a combined capacity in excess of 2,200 gallons, shall be separated by a 5-foot-clear area. Individual portable tanks exceeding 1,100 gallons shall be separated by a 5-foot-clear area.

(ii) Within 200 feet of each portable tank, there shall be a 12-foot-wide access way to permit approach of fire control apparatus.

(e) Storage areas shall be kept free of weeds, debris, and other combustible material not necessary to the storage.

(f) Portable tanks, not exceeding 660 gallons, shall be provided with emergency venting and other devices, as required by chapters III and IV of NFPA 30-1972, The Flammable and Combustible Liquids Code.

(g) Portable tanks, in excess of 660 gallons, shall have emergency venting and other devices, as required by chapters II and III of the Flammable and Combustible Liquids Code, NFPA 30-1972.

(4) Fire control for flammable or combustible liquid storage.

(a) At least one portable fire extinguisher, having a rating of not less than 20-B units, shall be located outside of, but not more than 10 feet from, the door opening into any room used for storage of more than 60 gallons of flammable or combustible liquids.

(b) At least one portable fire extinguisher having a rating of not less than 20-B units shall be located not less than 25 feet, nor more than 75 feet, from any flammable liquid storage area located outside.

(c) When sprinklers are provided, they shall be installed in accordance with the Standard for the Installation of Sprinkler Systems, NFPA 13-1972.

(d) At least one portable fire extinguisher having a rating of not less than 20-B:C units shall be provided on all tank trucks or other vehicles used for transporting and/or dispensing flammable or combustible liquids.

Note: For additional requirements relating to portable fire extinguishers see WAC 296-800-300.

(5) Dispensing liquids.

(a) Areas in which flammable or combustible liquids are transferred at the same time, in quantities greater than 5 gallons from one tank or container to another tank or container, shall be separated from other operations by 25-feet distance or by construction having a fire-resistance of at least 1 hour. Drainage or other means shall be provided to control spills. Adequate natural or mechanical ventilation shall be provided to maintain the concentration of flammable vapor at or below 10 percent of the lower flammable limit.

(b) Transfer flammable liquids from one container to another shall be done only when containers are electrically interconnected (bonded).

WAC 296-155-270 (Cont.)

(c) Flammable or combustible liquids shall be drawn from or transferred into vessels, containers, or tanks within a building or outside only through a closed piping system, from safety cans, by means of a device drawing through the top, or from a container, or portable tanks, by gravity or pump, through an approved self-closing valve. Transferring by means of air pressure on the container or portable tank is prohibited.

(d) The dispensing units shall be protected against collision damage.

(e) Dispensing devices and nozzles for flammable liquids shall be of an approved type, as required by WAC 296-24-33015.

(6) Handling liquids at point of final use.

(a) Flammable liquids shall be kept in closed containers when not actually in use.

(b) Leakage or spillage of flammable or combustible liquids shall be disposed of promptly and safely.

(c) Flammable liquids shall be used only where there are no open flames or other sources of ignition within 50 feet of the operation, unless conditions warrant greater clearance.

(7) Service and refueling areas.

(a) Flammable or combustible liquids shall be stored in approved closed containers, in tanks located underground, or in aboveground portable tanks.

(b) The tank trucks shall comply with the requirements covered in the Standard for Tank Vehicles for Flammable and Combustible Liquids, NFPA No. 385-1977.

(c) The dispensing hose shall be an approved type.

(d) The dispensing nozzle shall be an approved automatic-closing type.

(e) Underground tanks shall not be abandoned.

(f) Clearly identified and easily accessible switch(es) shall be provided at a location remote from dispensing devices to shut off the power to all dispensing devices in the event of an emergency.

(g) (i) Heating equipment of an approved type may be installed in the lubrication or service area where there is no dispensing or transferring of flammable liquids, provided the bottom of the heating unit is at least 18 inches above the floor and is protected from physical damage.

(ii) Heating equipment installed in lubrication or service areas, where flammable liquids are dispensed, shall be of an approved type for garages, and shall be installed at least 8 feet above the floor.

(h) There shall be no smoking or open flames in the areas used for fueling, servicing fuel systems for internal combustion engines, receiving or dispensing of flammable or combustible liquids.

(i) Conspicuous and legible signs prohibiting smoking shall be posted.

(j) The motor of any equipment being fueled shall be shut off during the fueling operation.

WAC 296-155-270 (Cont.)

(k) Each service or fueling area shall be provided with at least one fire extinguisher having a rating of not less than 20BC located so that an extinguisher will be within 75 feet of each pump, dispenser, underground fill pipe opening, and lubrication or service area.

Note: For additional requirements relating to portable fire extinguishers see WAC 296-800-300.

[Statutory Authority: RCW 49.17.010, .040, .050. 99-17-094 (Order 99-01), § 296-155-270, filed 08/17/99, effective 12/01/99. Statutory Authority: Chapter 49.17 RCW. 88-23-054 (Order 88-25), § 296-155-270, filed 11/14/88. Statutory Authority: RCW 49.17.040 and 49.17.050. 86-03-074 (Order 86-14), § 296-155-270, filed 1/21/86; Order 74-26, § 296-155-270, filed 5/7/74, effective 6/6/74.]

WAC 296-155-275 Liquefied petroleum gas (LP-gas).

(1) Approval of equipment and systems.

(a) Each system shall have containers, valves, connectors, manifold valve assemblies, and regulators of an approved type.

(b) All cylinders shall meet the department of transportation specification identification requirements published in 49 CFR Part 178, Shipping Container Specifications.

(2) Welding on LP-gas containers. Welding is prohibited on containers.

(3) Container valves and container accessories.

(a) Valves, fittings, and accessories connected directly to the container, including primary shut off valves, shall have a rated working pressure of at least 250 p.s.i.g. and shall be of material and design suitable for LP-gas service.

(b) Connections to containers, except safety relief connections, liquid level gauging devices, and plugged openings, shall have shutoff valves located as close to the container as practicable.

(4) Safety devices.

(a) Every container and every vaporizer shall be provided with one or more approved safety relief valves or devices. These valves shall be arranged to afford free vent to the outer air with discharge not less than 5 feet horizontally away from any opening into a building which is below such discharge.

(b) Shutoff valves shall not be installed between the safety relief device and the container, or the equipment or piping to which the safety relief device is connected, except that a shutoff valve may be used where the arrangement of this valve is such that full required capacity flow through the safety relief device is always afforded.

(c) Container safety relief devices and regulator relief vents shall be located not less than 5 feet in any direction from air openings into sealed combustion system appliances or mechanical ventilation air intakes.

(5) Dispensing.

(a) Filling of fuel containers for trucks or motor vehicles from bulk storage containers shall be performed not less than 10 feet from the nearest masonry-walled building, or not less than 25 feet from the nearest building or other construction and, in any event, not less than 25 feet from any building opening.

WAC 296-155-275 (Cont.)

(b) Filling of portable containers or containers mounted on skids from storage containers shall be performed not less than 50 feet from the nearest building.

(6) Requirements for appliances.

(a) LP-gas consuming appliances shall be approved types.

(b) Any appliance that was originally manufactured for operation with a gaseous fuel other than LP-gas, and is in good condition, may be used with LP-gas only after it is properly converted, adapted, and tested for performance with LP-gas before the appliance is placed in use.

(7) Containers and regulating equipment installed outside of buildings or structures. Containers shall be upright upon firm foundations or otherwise firmly secured. The possible effect on the outlet piping of settling shall be guarded against by a flexible connection or special fitting.

(8) Containers and equipment used inside of buildings or structures.

(a) When operational requirements make portable use of containers necessary, and their location outside of buildings or structures is impractical, containers and equipment are permitted to be used inside of buildings or structures in accordance with (b) through (k) of this subsection. In addition, there may be provisions of this section that are applicable to the particular use or occupancy.

(b) **"Containers in use"** means connected for use.

(c) Systems utilizing containers having a water capacity greater than 2 1/2-pounds (nominal 1 pound LP-gas capacity) shall be equipped with excess flow valves. Such excess flow valves shall be either integral with the container valves or in the connections to the container valve outlets.

(d) Regulators, when required, shall be either directly connected to the container valves or to manifolds connected to the container valves. The regulator shall be suitable for use with LP-gas. Manifolds and fittings connecting containers to pressure regulator inlets shall be designed for at least 250 p.s.i.g. service pressure.

(e) Valves on containers having water capacity greater than 50 pounds (nominal 20 pounds LP-gas capacity) shall be protected from damage while in use or storage.

(f) Aluminum piping or tubing shall not be used.

(g) Hose shall be designed for a working pressure of at least 250 p.s.i.g. Design, construction, and performance of hose, and hose connections shall have their suitability determined by listing by a nationally recognized testing agency. The hose length shall be as short as practical. Hoses shall be long enough to permit compliance with spacing provisions of (a) through (m) of this subsection, without kinking or straining, or causing hose to be so close to a burner as to be damaged by heat.

(h) Portable heaters, including salamanders, shall be equipped with an approved automatic device to shut off the flow of gas to the mainburner, and pilot if used, in the event of flame failure. Such heaters, having inputs above 50,000 BTU per hour, shall be equipped with either a pilot, which must be lighted and proved before the main burner can be turned on, or an electrical ignition system.

WAC 296-155-275 (Cont.)

Note: The provisions of this subdivision do not apply to portable heaters under 7,500 BTU per hour input when used with containers having a maximum water capacity of 2 1/2 pounds.

(i) Container valves, connectors, regulators, manifolds, piping, and tubing shall not be used as structural supports for heaters.

(j) Containers, regulating equipment, manifolds, pipe, tubing, and hose shall be located to minimize exposure to high temperatures or physical damage.

(k) Containers having a water capacity greater than 2 1/2 pounds (nominal 1 pound LP-gas capacity) connected for use shall stand on a firm and substantially level surface and, when necessary, shall be secured in an upright position.

(l) The maximum water capacity of individual containers shall be 245 pounds (nominal 100 pounds LP-gas capacity).

(m) For temporary heating, heaters (other than integral heater-container units) shall be located at least 6 feet from any LP-gas container. This shall not prohibit the use of heaters specifically designed for attachment to the container or to a supporting standard, provided they are designed and installed so as to prevent direct or radiant heat application from the heater onto the containers. Blower and radiant type heaters shall not be directed toward any LP-gas container within 20 feet.

(n) If two or more heater-container units, of either the integral or nonintegral type, are located in an unpartitioned area on the same floor, the container or containers of each unit shall be separated from the container or containers of any other unit by at least 20 feet.

(o) When heaters are connected to containers for use in an unpartitioned area on the same floor, the total water capacity of containers, manifolded together for connection to a heater or heaters, shall not be greater than 735 pounds (nominal 300 pounds LP-gas capacity). Such manifolds shall be separated by at least 20 feet.

(p) Storage of containers awaiting use shall be in accordance with subsections (10) and (11) of this section.

(9) Multiple container systems.

(a) Valves in the assembly of multiple container systems shall be arranged so that replacement of containers can be made without shutting off the flow of gas in the system. This provision is not to be construed as requiring an automatic changeover device.

(b) Heaters shall be equipped with an approved regulator in the supply line between the fuel cylinder and the heater unit. Cylinder connectors shall be provided with an excess flow valve to minimize the flow of gas in the event the fuel line becomes ruptured.

(c) Regulators and low-pressure relief devices shall be rigidly attached to the cylinder valves, cylinders, supporting standards, the building walls, or otherwise rigidly secured, and shall be so installed or protected from the elements.

(10) Storage of LPG containers. Storage of LPG within building is prohibited.

(11) Storage outside of buildings.

WAC 296-155-275 (Cont.)

(a) Storage outside of buildings, for containers awaiting use, shall be located from the nearest building or group of buildings, in accordance with Table D-3:

TABLE D-3

Quantity of LP-gas stored	Distance (feet)
500 lbs. Or less	0
501 to 6,000 lbs.	10
6,001, to 10,000 lbs.	20
Over 10,000 lbs.	25

(b) Containers shall be in a suitable ventilated enclosure or otherwise protected against tampering, or possible damage by vehicular traffic.

(12) Fire protection. Storage locations shall be provided with at least one approved portable fire extinguisher having a rating of not less than 20-B:C.

Note: For additional requirements relating to portable fire extinguishers see WAC 296-800-300.

[Statutory Authority: RCW 49.17.040 and 49.17.050. 86-03-074 (Order 86-14), § 296-155-275, filed 1/21/86; Order 76-29, § 296-155-275, filed 9/30/76; Order 74-26, § 296-155-275, filed 5/7/74, effective 6/6/74.]

WAC 296-155-280 Temporary heating devices.

(1) Ventilation.

(a) Fresh air shall be supplied in sufficient quantities to maintain the health and safety of workers. Where natural means of fresh air supply is inadequate, mechanical ventilation shall be provided.

(b) When heaters are used in confined spaces, special care shall be taken to provide sufficient ventilation in order to ensure proper combustion, maintain the health and safety of workers, and limit temperature rise in the area.

(2) Clearance and mounting.

(a) Temporary heating devices shall be installed to provide clearance to combustible material not less than the amount shown in Table D-4.

(b) Temporary heating devices, which are listed for installation with lesser clearances than specified in Table D-4, may be installed in accordance with their approval.

TABLE D-4

Heating appliances	Minimum clearance, (inches)		
	Sides	Rear	Chimney Connector
Room heater, circulating type	12	12	18
Room heater, radiant type	36	36	18

WAC 296-155-280 (Cont.)

(c) Heaters not suitable for use on wood floors shall not be set directly upon them or other combustible materials. When such heaters are used, they shall rest on suitable heat insulating material or at least 1-inch concrete, or equivalent. The insulating material shall extend beyond the heater 2 feet or more in all directions.

(d) Heaters used in the vicinity of combustible tarpaulins, canvas, or similar coverings shall be located at least 10 feet from the coverings. The coverings shall be securely fastened to prevent ignition or upsetting of the heater due to wind action on the covering or other material.

(3) Stability. Heaters, when in use, shall be set horizontally level, unless otherwise permitted by the manufacturer's markings.

(4) Oil-fired heaters.

(a) Flammable liquid-fired heaters shall be equipped with a primary safety control to stop the flow of fuel in the event of flame failure. Barometric or gravity oil feed shall not be considered a primary safety control.

(b) Heaters designed for barometric or gravity oil feed shall be used only with the integral tanks.

(c) Heaters specifically designed and approved for use with separate supply tanks may be directly connected for gravity feed, or an automatic pump, from a supply tank.

(5) Salamanders.

(a) Coverage. The use of solid fuel salamanders is prohibited in buildings and on scaffolds.

(b) General requirements.

(i) All solid fuel salamanders shall be designed and constructed for use with solid fuel, that is, coal or coke.

(ii) Solid fuel salamanders shall be equipped with a cover designed as part of the unit, to prevent spillage of burning material in case of tipover.

(iii) Salamanders shall be assembled in accordance with the instructions issued by the manufacturer.

(iv) The safeguards engineered into the product shall be maintained and any replacement shall be equivalent thereto.

(v) Salamanders shall be stored in such a manner as to prevent deterioration or damage to the unit.

(c) Operation.

(i) Manufacturers' instructions shall be followed by the user.

(ii) Each time a salamander is placed in operation it shall be checked to insure that it is functioning properly. Its operation shall be checked periodically thereafter.

WAC 296-155-280 (Cont.)

(iii) When concentrations of carbon monoxide attain quantities greater than 35 parts per million (0.0035 percent) to air volume at employee breathing levels, the salamander shall be extinguished unless additional natural or mechanical ventilation is provided to reduce the carbon monoxide content to permissible limits.

(iv) Tests for presence of carbon monoxide shall be made by a qualified person within 1 hour after the start of each shift and at least every 3 hours thereafter. If concentrations of carbon monoxide reach 20 parts per million to air volume, tests shall be made more frequently to determine if there is a continuing increase of carbon monoxide concentration.

(v) Records of all tests including the date, time, results obtained, and person making tests, shall be maintained for the duration of the project.

(vi) No persons shall be permitted to be within the area being heated by the salamanders except under the following circumstances: When tending the salamanders; when testing the atmosphere; or in emergency situations.

(vii) No employee shall be permitted to enter the heated area until notification is given to another person located outside. Periodic checks shall be made to ensure the health and safety of employees entering the heated area.

(viii) When a salamander is being used, the responsibility for its operation and maintenance shall be assigned to a qualified employee.

(ix) Salamanders shall not be moved, handled, or serviced while hot or burning, or while component parts are hot to the touch.

(x) Salamanders, when in use, shall be set level with the horizontal unless otherwise permitted by the manufacturer's markings. Salamanders shall be designed so as not to tip over when placed on a surface inclined 25° to the horizontal.

(xi) If equivalent protection and safety is afforded by alternative design, the 25° limitation may be reduced.

(xii) Salamanders not suitable for use on wood floors shall not be set directly upon them or other combustible materials. When such salamanders are used they shall rest on suitable insulating material or at least 1-inch concrete or equivalent. The insulating material shall extend beyond the salamander 2 feet or more in all directions.

(xiii) Salamanders used in the vicinity of tarpaulins, canvas, or similar coverings shall be located a safe distance from coverings and other combustible materials. The coverings shall be securely fastened to prevent ignition of the covering or upsetting of the salamanders due to wind action on the covering or other material.

(xiv) Salamanders in use shall be protected to prevent flame extinguishment.

WAC 296-155-280 (Cont.)

(d) Ventilation.

(i) Fresh air shall be supplied in sufficient quantities to maintain the health and safety of employees. Where natural means for fresh air supply is inadequate, mechanical ventilation shall be provided. Particular attention shall be given to confined spaces and pockets where heat and fumes may accumulate and employees may be present (roof areas, peaks, basement).

(ii) When salamanders are used in confined spaces, special care shall be taken to provide sufficient ventilation in order to assure proper combustion, maintain the health and safety of employees, and limit temperature rise in the area.

(e) Fueling.

(i) Salamanders shall be refueled only by a person trained in such operations.

(ii) Only a 1 day's supply of heater fuel shall be stored inside a building in the vicinity of the salamander. General fuel storage shall be outside the structure.

(iii) All fuel storage shall be maintained a minimum of 25 feet from source of ignition.

(f) Maintenance.

(i) The user shall comply with the maintenance instructions as provided by the manufacturer.

(ii) Equipment showing evidence of deterioration or damage that constitutes a safety or health hazard shall be removed from service.

(iii) Salamander repairs shall be performed in accordance with the manufacturer's recommendations, and replacement parts shall be equal to, the equivalent of, or the same as the original salamander equipment.

[Statutory Authority: Chapter 49.17 RCW. 94-15-096 (Order 94-07), § 296-155-280, filed 7/20/94, effective 9/20/94; Order 76-29, § 296-155-280, filed 9/30/76; Order 74-26, § 296-155-280, filed 5/7/74, effective 6/6/74.]

PART E
SIGNS, SIGNALS, AND BARRICADES

WAC 296-155-300 Accident prevention signs and tags.

(1) General. Signs and symbols required by this section shall be visible at all times when work is being performed, and shall be removed or covered promptly when the hazards no longer exist.

(2) Danger signs.

(a) Danger signs (see Figure E-1) shall be used only where an immediate hazard exists.

(b) Danger signs shall have red as the predominating color for the upper panel; black outline on the boarders; and a white lower panel for additional sign wording.

(3) Caution signs.

(a) Caution signs (see Figure E-2) shall be used only to warn against potential hazards or to caution against unsafe practices.

(b) Caution signs shall have yellow as the predominating color; black upper panel and borders; yellow lettering of "caution" on the black panel; and the lower yellow panel for additional sign wording. Black lettering shall be used for additional wording.

FIGURE E-1

FIGURE E-2

WAC 296-155-300 (Cont.)

(4) Exit signs.

(a) Every exit sign shall have the word “exit” in plainly legible letters not less than 6 inches high, with the principal strokes of letters not less than three-fourths-inch wide.

(b) Every exit sign shall be distinctive in color and shall provide contrast with decorations, interior finish, or other signs.

(5) Safety instruction signs. Safety instruction signs, when used, shall be white with green upper panel with white letters to convey the principal message. Any additional wording on the sign shall be black letters on the white background.

(6) Directional signs. Directional signs, other than automotive traffic signs specified in subsection (7) of this section, shall be white with a black panel and a white directional symbol. Any additional wording on the sign shall be black letters on the white background.

(7) Traffic signs.

(a) Construction areas shall be posted with legible traffic signs at points of hazard.

(b) All traffic control signs or devices used for protection of construction workers shall conform to and be set up according to American National Standards Institute D6.1-1988, Manual on Uniform Traffic Control Devices for Streets and Highways as amended by the Washington state department of transportation (M24-OT (HT)).

(8) Accident prevention tags.

(a) Accident prevention tags shall be used as a temporary means of warning employees of an existing hazard, such as defective tools, equipment, etc. They shall not be used in place of, or as a substitute for, accident prevention signs.

(b) Specifications for accident prevention tags similar to those in Table E-1 shall apply.

(i) Additional rules. American National Standards Institute (ANSI) Z35.1-1972, Specifications for Accident Prevention signs, and Z35.2-1968, Specifications for Accident Prevention Tags, contain rules which are additional to the rules prescribed in this section. The employer shall comply with ANSI Z35.1-1972 and Z35.2-1968 with respect to rules not specifically prescribed in this part.

WAC 296-155-300 (Cont.)

TABLE E-1

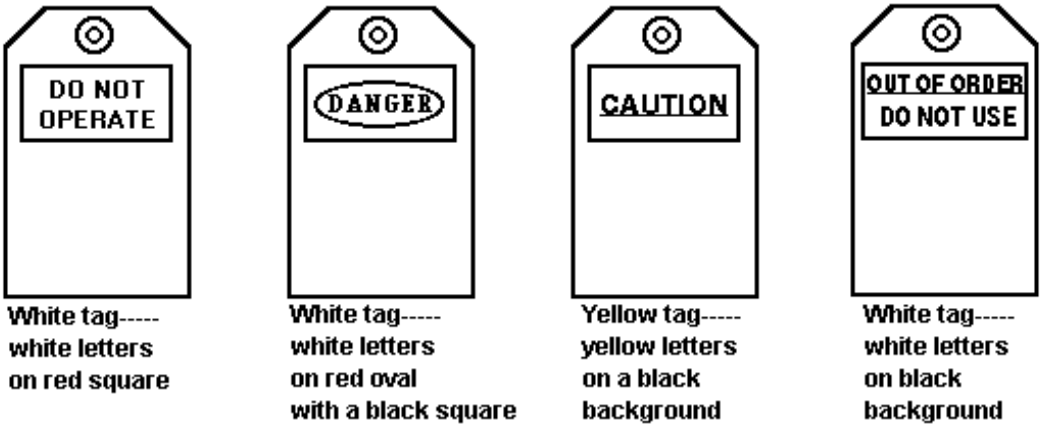

Basic Stock (Background)	Safety Colors (Ink)	Copy Specification (Letters)
White	Red	Do Not Operate
White	Black and Red	Danger
Yellow	Black	Caution
White	Black	Out of Order-Do Not Use

[Statutory Authority: Chapter 49.17 RCW. 93-19-142 (Order 93-04), § 296-155-300, filed 9/22/93, effective 11/1/93; 93-01-067 (Order 92-15), § 296-155-300, filed 12/11/92, effective 1/15/93. Statutory Authority: RCW 49.17.040 and 49.17.050. 86-03-074 (Order 86-14), § 296-155-300, filed 1/21/86; Order 74-26, § 296-155-300, filed 5/7/74, effective 6/6/74.]

WAC 296-155-305 Signaling and Flaggers.

(1) (a) Except as otherwise required in these rules, traffic control devices, signs and barricades must be set up and used according to the guidelines and recommendations in the Federal Highway Administration's: Manual on Uniform Traffic Control Devices (MUTCD), 1995 Edition-Revision 4, part VI, Standards and Guides for Traffic Controls for Street and Highway Construction, Maintenance, Utility, and Incident Management Operations.

(b) Job site workers with specific traffic control responsibilities must be trained in traffic control techniques, device usage, and placement.

Note:

- You may purchase copies of the MUTCD by writing:

  US Government Printing Office
  Superintendent of Documents
  Mail Stop: SSOP,
  Washington DC 20402-9328

- You may read a copy of the MUTCD at any department of labor and industries (L&I) service location.

(2) (a) Flaggers or other appropriate traffic controls must be used when signs, signals, and barricades do not provide necessary protection from traffic at operations on or adjacent to a highway or street.

WAC 296-155-305 (Cont.)

(b) Flaggers are to be used only when other reasonable traffic control methods will not adequately control traffic in the work zone.

(3) Flagger signaling directions must conform to the guidelines and recommendations of MUTCD, 1995 Edition-Revision 4, Part VI, as amended by the Washington state department of transportation (WSDOT) pamphlet, "*Washington State Modifications to the MUTCD*." (M 24-01)

(4) (a) Flagger hand signaling must be by sign paddles or lights approved by WSDOT. During emergency situations, red flags may be used to draw a driver's attention to particularly hazardous conditions. In nonemergency situations, a red flag may be held in a flagger's free hand to supplement the use of a sign paddle or lights.

(b) When sign paddles are used, they must comply with the requirements of MUTCD, 1995 Edition-Revision 4, Part VI. Specifically, sign paddles:

- Must be at least 18 inches in diameter;
- Printed with letters at least 6 inches high;
- The "STOP" side of the paddle must have a red background with white lettering; and
- The "SLOW" side of the paddle must have an orange background with black lettering.

(c) When hand signaling is used during periods of darkness, sign paddles must be retroreflective or illuminated in the same manner as signs.

(5) (a) While flagging during daylight hours, a flagger must, at a minimum, wear:

- A high visibility safety garment designed according to Class 2 specifications in ANSI/ISEA 107-1999, American National Standard for High-Visibility Safety Apparel. Specifically, a garment containing at least 775 square inches of background material and 201 square inches of retroreflective material that encircles the torso and is placed to provide 360 degrees visibility around the flagger. The acceptable high visibility colors are fluorescent yellow-green, fluorescent orange-red or fluorescent red; and
- A high visibility hard hat. The acceptable high visibility colors are white, yellow, yellow-green, orange or red.
- When snow or fog limit visibility, a flagger must wear pants of any high visibility color other than white.

(b) While flagging during hours of darkness, a flagger must at least wear:

- A high visibility safety garment designed according to Class 2 specifications in ANSI/ISEA 107-1999 over white coveralls, or other coveralls or trousers that have retroreflective banding on the legs designed according to ANSI/ISEA 107-1999 standards; and
- A high visibility hard hat that is marked with at least 12 square inches of retroreflective material applied to provide 360 degrees of visibility.
- For thepurpose of this rule, "hours of darkness" means one-half hour before sunset and one-half hour after sunrise.
- When snow or fog limit visibility, pants, coveralls, or rain gear in a highly visible color with retroreflective banding on the legs designed according to ANSI/ISEA 107-1999 must be worn.

WAC 296-155-305 (Cont.)

Note: High visibility safety garments made of mesh material may be worn by flaggers if they meet the chromaticity requirements of ANSI/ISEA 107-1999, American National Standard for High-Visibility Safety Apparel.

Note:

- You may purchase copies of ANSI/ISEA 107-1999 by writing:

  American National Standards Institute
  11 West 42nd Street
  New York, NY 10036

  or

  Contacting the ANSI web site at:
  http://web.ansi.org/

- You may read a copy of ANSI/ISEA 107-1999 at any Washington state library.

(6) (a) Each flagger must be trained every three years.

(b) Flagger training must be based upon the Manual on Uniform Traffic Control Devices-1995 Edition-Revision 4, Part VI, as amended by the Washington state department of transportation pamphlet, "*Washington State Modifications to the MUTCD*." (M 24-01)

(c) Personnel that have not completed a flagger-training course may be assigned duties as flaggers only during emergencies when a sudden, generally unexpected, set of circumstances demands immediate attention. Such emergency assignments are temporary and last only until a certified flagger can be put into the position. For the purpose of this rule, "emergency" means an unforeseen occurrence endangering life, limb, or property.

(7) (a) Each flagger must have in their possession either a valid Washington traffic control flagger card or a valid flagger card from a state, such as Oregon, Idaho or Montana, having flagger training reciprocity with Washington.

(b) The flagger card must show the following:

- Verification that the flagger training prescribed in subsection (6) of this section is completed;
- Date the flagger received their flagger training;
- Name of the instructor providing the flagger training;
- Name of the state that issued the flagger card;
- The card's expiration date; and
- Flagger's picture or a statement that says "valid with photo ID."

(8) When it is not possible to position work zone flaggers so they are not exposed to traffic or equipment approaching them from behind, the employer, responsible contractor and/or project owner must develop and use a method to ensure that flaggers have adequate warning of such traffic and equipment approaching from behind the flagger.

WAC 296-155-305 (Cont.)

Note: The following are some nonmandatory examples of methods that may be used to adequately warn flaggers:

- Mount a mirror on the flagger's hard hat.
- Use a motion detector with an audible warning.
- Use a spotter.
- Use "jersey" barriers.

The department recognizes the importance of adequately trained flaggers and supports industry efforts to improve the quality of flagger training. However, training alone is not sufficient to comply with the statutory requirement of revising flagger safety standards to improve options available that ensure flagger safety and that flaggers have adequate visual warning of objects approaching from behind them. Likewise, the department believes that standard backup alarms, which are already required on construction equipment, do not meet the intent of the legislature on this issue.

(9) (a) The employer, responsible contractor and/or project owner must conduct an orientation that familiarizes the flagger with the job site each time the flagger is assigned to a new project or when job site conditions change significantly. The orientation must include, but is not limited to:

- The flagger's role and location on the job site;
- Motor vehicle and equipment in operation at the site;
- Job site traffic patterns;
- Communications and signals to be used between flaggers and equipment operators;
- On-foot escape route; and
- Other hazards specific to the job site.

(b) When flaggers are used on a job that will last more than one day, the employer, responsible contractor and/or project owner must keep on-site, a current site specific traffic control plan. The purpose of this plan is to help move traffic through or around the construction zone in a way that protects the safety of the traveling public, pedestrians and workers. The plan must include, but is not limited to, such items as the following when they are appropriate:

- Sign use and placement;
- Application and removal of pavement markings;
- Construction;
- Scheduling;
- Methods and devices for delineation and channelization;
- Placement and maintenance of devices;
- Placement of flaggers;
- Roadway lighting;
- Traffic regulations; and
- Surveillance and inspection.

(10) For all flagging operations a three (3) sign advance warning sequence is required on all roadways with a speed limit below 45 mph. A four (4) sign advance warning sequence is required on all roadways with a 45 mph or higher speed limit.

WAC 296-155-305 (Cont.)

Note: The following table contains required spacing for advance warning sign placement.

Road Type	Distances	Between	Advance Warning	Signs
	A	B	C	D
Urban low speed.*	200 ft.	200 ft.	200 ft.	N/A
Urban high speed.*	350 ft.	350 ft.	350 ft.	350 ft.
Rural	500 ft.	500 ft.	500 ft.	500 ft.
Expressway/ Freeway	1,000 ft.	1,600 ft.	2,600 ft.	2,600 ft.

* Speed category to be determined by Washington state department of transportation in cooperation with local jurisdictions.

(11) To protect flaggers, employers, responsible contractors and/or project owners must ensure that:

(a) Flagger workstations are illuminated during hours of darkness by floodlights.

- In no case must floodlighting be permitted to create a disabling glare for drivers. The adequacy of floodlight placement and elimination of potential glare can best be determined by driving through and observing the floodlighted area from each direction on the main roadway after initial floodlight setup.
- Emergency situations are exempt from these illumination requirements. For the purpose of this rule, “emergency” means an unforeseen occurrence endangering life, limb, or property.

(b) Warning signs reflect the actual condition of the work zone. When not in use, warning signs must either be taken down or covered.

(c) Flaggers are not assigned other duties while engaged in flagging activities.

(d) Flaggers do not use devices (for example, cell phones, pagers, radio headphone, etc.,) that may distract the vision, hearing, or attention of the flagger. Devices such as two-way radios used for communications between flaggers to direct traffic or ensure flagger safety are acceptable.

(e) Flaggers receive appropriate breaks from flagging so they can remain attentive and alert. For the purpose of this rule, “appropriate break” means a rest period of at least 10 minutes, on the employer's time, for each 4 hours of working time.

- Rest periods must be scheduled as near as possible to the midpoint of the work period.
- A flagger must not be allowed to work more than three hours without a rest period.
- Scheduled rest periods are not required where the nature of the work allows a flagger to take intermittent rest periods equivalent to 10 minutes for each 4 hours worked.

[Statutory Authority: RCW 49.17.010, .040, .050; Chapter 239, Laws of 2000 (ESHB 2647); and Chapter 34.05 RCW. 01-04-015 (Order 00-03), § 296-155-305, filed 01/26/01, effective 02/28/01. Statutory Authority: RCW 49.17.010, .040, .050. 00-12-018 (Order 00-03), § 296-155-305, filed 05/26/00, effective 05/26/00. Statutory Authority: Chapter 49.17 RCW. 93-19-142 (Order 93-04), § 296-155-305, filed 9/22/93, effective 11/1/93; 93-01-067 (Order 92-15), § 296-155-305, filed 12/11/92, effective 1/15/93; 89-11-035 (Order 89-03), § 296-155-305, filed 5/15/89, effective 6/30/89. Statutory Authority: RCW 49.17.040 and 49.17.050. 86-03-074 (Order 86-14), § 296-155-305, filed 1/21/86; Order 76-6, § 296-155-305, filed 3/1/76; Order 74-26, § 296-155-305, filed 5/7/74, effective 6/6/74.]

WAC 296-155-310 Barricades. Barricades for protection of employees shall conform to the portions of the American National Standards Institute D6.1-1988, Manual on Uniform Traffic Control Devices for Streets and Highways, as amended by the Washington state department of highways, (M24-01 (HT)), relating to barricades.
Statutory Authority: Chapter 49.17 RCW. 93-19-142 (Order 93-04), § 296-155-310, filed 9/22/93, effective 11/1/93; Order 74-26, § 296-155-310, filed 5/7/74, effective 6/6/74.]

WAC 296-155-315 Definitions applicable to this part.

(1) **"Barricade"** means an obstruction to deter the passage of persons or vehicles.

(2) **"Signs"** are the warnings of hazard, temporarily or permanently affixed or placed, at locations where hazards exist.

(3) **"Signals"** are moving signs, provided by workers, such as flagger, or by devices, such as flashing lights, to warn of possible or existing hazards.

(4) **"Tags"** are temporary signs, usually attached to a piece of equipment or part of a structure, to warn of existing or immediate hazards.

[Statutory Authority: Chapter 49.17 RCW. 94-15-096 (Order 94-07), § 296-155-315, filed 7/20/94, effective 9/20/94; Order 76-6, § 296-155-315, filed 3/1/76.]

PART F
MATERIAL HANDLING, STORAGE, USE AND DISPOSAL

WAC 296-155-325 General requirements for storage.

(1) General.

(a) All materials stored in tiers shall be stacked, racked, blocked, interlocked, or otherwise secured to prevent sliding, falling or collapse.

(b) Maximum safe load limits of floors within buildings and structures, in pounds per square foot, shall be conspicuously posted in all storage areas, except for floor or slab on grade. Maximum safe loads shall not be exceeded.

(c) Aisles and passageways shall be kept clear to provide for the free and safe movement of material handling equipment or employees. Such areas shall be kept in good repair.

(d) When a difference in road or working levels exist, means such as ramps, blocking, or grading shall be used to ensure the safe movement of vehicles between the two levels.

(2) Material storage.

(a) (i) Material stored inside buildings under construction shall not be placed within 6 feet of any hoistway or inside floor openings, nor within 10 feet of an exterior wall which does not extend above the top of the material stored.

(ii) Temporary floors, used in steel erection, concrete forms and shoring (i.e., stripped forms, shoring jacks, clamps, steel rods or pipes, base plates, etc.) placed within close proximity to an open-sided floor for movement to another tier for placement, shall be considered "in-process equipment" and subject to the provisions contained in Parts "O" and "P" of this standard. When this type equipment is to be left overnight or for longer periods of time it shall be anchored and braced to prevent displacement in any direction. In addition this equipment shall be subject to the provisions of this subsection while in "interim storage."

(b) Each employee required to work on stored material in silos, hoppers, tanks, and similar storage areas shall be equipped with personal fall arrest equipment meeting the requirements of chapter 296-155 WAC, Part C-1.

(c) Noncompatible materials shall be segregated in storage.

(d) Bagged materials shall be stacked by stepping back the layers and cross-keying the bags at least every 10 bags high.

(i) When cement and lime is delivered in paper bags they shall be carefully handled to prevent the bags bursting.

(ii) Cement and lime bags shall not be piled more than ten bags high except when stored in bins or enclosures built for the purpose of storage.

(iii) When bags are removed from the pile, the length of the pile shall be kept at an even height, and the necessary step backs every five bags maintained.

WAC 296-155-325 (Cont.)

(iv) Persons handling cement and lime bags shall wear eye protection which prevents contact between the substance and the worker's eyes (such as goggles or other sealed eye protection) and shall wear long sleeve shirts with close fitting collar and cuffs.

(v) Persons shall be warned against wearing clothing that has become hard and stiff with cement.

(vi) Persons shall be instructed to report any susceptibility of their skin to cement and lime burns.

(vii) A hand cream or Vaseline and eye wash shall be provided and kept ready for use to prevent burns.

(viii) Lime shall be stored in a dry place to prevent a premature slacking action that may cause fire.

(e) Materials shall not be stored on scaffolds or runways in excess of supplies needed for immediate operations.

(f) Brick stacks shall not be more than 7 feet in height. When a loose brick stack reaches a height of 4 feet, it shall be tapered back 2 inches in every foot of height above the 4-foot level.

(i) Brick shall never be stacked, for storage purposes, on scaffolds or runways.

(ii) When delivering brick on scaffolds inside the wall lines in wheelbarrows, they shall be dumped toward the inside of the building and not toward the wall.

(iii) Blocks shall always be stacked and not thrown in a loose pile.

(g) When masonry blocks are stacked higher than 6 feet, the stack shall be tapered back one-half block per tier above the 6-foot level.

(i) When blocks are stacked inside a building, the piles shall be so distributed as not to overload the floor on which they stand.

(ii) Blocks shall not be dropped or thrown from an elevation or delivered through chutes.

(h) Lumber:

(i) Used lumber shall have all nails withdrawn before stacking.

(ii) Lumber shall be stacked on level and solidly supported sills.

(iii) Lumber shall be so stacked as to be stable and self-supporting.

(iv) Lumber stacks shall not exceed 20 feet in height provided that lumber to be handled manually shall not be stacked more than 16 feet high.

(v) All stored lumber shall be stacked on timber sills to keep it off the ground. Sills shall be placed level on solid supports.

WAC 296-155-325 (Cont.)

(vi) Cross strips shall be placed in the stacks when they are stacked more than four feet high.

(i) Structural steel, poles, pipe, bar stock, and other cylindrical materials, unless racked, shall be stacked and blocked so as to prevent spreading or tilting.

(i) Persons handling reinforcing steel shall wear heavy gloves.

(ii) When bending of reinforcing steel is done on the job, a strong bench shall be provided, set up on even dry ground or a floor for the persons to work on.

(iii) Structural steel shall be carefully piled to prevent danger of members rolling off or the pile toppling over.

(iv) Structural steel shall be kept in low piles, consideration being given to the sequence of use of the members.

(v) Corrugated and flat iron shall be stacked in flat piles, with the piles not more than four feet high and spacing strips shall be placed between each bundle.

(j) Sand, gravel and crushed stone.

(i) Stock piles shall be frequently inspected to prevent their becoming unsafe by continued adding to or withdrawing from the stock.

(ii) If material becomes frozen, it shall not be removed in a manner that would produce an overhang.

[Statutory Authority: Chapter 49.17 RCW. 95-10-016, § 296-155-325, filed 4/25/95, effective 10/1/95; 94-15-096 (Order 94-07), § 296-155-325, filed 7/20/94, effective 9/20/94. Statutory Authority: RCW 49.17.040 and 49.17.050. 86-03-074 (Order 86-14), § 296-155-325, filed 1/21/86; Order 74-26, § 296-155-325, filed 5/7/74, effective 6/6/74.]

WAC 296-155-329 Qualified person-Rigging. Qualified person - A person who, by possession of a recognized degree or certificate of professional standing, or who, by extensive knowledge, training, and experience, has successfully demonstrated the ability to solve or resolve problems relating to the subject matter. Also has authorization or authority by the nature of their position to take prompt corrective measures to eliminate them. The person shall be knowledgeable in the requirements of this part.

[Statutory Authority: Chapter 49.17.010, .040, .050, .060 RCW. 98-13-069 (Order 94-29), § 296-155-229, filed 6/15/98, effective 8/15/98.]

WAC 296-155-330 Rigging equipment for material handling.

(1) General.

(a) Rigging equipment for material handling shall be inspected prior to use on each shift and as necessary during its use to ensure that it is safe. Defective rigging equipment shall be removed from service.

(b) Rigging equipment shall not be loaded in excess of its recommended safe working load, as prescribed in Tables F-1 through F-20 in this part and shall comply with ANSI/ASME B30.9-1996.

(c) Rigging equipment, when not in use, shall be removed from the immediate work area so as not to present a hazard to employees.

WAC 296-155-330 (Cont.)

(d) Special rigging accessories (i.e., spreader bars, grabs, hooks, clamps, etc.) or other lifting accessories shall be marked with the rated capacity. All components shall be proof tested to 125 percent of the rated load prior to the first use. Permanent records shall be maintained on the job site for all special rigging accessories.

(2) Alloy steel chains. Chains used for overhead lifting shall be proof tested alloy steel.

(a) Welded alloy steel chain slings shall have permanently affixed durable identification stating size, grade, rated capacity, and sling manufacturer.

(b) Hooks, rings, oblong links, pear-shaped links, welded or mechanical coupling links, or other attachments, when used with alloy steel chains, shall have a rated capacity at least equal to that of the chain.

(c) The use of job or shop hooks and links, or makeshift fasteners, formed from bolts, rods, etc., or other such attachments, shall be prohibited.

(d) Rated capacity (working load limit) for alloy steel chain slings shall conform to the values shown in Table F-1.

(e) Whenever wear at any point of any chain link exceeds that shown in Table F-2, the assembly shall be removed from service.

(f) If at any time any three foot length of chain is found to have stretched one-third the length of a link it shall be discarded.

(g) The practice of placing bolts, nails, or cold shuts between two links to shorten chains is prohibited.

(h) Splicing broken chains by inserting a bolt between two links with the heads of the bolt and the nut sustaining the load, or passing one link through another and inserting a bolt or nail to hold it, is prohibited.

(i) Wherever annealing of chains is attempted, it shall be done in properly equipped annealing furnaces and under the direct supervision of a competent person.

(3) Wire rope.

(a) Table F-3 through F-14 shall be used to determine the safe working loads of various sizes and classifications of improved plow steel wire rope and wire rope slings with various types of terminals. For sizes, classifications, and grades not included in these tables, the safe working load recommended by the manufacturer for specific, identifiable products shall be followed, provided that a safety factor of not less than 5 is maintained.

(b) Protruding ends of strands in splices on slings and bridles shall be covered or blunted.

(c) Wire rope shall not be secured by knots.

(d) The following limitations shall apply to the use of wire rope:

WAC296-155-330 (Cont.)

(i) An eye splice made in any wire rope shall have not less than three full tucks.

Note: This requirement shall not preclude the use of another form of splice or connection which can be shown to be as efficient and which is not otherwise prohibited.

(ii) Except for eye splices in the ends of wires and for endless rope slings, each wire rope used in hoisting or lowering, or in pulling loads, shall consist of one continuous piece without knot or splice.

(iii) Wire rope shall not be used, if in any length of eight diameters, the total number of visible broken wires exceeds 10 percent of the total number of wires, or if the rope shows other signs of excessive wear, corrosion, or defect.

(e) When U-bolt wire rope clips are used to form eyes, Table F-20 shall be used to determine the number and spacing of clips.

(f) When used for eye splices, the U-bolt shall be applied so that the “U” section is in contact with the dead end of the rope.

(g) U-Bolt wire rope clips shall be made of drop-forged steel.

Note: See Table F-20 for number of clamps and spacing requirements.

CORRECT METHOD OF ATTACHING WIRE ROPE CLIPS

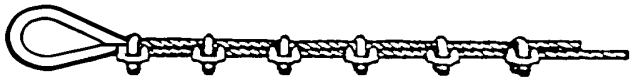

U-Bolt of all clips on dead end of rope

(h) Slings shall not be shortened with knots or bolts or other makeshift devices.

(i) Thimbles shall be used in cable eyes whenever practicable.

(j) The clamp nuts shall be tightened up frequently during the operation to prevent slipping.

(4) Natural rope, and synthetic fiber.

(a) General. When using natural or synthetic fiber rope slings, Tables F-15, F-16, F-17 and F-18 shall apply.

(b) All splices in rope slings provided by the employer shall be made in accordance with fiber rope manufacturers' recommendations.

(i) In manila rope, eye splices shall contain at least three full tucks, and short splices shall contain at least six full tucks (three on each side of the centerline of the splice).

(ii) In layed synthetic fiber rope, eye splices shall contain at least four full tucks, and short splices shall contain at least eight full tucks (four on each side of the centerline of the splice).

WAC 296-155-330 (Cont.)

(iii) Strand end tails shall not be trimmed short (flush with the surface of the rope) immediately adjacent to the full tucks. This precaution applies to both eye and short splices and all types of fiber rope. For fiber ropes under 1-inch diameter, the tails shall project at least six rope diameters beyond the last full tuck. For fiber ropes 1-inch diameter and larger, the tails shall project at least 6 inches beyond the last full tuck. In applications where the projecting tails may be objectionable, the tails shall be tapered and spliced into the body of the rope using at least two additional tucks (which will require a tail length of approximately six rope diameters beyond the last full tuck).

(iv) For all eye splices, the eye shall be sufficiently large to provide an included angle of not greater than 60° at the splice when the eye is placed over the load or support.

(v) Knots shall not be used in lieu of splices.

(vi) All fibre rope used for hoisting purposes or for the support of scaffolds, or any part thereof, shall be of high grade Manila hemp (abaca). Fibre rope used for the support of scaffolds, or any part thereof, except rope used for lashing or tying purposes, shall be not less than 3/4-inch in diameter.

(vii) The maximum safe working load for fibre rope shall not exceed the maximum strength as shown in the following table:

STRENGTH OF HIGH GRADE MANILA (ABACA) ROPE
COMMON LAY THREE STRAND

Approximate Diameter in inches	Circumference in inches	Safe Load in pounds
3/16 (6 yarns)	1/2	98
1/4 (6 yarns)	3/4	116
5/16 (6 yarns)	1	200
3/8 (12 yarns)	1-1/8	241
7/16 (15 yarns)	1-1/4	291
15/32 (18 yarns)	1-3/8	350
1/2 (21 yarns)	1-1/2	408
9/16	1-3/4	526
5/8	2	666
3/4	2-1/4	816
13/16	2-1/2	983
7/8	2-3/4	1,166
1	3	1,366
1-1/16	3-1/4	1,683
1-1/8	3-1/2	1,833
1-1/4	3-3/4	2,083
1-5/16	4	2,365
1-3/8	4-1/4	2,666
1-1/2	4-1/2	2,916

WAC 296-155-330 (Cont.)

Note: This table is based on data contained in the U.S. Department of Commerce circular of the Bureau of Standards, No. 324.

(5) Synthetic webbing (nylon, polyester, and polypropylene).

(a) The employer shall have each synthetic web sling marked or coded to show:

(i) Name or trademark of manufacturer.

(ii) Rated capacities for the type of hitch.

(iii) Type of material.

(b) Rated capacity shall not be exceeded.

(6) Shackles and hooks.

(a) Table F-19 shall be used to determine the safe working loads of various sizes of shackles, except that higher safe working loads are permissible when recommended by the manufacturer for specific, identifiable products, provided that a safety factor of not less than 5 is maintained.

(b) The manufacturer's recommendations shall be followed in determining the safe working loads of the various sizes and types of specific and identifiable hooks. All hooks for which no applicable manufacturer's recommendations are available shall be tested to twice the intended safe working load before they are initially put into use. The employer shall maintain a record of the dates and results of such tests.

(c) Hooks shall not be modified by welding and/or drilling unless written approval by the manufacturer has been received.

(d) No open hook shall be used to hoist a bucket, cage, spreader, or skip, nor in any circumstances where the dislodgment of the hook could cause a risk of injury to workers. A safety-hook, mousing, or shackle shall be employed in such circumstances.

(e) When shackles are used, shackle pins shall be secured to prevent accidental withdrawal.

(7) Slings.

(a) When slings are provided as a part of the hoisting equipment, every precaution shall be taken to keep them in a serviceable condition.

(i) Wire rope slings shall be frequently inspected and oiled.

(ii) Slings shall not be left where they can be damaged by traffic or form stumbling hazards.

(iii) Blocks or heavy bagging shall be used at corners of the load to protect the sling from sharp bending.

(iv) Wire rope which has been welded or been subject to welding of any kind shall not be used.

WAC 296-155-330 (Cont.)

(v) The wire rope shall not be burned off with heat. This may weld the ends of the wires and strands together.

(b) When a load is lifted by a multiple rope sling the sling shall be so arranged that the strain can be equalized between the ropes.

(i) When using a sling with both ends engaged in the hoisting block, the sling shall be adjusted so as to equalize the stress.

(ii) Slings shall be placed on the load at safe lifting angles.

(8) Material handling-General.

(a) When necessary to store building material on public thoroughfares, care shall be exercised to see that it is so piled or stacked as to be safe against collapse or falling over.

(b) Material shall be so located as not to interfere with, or present a hazard to employees, traffic or the public.

(9) Placing and removal of forms.

(a) When moved or raised by crane, cableway, A-frame, or similar mechanical device, forms shall be securely attached to slings having a minimum safety factor of five. Use of No. 9 tie wire, fiber rope, and similar makeshift lashing shall be prohibited.

(b) Taglines shall be used in moving panels or other large sections of forms by crane or hoist.

(c) All hoisting equipment, including hoisting cable used to raise and move forms shall have a minimum safety factor incorporated in the manufacturer's design, and the manufacturer's recommended loading shall not be exceeded. Field-fabricated or shop fabricated hoisting equipment shall be designed or approved by a registered professional engineer, incorporating a minimum safety factor of five in its design. Panels and built-up form sections shall be equipped with metal hoisting brackets for attachment of slings.

(10) Precast concrete and tilt-up operations.

(a) It shall be the responsibility of the contractor to use accessories which are designed to be compatible.

(b) The design capacity of all lifting devices and accessories shall be known. The devices and accessories with the appropriate capacity shall be used.

(c) Prior to pouring the panels of a tilt-up type construction job, a set of plans or job specifications, including lifting procedures, shall be drawn up.

(i) These plans shall be at the job site and made available upon request.

(ii) Any changes made in the rigging procedure of a tilt-up panel or slab shall provide the same degree of safety as required by the original plans.

WAC 296-155-330 (Cont.)

(iii) The plans or specifications shall contain the following information:

(A) The type, size, and location of all lifting inserts.

(B) The type, size, and location of all brace inserts or fittings for guy wires in each panel and floor or support.

(C) The size of braces or guys to be used.

(D) The compression strength which concrete panels must attain prior to being lifted.

(iv) The following conditions shall be included in the erection process and shall be incorporated in the design plan:

(A) Inserts to be installed for lifting sections of tilt-up precast panels shall be designed mechanically to maintain a safety factor of three.

(B) Lifting inserts which are embedded or otherwise attached to precast concrete members, other than the tilt-up members, shall be capable of supporting at least four times the maximum intended load applied or transmitted to them.

(C) The compression strength of the concrete shall be such that when the proper type, size, and amount of inserts are installed a minimum safety factor of two will be maintained.

(v) Lifting hardware shall be capable of supporting at least five times the maximum intended load applied or transmitted to the lifting hardware.

(vi) Lifting bolts or other lifting devices which have been bent, worn, or are otherwise defective shall be discarded.

(vii) Manufactured products shall not be altered in a manner which would reduce the safe working load to less than its original value.

(viii) Inserts shall be positioned so that bolts, or lifting devices, when inserted, will be perpendicular to the face on which they are placed.

(d) Design of the panels and layout of the pour shall be made in such a manner so that when picking, the top of the panel will be away from the crane. If this is not possible, the contractor shall consult with a representative of the department and the crane company involved to determine the procedure to be followed in lifting and placing in its permanent position safely. Panels shall be lifted and handled in such a manner that they will not strike the hoisting equipment, in case of failure.

(e) A qualified rigging person shall be designated and shall consult with the crane operator on lifting procedures prior to making the pick. The qualified rigging person shall be located in such a position during the pick of the panel that they can observe both the crane operator and the employees working in the immediate area.

WAC 296-155-330 (Cont.)

(11) Rigging in prestressed and post tensioned.

(a) Stressed members shall be handled at pick points specifically designated on the manufacturer's drawings.

(b) Stressed members shall be lifted with lifting devices recommended by the manufacturer or the engineer in charge.

(c) No one shall be allowed under stressed members during lifting and erection.

[Statutory Authority: Chapter 49.17.010, .040, .050, .060 RCW. 98-13-069 (Order 94-29), § 296-155-330, filed 6/15/98, effective 8/15/98. Chapter 49.17 RCW. 94-15-096 (Order 94-07), § 296-155-330, filed 7/20/94, effective 9/20/94. Statutory Authority: RCW 49.17.040 and 49.17.050. 86-03-074 (Order 86-14), § 296-155-330, filed 1/21/86. Statutory Authority: RCW 49.17.040, 49.17.150, and 49.17.240. 79-08-115 (Order 79-9), § 296-155-330, filed 7/31/79; Order 76-29, § 296-155-330, filed 9/30/76; Order 74-26, § 296-155-330, filed 5/7/74, effective 6/6/74.]

WAC 296-155-335 Disposal of waste materials.

(1) Whenever materials are dropped more than 20 feet to any point lying outside the exterior walls of the building, an enclosed chute of wood, or equivalent material, shall be used. For the purpose of this subsection, an enclosed chute is a slide, closed in on all sides, through which material is moved from a high place to a lower one.

(2) When debris is dropped without the use of chutes, the area onto which the material is dropped shall be completely enclosed with barricades not less than 42 inches high and not less than 20 feet back from the projected edge of the opening above. Signs warning of the hazard of falling materials shall be posted at each level. Removal shall not be permitted in this lower area until debris handling ceases above.

(3) All scrap lumber, waste material, and rubbish shall be removed from the immediate work area as the work progresses.

(4) Disposal of waste material or debris by burning shall comply with local fire regulations.

(5) All solvent waste, oily rags, and flammable liquids shall be kept in fire resistant covered containers until removed from the worksite.

[Statutory Authority: RCW 49.17.040 and 49.17.050. 86-03-074 (Order 86-14), § 296-155-335, filed 1/21/86; Order 74-26, § 296-155-335, filed 5/7/74, effective 6/6/74.]

WAC 296-155-34901 Table F-1.

TABLE F-1
RATED CAPACITY (WORKING LOAD LIMIT),
FOR ALLOY STEEL CHAIN SLINGS*
RATED CAPACITY
(WORKING LOAD LIMIT), POUNDS

Table F-1: PART 1-Double Slings

		Double Sling Vertical Angle[1]		
Chain Size, Inches	**Single Branch Sling- 90 degree Loading**	**30 degree**	**45 degree Horizontal Angle[2]**	**60 degree**
		60 degree	**45 degree**	**30 degree**
1/4	3,250	5,560	4,550	3,250
3/8	6,600	11,400	9,300	6,600
1/2	11,250	19,500	15,900	11,250
5/8	16,500	28,500	23,300	16,500
3/4	23,000	39,800	32,500	23,000
7/8	28,750	49,800	40,600	28,750
1	38,750	67,100	54,800	38,750
1-1/8	44,500	77,000	63,000	44,500
1-1/4	57,500	99,500	81,000	57,500
1-3/8	67,000	116,000	94,000	67,000
1-1/2	80,000	138,000	112,500	80,000
1-3/4	100,000	172,000	140,000	100,000

WAC 296-155-34901 (Cont.) Table F-1 Part 2.

Table F-1: PART 2-Triple and Quadruple Slings

		Triple and Quadruple Sling Vertical Angle[1]		
Chain Size, Inches	**Single Branch Sling-90 degree Loading**	**30 degree**	**45 degree Horizontal Angle[2]**	**60 degree**
		60 degree	**45 degree**	**30 degree**
1/4	3,250	8,400	6,800	4,900
3/8	6,600	17,000	14,000	9,900
1/2	11,250	29,000	24,000	17,000
5/8	16,000	43,000	35,000	24,500
3/4	23,000	59,500	48,500	34,500
7/8	28,750	74,500	61,000	43,000
1	38,750	101,000	82,000	58,000
1-1/8	44,500	115,500	94,500	66,500
1-1/4	57,500	149,000	121,500	86,000
1-3/8	67,000	174,000	141,000	100,500
1-1/2	80,000	207,000	169,000	119,500
1-3/4	100,000	258,000	210,000	150,000

1 Rating of multileg slings adjusted for angle of loading measured as the included angle between the inclined leg and the vertical.
2 Rating of multileg slings adjusted for angle of loading between the inclined leg and the horizontal plane of the load.
* Other grades of proof tested steel chain include proof coil, BBB coil and hi-test chain. These grades are not recommended for overhead lifting and therefore are not covered by this standard.
[Order 74-26, § 296-155-335 (part), Table F-1 (codified as WAC 296-155-34901), filed 5/7/74, effective 6/6/74.]

WAC 296-155-34902 Table F-2.

TABLE F-2
MAXIMUM ALLOWABLE WEAR AT ANY POINT OF LINK

Chain Size (inches)	Maximum Allowable Wear (inch)
1/4	3/64
3/8	5/64
1/2	7/64
5/8	9/64
3/4	5/32
7/8	11/64
1	3/16
1-1/8	7/32
1-1/4	1/4
1-3/8	9/32
1-1/2	5/16
1-3/4	11/32

[Order 74-26, § 296-155-335 (part), Table F-2 (codified as WAC 296-155-34902), filed 5/7/74, effective 6/6/74.]

WAC 296-155-34903 Table F-3.

TABLE F-3
RATED CAPACITIES FOR SINGLE LEG SLINGS
6x19 AND 6x37 CLASSIFICATION
IMPROVED PLOW STEEL GRADE ROPE
WITH FIBER CORE (FC)

Rope		Rated Capacities, Tons (2,000 lb)								
Dia.	Constr.	Vertical			Choker			Vertical Basket*		
(Inches)		HT	MS	S	HT	MS	S	HT	MS	S
1/4	6x19	0.49	0.51	0.55	0.37	0.38	0.41	0.99	1.0	1.1
5/16	6x19	0.76	0.79	0.85	0.57	0.59	0.64	1.5	1.6	1.7
3/8	6x19	1.1	1.1	1.2	0.80	0.85	0.91	2.1	2.2	2.4
7/16	6x19	1.4	1.5	1.6	1.1	1.1	1.2	2.9	3.0	3.3
1/2	6x19	1.8	2.0	2.1	1.4	1.5	1.6	3.7	3.9	4.3
9/16	6x19	2.3	2.5	2.7	1.7	1.9	2.0	4.6	5.0	5.4
5/8	6x19	2.8	3.1	3.3	2.1	2.3	2.5	5.6	6.2	6.7
3/4	6x19	3.9	4.4	4.8	2.9	3.3	3.6	7.8	8.8	9.5
7/8	6x19	5.1	5.9	6.4	3.9	4.5	4.8	10.0	12.0	13.0
1	6x19	6.7	7.7	8.4	5.0	5.8	6.3	13.0	15.0	17.0
1-1/8	6x19	8.4	9.5	10.0	6.3	7.1	7.9	17.0	19.0	21.0
1-1/4	6x37	9.8	11.0	12.0	7.4	8.3	9.2	20.0	22.0	25.0
1-3/8	6x37	12.0	13.0	15.0	8.9	10.0	11.0	24.0	27.0	30.0
1-1/2	6x37	14.0	16.0	17.0	10.0	12.0	13.0	28.0	32.0	35.0
1-5/8	6/37	16.0	18.0	21.0	12.0	14.0	15.0	33.0	37.0	41.0
1-3/4	6x37	19.0	21.0	24.0	14.0	16.0	18.0	38.0	43.0	48.0
2	6x37	25.0	28.0	31.0	18.0	21.0	23.0	49.0	55.0	62.0

HT = Hand tucked splice and hidden tuck splice.
For hidden tuck splice (IWRC) use value in HT column.
MS = Mechanical splice.
S = Swaged or zinc poured socket.
* = These values only apply when the D/d ratio for HT slings is 10 or greater, and for MS and S slings is 20 or greater where:
D = Diameter of curvature around which the body of the sling is bent.
d = Diameter of rope.

[Order 74-26, § 296-155-335 (part), Table F-3 (codified as WAC 296-155-34903), filed 5/7/74, effective 6/6/74.]

WAC 296-155-34904 Table F-4.

TABLE F-4
RATED CAPACITIES FOR SINGLE LEG SLING 6x19 and 6x37 CLASSIFICATION IMPROVED PLOW STEEL GRADE ROPE WITH INDEPENDENT WIRE ROPE CORE (IWRC)

Rope		Rated Capacities, Tons (2,000 lb)								
Dia.	Constr.	Vertical			Choker			Vertical Basket*		
(Inches)		HT	MS	S	HT	MS	S	HT	MS	S
1/4	6x19	0.53	0.56	0.59	0.40	0.42	0.44	1.0	1.1	1.2
5/16	6x19	0.81	0.87	0.92	0.61	0.65	0.69	1.6	1.7	1.8
3/8	6x19	1.1	1.2	1.3	0.86	0.93	0.98	2.3	2.5	2.6
7/16	6x19	1.5	1.7	1.8	1.2	1.3	1.3	3.1	3.4	3.5
1/2	6x19	2.0	2.2	2.3	1.5	1.6	1.7	3.9	4.4	4.6
9/16	6x19	2.5	2.7	2.9	1.8	2.1	2.2	4.9	5.5	5.8
5/8	6x19	3.0	3.4	3.6	2.2	2.5	2.7	6.0	6.8	7.2
3/4	6x19	4.2	4.9	5.1	3.1	3.6	3.8	8.4	9.7	10.0
7/8	6x19	5.5	6.6	6.9	4.1	4.9	5.2	11.0	13.0	14.0
1	6x19	7.2	8.5	9.0	5.4	6.4	6.7	14.0	17.0	18.0
1-1/8	6x19	9.0	10.0	11.0	6.8	7.8	8.5	18.0	21.0	23.0
1-1/4	6x37	10.0	12.0	13.0	7.9	9.2	9.9	21.0	24.0	26.0
1-3/8	6x37	13.0	15.0	16.0	9.6	11.0	12.0	25.0	29.0	32.0
1-1/2	6x37	15.0	17.0	19.0	11.0	13.0	14.0	30.0	35.0	38.0
1-5/8	6/37	18.0	20.0	22.0	13.0	15.0	17.0	35.0	41.0	44.0
1-3/4	6x37	20.0	24.0	26.0	15.0	18.0	19.0	41.0	47.0	51.0
2	6x37	26.0	30.0	33.0	20.0	23.0	25.0	53.0	61.0	66.0

HT = Hand tucked splice.
For hidden tuck splice (IWRC) use Table F3 values in HT column.
MS = Mechanical splice.
S = Swaged or zinc poured socket.
* = These values only apply when the D/d ratio for HT slings is 10 or greater, and for MS and S slings is 20 or greater where:
D = Diameter of curvature around which the body of the sling is bent.
d = Diameter of rope.
[Order 74-26, § 296-155-335 (part), Table F-4 (codified as WAC 296-155-34904), filed 5/7/74, effective 6/6/74.]

WAC 296-155-34905 Table F-5.

TABLE F-5
RATED CAPACITIES FOR SINGLE LEG SLINGS
CABLE LAND ROPE - MECHANICAL SPLICE ONLY
7x7x7 and 7x7x19 CONSTRUCTION GALVANIZED
AIRCRAFT GRADE ROPE 7x6x19 IWRC CONSTRUCTION
IMPROVED PLOW STEEL GRADE ROPE

Rope		Rated Capacities, Tons (2,000 lb)		
Dia. (Inches)	Constr.	Vertical	Choker	Vertical Basket*
1/4	7x7x7	0.50	0.38	1.0
3/8	7x7x7	1.1	0.81	2.2
1/2	7x7x7	1.8	1.4	3.7
5/8	7x7x7	2.8	2.1	5.5
3/4	7x7x7	3.8	2.9	7.6
5/8	7x7x19	2.9	2.2	5.8
3/4	7x7x19	4.1	3.0	8.1
7/8	7x7x19	5.4	4.0	11.0
1	7x7x19	6.9	5.1	14.0
1-1/8	7x7x19	8.2	6.2	16.0
1-1/4	7x7x19	9.9	7.4	20.0
3/4	7x6x19 IWRC	3.8	2.8	7.6
7/8	7x6x19 IWRC	5.0	3.8	10.0
1	7x6x19 IWRC	6.4	4.8	13.0
1-1/8	7x6x19 IWRC	7.7	5.8	15.0
1-1/4	7x6x19 IWRC	9.2	6.9	18.0
1-5/16	7x6x19 IWRC	10.0	7.5	20.0
1-3/8	7x6x19 IWRC	11.0	8.2	22.0
1-1/2	7x6x19 IWRC	13.0	9.6	26.0

* = These values only apply when the D/d ratio is 10 or greater where:
D = Diameter of curvature around which the body of the sling is bent.
d = Diameter of rope.

[Order 74-26, § 296-155-335 (part), Table F-5 (codified as WAC 296-155-34905), filed 5/7/74, effective 6/6/74.]

WAC 296-155-34906 Table F-6.

TABLE F-6
RATED CAPACITIES FOR SINGLE LEG SLINGS 8-PART AND 6-PART
BRAIDED ROPE 6x7 and 6x19 CONSTRUCTION
IMPROVED PLOW STEEL GRADE ROPE 7x7 CONSTRUCTION
GALVANIZED AIRCRAFT GRADE ROPE

Component Ropes		Rated Capacities, Tons (2,000) lb					
Diameter		Vertical		Choker		Vertical Basket to 30 degrees*	
(Inches)	Constr.	8-Part	6-Part	8-Part	6 -Part	8-Part	6-Part
3/32	6x7	0.42	0.32	0.32	0.24	0.74	0.55
1/8	6x7	0.76	0.57	0.57	0.42	1.3	0.98
3/16	6x7	1.7	1.3	1.3	0.94	2.9	2.2
3/32	7x7	0.51	0.39	0.38	0.29	0.89	0.67
1/8	7x7	0.95	0.71	0.71	0.53	1.6	1.2
3/16	7x7	2.1	1.5	1.5	1.2	3.6	2.7
3/16	6x19	1.7	1.3	1.3	0.98	3.0	2.2
1/4	6x19	3.1	2.3	2.3	1.7	5.3	4.0
5/16	6x19	4.8	3.6	3.6	2.7	8.3	6.2
3/8	6x19	6.8	5.1	5.1	3.8	12.0	8.9
7/16	6x19	9.3	6.9	6.9	5.2	16.0	12.0
1/2	6x19	12.0	9.0	9.0	6.7	21.0	15.0
9/16	6x19	15.0	11.0	11.0	8.5	26.0	20.0
5/8	6x19	19.0	14.0	14.0	10.0	32.0	24.0
3/4	6x19	27.0	20.0	20.0	15.0	46.0	35.0
7/8	6x19	36.0	27.0	27.0	20.0	62.0	47.0
1	6x19	47.0	35.0	35.0	26.0	81.0	61.0

* These values only apply when the D/d ratio is 20 or greater where:
D = Diameter of curvature around which the body of the sling is bent.
d = Diameter of component rope.
[Order 74-26, § 296-155-335 (part), Table F-6 (codified as WAC 296-155-34906), filed 5/7/74, effective 6/6/74.]

WAC 296-155-34907 Table F-7.

TABLE F-7
RATED CAPACITIES FOR 2-LEG and 3-LEG
BRIDLE SLINGS 6x19 AND 6x37 CLASSIFICATION
IMPROVED PLOW STEEL GRADE ROPE WITH FIBER CORE (FC)

TABLE F-7: PART 1-2-Leg Bridle Slings

Rope		Rated Capacities, Tons (2,000 lb) 2-Leg Bridle Slings					
Dia. (Inches)	Constr.	Vert 30 degree Horz 60 degree		45 degree Angle		Vert 60 degree Horz 30 degree	
		HT	MS	HT	MS	HT	MS
1/4	6x19	0.85	0.88	0.70	0.72	0.49	0.51
5/16	6x19	1.3	1.4	1.1	1.1	0.76	0.79
3/8	6x19	1.8	1.9	1.5	1.6	1.1	1.1
7/16	6x19	2.5	2.6	2.0	2.2	1.4	1.5
1/2	6x19	3.2	3.4	2.6	2.8	1.8	2.0
9/16	6x19	4.0	4.3	3.2	3.5	2.3	2.5
5/8	6x19	4.8	5.3	4.0	4.4	2.8	3.1
3/4	6x19	6.8	7.6	5.5	6.2	3.9	4.4
7/8	6x19	8.9	10.0	7.3	8.4	5.1	5.9
1	6x19	11.0	13.0	9.4	11.0	6.7	7.7
1-1/8	6x19	14.0	16.0	12.0	13.0	8.4	9.5
1-1/4	6x37	17.0	19.0	14.0	16.0	9.8	11.0
1-3/8	6x37	20.0	23.0	17.0	19.0	12.0	13.0
1-1/2	6x37	24.0	27.0	20.0	22.0	14.0	16.0
1-5/8	6x37	28.0	32.0	23.0	26.0	16.0	18.0
1-3/4	6x37	33.0	37.0	27.0	30.0	19.0	21.0
2	6x37	43.0	48.0	35.0	39.0	25.0	28.0

HT = Hand tucked splice.
MS = Mechanical splice.

WAC 296-155-34907 (Cont.) Table F-7.

TABLE F-7: PART 2-3-Leg Bridle Slings

Rope		Rated Capacities, Tons (2,000) lb 3-Leg Bridle Slings					
Dia. (Inches)	Constr.	Vert 30 degree Horz 60 degree		45 degree Angle		Vert 60 degree Horz 30 degree	
		HT	MS	HT	MS	HT	MS
1/4	6x19	0.85	0.88	0.70	0.72	0.49	0.51
5/16	6x19	1.3	1.4	1.1	1.1	0.76	0.79
3/8	6x19	1.8	1.9	1.5	1.6	1.1	1.1
7/16	6x19	2.5	2.6	2.0	2.2	1.4	1.5
1/2	6x19	3.2	3.4	2.6	2.8	1.8	2.0
9/16	6x19	4.0	4.3	3.2	3.5	2.3	2.5
5/8	6x19	4.8	5.3	4.0	4.4	2.8	3.1
3/4	6x19	6.8	7.6	5.5	6.2	3.9	4.4
7/8	6x19	8.9	10.0	7.3	8.4	5.1	5.9
1	6x19	11.0	13.0	9.4	11.0	6.7	7.7
1-1/8	6x19	14.0	16.0	12.0	13.0	8.4	9.5
1-1/4	6x37	17.0	19.0	14.0	16.0	9.8	11.0
1-3/8	6x37	20.0	23.0	17.0	19.0	12.0	13.0
1-1/2	6x37	24.0	27.0	20.0	22.0	14.0	16.0
1-5/8	6x37	28.0	32.0	23.0	26.0	16.0	18.0
1-3/4	6x37	33.0	37.0	27.0	30.0	19.0	21.0
2	6x37	43.0	48.0	35.0	39.0	25.0	28.0

HT = Hand tucked splice.
MS = Mechanical splice.
[Order 74-26, § 296-155-335 (part), Table F-7 (codified as WAC 296-155-34907), filed 5/7/74, effective 6/6/74.]

WAC 296-155-34908 Table F-8.

TABLE F-8
RATED CAPACITIES FOR 2-LEG and 3-LEG
BRIDLE SLINGS 6x19 AND 6x37 CLASSIFICATION
IMPROVED PLOW STEEL GRADE ROPE
WITH INDEPENDENT WIRE ROPE CORE (IWRC)

TABLE F-8: PART 1-2-Leg Bridle Slings

Rope		Rated Capacities, Tons (2,000 lb) 2-Leg Bridle Slings					
Dia. (Inches)	Constr.	Vert 30 degree Horz 60 degree		45 degree Angle		Vert 60 degree Horz 30 degree	
		HT	MS	HT	MS	HT	MS
1/4	6x19	0.92	0.97	0.75	0.79	0.53	0.56
5/16	6x19	1.4	1.5	1.1	1.2	1.81	0.87
3/8	6x19	2.0	2.1	1.6	1.8	1.1	1.2
7/16	6x19	2.7	2.9	2.2	2.4	1.5	1.7
1/2	6x19	3.4	3.8	2.8	3.1	2.0	2.2
9/16	6x19	4.3	4.8	3.5	3.9	2.5	2.7
5/8	6x19	5.2	5.9	4.2	4.8	3.0	3.4
3/4	6x19	7.3	8.4	5.9	6.9	4.2	4.9
7/8	6x19	9.6	11.0	7.8	9.3	5.5	6.6
1	6x19	12.0	15.0	10.0	12.0	7.2	8.5
1-1/8	6x19	16.0	18.0	13.0	15.0	9.0	10.0
1-1/4	6x37	18.0	21.0	15.0	17.0	10.0	12.0
1-3/8	6x37	22.0	25.0	18.0	21.0	13.0	15.0
1-1/2	6x37	26.0	30.0	21.0	25.0	15.0	17.0
1-5/8	6x37	31.0	35.0	25.0	29.0	18.0	20.0
1-3/4	6x37	35.0	41.0	29.0	33.0	20.0	24.0
2	6x37	46.0	53.0	37.0	43.0	26.0	30.0

HT = Hand tucked splice.
MS = Mechanical splice.

WAC 296-155-34908 (Cont.) Table F-8.

TABLE F-8: PART 2-3-Leg Bridle Slings

Rope		Rated Capacities, Tons (2,000 lb) 3-Leg Bridle Slings					
Dia. (Inches)	Constr.	Vert 30 degree Horz 60 degree		45 degree Angle		Vert 60 degree Horz 30 degree	
		HT	MS	HT	MS	HT	MS
1/4	6x19	1.4	1.4	1.1	1.2	0.79	0.84
5/16	6x19	2.1	2.3	1.7	1.8	1.2	1.3
3/8	6x19	3.0	3.2	2.4	2.6	1.7	1.9
7/16	6x19	4.0	4.4	3.3	3.6	2.3	2.5
1/2	6x19	5.1	5.7	4.2	4.6	3.0	3.3
9/16	6x19	6.4	7.1	5.2	5.8	3.7	4.1
5/8	6x19	7.8	8.8	6.4	7.2	4.5	5.1
3/4	6x19	11.0	13.0	8.9	10.0	6.3	7.3
7/8	6x19	14.0	17.0	12.0	14.0	8.3	9.9
1	6x19	19.0	22.0	15.0	18.0	11.0	13.0
1-1/8	6x19	23.0	27.0	19.0	22.0	13.0	16.0
1-1/4	6x37	27.0	32.0	22.0	26.0	16.0	18.0
1-3/8	6x37	33.0	38.0	27.0	31.0	19.0	22.0
1-1/2	6x37	39.0	45.0	32.0	37.0	23.0	26.0
1-5/8	6x37	46.0	53.0	38.0	43.0	27.0	31.0
1-3/4	6x37	53.0	61.0	43.0	50.0	31.0	35.0
2	6x37	68.0	79.0	56.0	65.0	40.0	46.0

HT = Hand tucked splice
MS = Mechanical splice
[Order 74-26, § 296-155-335 (part), Table F-8 (codified as WAC 296-155-34908), filed 5/7/74, effective 6/6/74.]

WAC 296-155-34909 Table F-9.

TABLE F-9
RATED CAPACITIES FOR 2-LEG and 3-LEG
BRIDLE SLINGS CABLE LAID ROPE -
MECHANICAL SPLICE ONLY 7x7x7 and
7x7x19 CONSTRUCTION GALVANIZED
AIRCRAFT GRADE ROPE 7x6x19 IWRC CONSTRUCTION
IMPROVED PLOW STEEL GRADE ROPE

TABLE F-9: PART 1-2 Leg Bridle Slings

Rope		Rated Capacities, Tons (2,000 lb) 2-Leg Bridle Slings		
Dia. (Inches)	**Constr.**	**Vert 30 degree Horz 60 degree**	**45 degree Angle**	**Vert 60 degree Horz 30 degree**
1/4	7x7x7	0.87	0.71	0.50
3/8	7x7x7	1.9	1.5	1.1
1/2	7x7x7	3.2	2.6	1.8
5/8	7x7x7	4.8	3.9	2.8
3/4	7x7x7	6.6	5.4	3.8
5/8	7x7x19	5.0	4.1	2.9
3/4	7x7x19	7.0	5.7	4.1
7/8	7x7x19	9.3	7.6	5.4
1	7x7x19	12.0	9.7	6.9
1-1/8	7x7x19	14.0	12.0	8.2
1-1/4	7x7x19	17.0	14.0	9.9
3/4	7x6x19 IWRC	6.6	5.4	3.8
7/8	7x6x19 IWRC	8.7	7.1	5.0
1	7x6x19 IWRC	11.0	9.0	6.4
1-1/8	7x6x19 IWRC	13.0	11.0	7.7
1-1/4	7x6x19 IWRC	16.0	13.0	9.2
1-5/16	7x6x19 IWRC	17.0	14.0	10.0
1-3/8	7x6x19 IWRC	19.0	15.0	11.0
1-1/2	7x6x19 IWRC	22.0	18.0	13.0

WAC 296-155-34909 (Cont.) Table F-9.

TABLE F-9: PART 2-3-Leg Bridle Slings

Rope		Rated Capacities, Tons (2,000 lb) 3-Leg Bridle Slings		
Dia. (Inches)	**Constr.**	**Vert 30 degree Horz 60 degree**	**45 degree Angle**	**Vert 60 degree Horz 30 degree**
1/8	7x7x7	0.87	0.71	0.50
1/4	7x7x7	1.3	1.1	0.75
3/8	7x7x7	2.8	2.3	1.6
1/2	7x7x7	4.8	3.9	2.8
5/8	7x7x7	7.2	5.9	4.2
3/4	7x7x7	9.9	8.1	5.7
5/8	7x7x19	7.5	6.1	4.3
3/4	7x7x19	10.0	8.6	6.1
7/8	7x7x19	14.0	11.0	8.1
1	7x7x19	18.0	14.0	10.0
1-1/8	7x7x19	21.0	17.0	12.0
1-1/4	7x7x19	26.0	21.0	15.0
3/4	7x6x19 IWRC	9.9	8.0	5.7
7/8	7x6x19 IWRC	13.0	11.0	7.5
1	7x6x19 IWRC	17.0	13.0	9.6
1-1/8	7x6x19 IWRC	20.0	16.0	11.0
1-1/4	7x6x19 IWRC	24.0	20.0	14.0
1-5/16	7x6x19 IWRC	26.0	21.0	15.0
1-3/8	7x6x19 IWRC	28.0	23.0	16.0
1-1/2	7x6x19 IWRC	33.0	27.0	19.0

[Order 74-26, § 296-155-335 (part), Table F-9 (codified as WAC 296-155-34909), filed 5/7/74, effective 6/6/74.]

WAC 296-155-34910 Table F-10.

TABLE F-10
RATED CAPACITIES FOR 2-LEG and 3-LEG BRIDLE SLINGS 8-PART and 6-PART BRAIDED ROPE 6x7 and 6x19 CONSTRUCTION IMPROVED PLOW STEEL GRADE ROPE 7x7 CONSTRUCTION GALVANIZED AIRCRAFT GRADE ROPE

TABLE F-10: PART 1-2-Leg Bridle Slings

Component Rope		Rated Capacities, Tons (2,000) lb 2-Leg Bridle Slings					
Diameter		Vert 30 degree Horz 60 degree		45 degree Angle		Vert 60 degree Horz 30 degree	
(Inches)	Constr.	8-Part	6-Part	8-Part	6 -Part	8-Part	6-Part
3/32	6x7	0.74	0.55	0.60	0.45	0.42	0.32
1/8	6x7	1.3	0.98	1.1	0.80	0.76	0.57
3/16	6x7	2.9	2.2	2.4	1.8	1.7	1.3
3/32	7x7	0.89	0.67	0.72	0.55	0.51	0.39
1/8	7x7	1.6	1.2	1.3	1.0	0.95	0.71
3/16	7x7	3.6	2.7	2.9	2.2	2.1	1.5
3/16	6x19	3.0	2.2	2.4	1.8	1.7	1.3
1/4	6x19	5.3	4.0	4.3	3.2	3.1	2.3
5/16	6x19	8.3	6.2	6.7	5.0	4.8	3.6
3/8	6x19	12.0	8.9	9.7	7.2	6.8	5.1
7/16	6x19	16.0	12.0	13.0	9.8	9.3	6.9
1/2	6x19	21.0	15.0	17.0	13.0	12.0	9.0
9/16	6x19	26.0	20.0	21.0	16.0	15.0	11.0
5/8	6x19	32.0	24.0	26.0	20.0	19.0	14.0
3/4	6x19	46.0	35.0	38.0	28.0	27.0	20.0
7/8	6x19	62.0	47.0	51.0	38.0	36.0	27.0
1	6x19	81.0	61.0	66.0	50.0	47.0	35.0

WAC 296-155-34910 (Cont.) Table F-10.

TABLE F-10: PART 2-3-LEG BRIDLE SLINGS

Component Rope		Rated Capacities, Tons (2,000) lb 3-Leg Bridle Slings					
Diameter		Vert 30 degree Horz 60 degree		45 degree Angle		Vert 60 degree Horz 30 degree	
(Inches)	Constr.	8-Part	6-Part	8-Part	6 -Part	8-Part	6-Part
1/16	6x7	0.74	0.55	0.60	0.45	0.42	0.32
3/32	6x7	1.1	0.83	0.90	0.68	0.64	0.48
1/8	6x7	2.0	1.5	1.6	1.2	1.1	0.85
3/16	6x7	4.4	3.3	3.6	2.7	2.5	1.9
3/32	7x7	1.3	1.0	1.1	0.82	0.77	0.58
1/8	7x7	2.5	1.8	2.0	1.5	1.4	1.1
3/16	7x7	5.4	4.0	4.4	3.3	3.1	2.3
3/16	6x19	4.5	3.4	3.7	2.8	2.6	1.9
1/4	6x19	8.0	6.0	6.5	4.9	4.6	3.4
5/16	6x19	12.0	9.3	10.0	7.6	7.1	5.4
3/8	6x19	18.0	13.0	14.0	11.0	10.0	7.7
7/16	6x19	24.0	18.0	20.0	15.0	14.0	10.0
1/2	6x19	31.0	23.0	25.0	19.0	18.0	13.0
9/16	6x19	39.0	29.0	32.0	24.0	23.0	17.0
5/8	6x19	48.0	36.0	40.0	30.0	28.0	21.0
3/4	6x19	69.0	52.0	56.0	42.0	40.0	30.0
7/8	6x19	94.0	70.0	76.0	57.0	54.0	40.0
1	6x19	122.0	91.0	99.0	74.0	70.0	53.0

[Order 74-26, § 296-155-335 (part), Table F-10 (codified as WAC 296-155-34910), filed 5/7/74, effective 6/6/74.]

WAC 296-155-34911 Table F-11.

TABLE F-11
RATED CAPACITIES FOR STRAND LAID GROMMET-HAND TUCKED IMPROVED PLOW STEEL GRADE ROPE

Rope Body		Rated capacities, Tons (2,000 lb)		
Dia. (inches)	Constr.	Vertical	Choker	Vertical Basket*
1/4	7x19	0.85	0.64	1.7
5/16	7x19	1.3	1.0	2.6
3/8	7x19	1.9	1.4	3.8
7/16	7x19	2.6	1.9	5.2
1/2	7x19	3.3	2.5	6.7
9/16	7x19	4.2	3.1	8.4
5/8	7x19	5.2	3.9	10.0
3/4	7x19	7.4	5.6	15.0
7/8	7x19	10.0	7.5	20.0
1	7x19	13.0	9.7	26.0
1-1/8	7x19	16.0	12.0	32.0
1-1/4	7x37	18.0	14.0	37.0
1-3/8	7x37	22.0	16.0	44.0
1-1/2	7x37	26.0	19.0	52.0

* These values only apply when the D/d ratio is 5 or greater where:
D = Diameter of curvature around which rope is bent.
d = Diameter of rope body.

[Statutory Authority: RCW 49.17.040 and 49.17.050. 86-03-074 (Order 86-14), § 296-155-34911, filed 1/21/86; Order 74-26, § 296-155-335 (part), Table F-11 (codified as WAC 296-155-34911), filed 5/7/74, effective 6/6/74.]

WAC 296-155-34912 Table F-12.

TABLE F-12
RATED CAPACITIES FOR CABLE LAID GROMMET-
HAND TUCKED 7x6x7 and 7x6x19 CONSTRUCTION
IMPROVED PLOW STEEL GRADE ROPE 7x7x7
CONSTRUCTION GALVANIZED AIRCRAFT GRADE ROPE

Cable Body		Rated capacities, Tons (2,000 lb)		
Dia. (inches)	Constr.	Vertical	Choker	Vertical Basket*
3/8	7x6x7	1.3	0.95	2.5
9/16	7x6x7	2.8	2.1	5.6
5/8	7x6x7	3.8	2.8	7.6
3/8	7x7x7	1.6	1.2	3.2
9/16	7x7x7	3.5	2.6	6.9
5/8	7x7x7	4.5	3.4	9.0
5/8	7x6x19	3.9	3.0	7.9
3/4	7x6x19	5.1	3.8	10.0
15/16	7x6x19	7.9	5.9	16.0
1-1/8	7x6x19	11.0	8.4	22.0
1-5/16	7x6x19	15.0	11.0	30.0
1 1/2	7x6x19	19.0	14.0	39.0
1-11/16	7x6x19	24.0	18.0	49.0
1-7/8	7x6x19	30.0	22.0	60.0
2-1/4	7x6x19	42.0	31.0	84.0
2-5/8	7x6x19	56.0	42.0	112.0

* These values only apply when the D/d ratio is 5 or greater where:
D = Diameter of curvature around which cable body is bent.
d = Diameter of cable body.

[Statutory Authority: RCW 49.17.040 and 49.17.050. 86-03-074 (Order 86-14), § 296-155-34912, filed 1/21/86; Order 74-26, § 296-155-335 (part), Table F-12 (codified as WAC 296-155-34912), filed 5/7/74, effective 6/6/74.]

WAC 296-155-34913 Table F-13.

TABLE F-13
RATED CAPACITIES FOR STRAND LAID ENDLESS SLINGS-
MECHANICAL JOINT IMPROVED PLOW STEEL GRADE ROPE

Rope Body		Rated capacities, Tons (2,000 lb)		
Dia. (inches)	Constr.	Vertical	Choker	Vertical Basket*
1/4	6x19 IWRC	0.92	0.69	1.8
3/8	6x19 IWRC	2.0	1.5	4.1
1/2	6x19 IWRC	3.6	2.7	7.2
5/8	6x19 IWRC	5.6	4.2	11.0
3/4	6x19 IWRC	8.0	6.0	16.0
7/8	6x19 IWRC	11.0	8.1	21.0
1	6x19 IWRC	14.0	10.0	28.0
1-1/8	6x19 IWRC	18.0	13.0	35.0
1-1/4	6x37 IWRC	21.0	15.0	41.0
1-3/8	6x37 IWRC	25.0	19.0	50.0
1-1/2	6x37 IWRC	29.0	22.0	59.0

* These values only apply when the D/d ratio is 5 or greater where:
D = Diameter of curvature around which rope is bent.
d = Diameter of rope body.

[Statutory Authority: RCW 49.17.040 and 49.17.050. 86-03-074 (Order 86-14), § 296-155-34913, filed 1/21/86; Order 74-26, § 296-155-335 (part), Table F-13 (codified as WAC 296-155-34913), filed 5/7/74, effective 6/6/74.]

WAC 296-155-34914 Table F-14.

TABLE F-14
RATED CAPACITIES FOR CABLE LAID ENDLESS SLINGS-MECHANICAL JOINT 7 x 7 x 7 AND 7 x 7 x 19 CONSTRUCTION GALVANIZED AIRCRAFT GRADE ROPE 7 x 6 x 19 IWRC CONSTRUCTION IMPROVED PLOW STEEL GRADE ROPE

Cable Body		Rated capacities, Tons (2,000 lb)		
Dia. (inches)	Constr.	Vertical	Choker	Vertical Basket*
1/4	7x7x7	0.83	0.62	1.6
3/8	7x7x7	1.8	1.3	3.5
1/2	7x7x7	3.0	2.3	6.1
5/8	7x7x7	4.5	3.4	9.1
3/4	7x7x7	6.3	4.7	12.0
5/8	7x7x19	4.7	3.5	9.5
3/4	7x7x19	6.7	5.0	13.0
7/8	7x7x19	8.9	6.6	18.0
1	7x7x19	11.0	8.5	22.0
1-1/8	7x7x19	14.0	10.0	28.0
1-1/4	7x7x19	17.0	12.0	33.0
3/4	7x6x19 IWRC	6.2	4.7	12.0
7/8	7x6x19 IWRC	8.3	6.2	16.0
1	7x6x19 IWRC	10.0	7.9	21.0
1-1/8	7x6x19 IWRC	13.0	9.7	26.0
1-1/4	7x6x19 IWRC	16.0	12.0	31.0
1-3/8	7x6x19 IWRC	18.0	14.0	37.0
1-1/2	7x6x19 IWRC	22.0	16.0	43.0

* These values only apply when the D/d value is 5 or greater where:
D = Diameter of curvature around which cable body is bent.
d = Diameter of cable body.

[Statutory Authority: RCW 49.17.040 and 49.17.050. 86-03-074 (Order 86-14), § 296-155-34914, filed 1/21/86; Order 74-26, § 296-155-335 (part), Table F-14 (codified as WAC 296-155-34914), filed 5/7/74, effective 6/6/74.]

WAC 296-155-34915 Table F-15.

TABLE F-15
MANILA ROPE SLINGS
TABLE F-15: PART 1-Eye and Eye Sling

			Rated Capacity in Pounds (Safety Factor = 5) Eye and Eye Sling Basket Hitch					
					Angle of Rope to Horizontal			
Rope Diameter Nominal in Inches	Nominal Weight per 100 ft in Pounds	Minimum Breaking Strength in Pounds			90 deg	30 deg	45 deg	30 deg
			Vertical Hitch	Choker Hitch	Angle of Rope to Vertical 0 deg	30 deg	45 deg	60 deg
1/2	7.5	2,650	550	250	1,100	900	750	550
9/16	10.4	3,450	700	350	1,400	1,200	1,000	700
5/8	13.3	4,400	900	450	1,800	1,500	1,200	900
3/4	16.7	5,400	1,100	550	2,200	1,900	1,500	1,100
13/16	19.5	6,500	1,300	650	2,600	2,300	1,800	1,300
7/8	22.5	7,700	1,500	750	3,100	2,700	2,200	1,500
1	27.0	9,000	1,800	900	3,600	3,100	2,600	1,800
1-1/16	31.3	10,500	2,100	1,100	4,200	3,600	3,000	2,100
1-1/8	36.0	12,000	2,400	1,200	4,800	4,200	3,400	2,400
1-1/4	41.7	13,500	2,700	1,400	5,400	4,700	3,800	2,700
1-5/16	47.9	15,000	3,000	1,500	6,000	5,200	4,300	3,000
1-1/2	59.9	18,500	3,700	1,850	7,400	6,400	5,200	3,700
1-5/8	74.6	22,500	4,500	2,300	9,000	7,800	6,400	4,500
1-3/4	89.3	26,500	5,300	2,700	10,500	9,200	7,500	5,300
2	107.5	31,000	6,200	3,100	12,500	10,500	8,800	6,200
2-1/8	125.0	36,000	7,200	3,600	14,500	12,500	10,000	7,200
2-1/4	146.0	41,000	8,200	4,100	16,500	14,000	11,500	8,200
2-1/2	166.7	46,500	9,300	4,700	18,500	16,000	13,000	9,300
2-5/8	190.8	52,000	10,500	5,200	21,000	18,000	14,500	10,500

WAC 296-155-34915 (Cont.) Table F-15: PART 2-Endless Sling

			Rated Capacity in Pounds (Safety Factor = 5) Endless Sling Basket Hitch					
					Angle of Rope to Horizontal			
Rope Diameter Nominal in Inches	Nominal Weight per 100 ft in Pounds	Minimum Breaking Strength in Pounds			90 deg	30 deg	45 deg	30 deg
			Vertical Hitch	Choker Hitch	Angle of Rope to Vertical 0 deg	30 deg	45 deg	60 deg
1/2	7.5	2,650	950	500	1,900	1,700	1,400	950
9/16	10.4	3,450	1,200	600	2,500	2,200	1,800	1,200
5/8	13.3	4,400	1,600	800	3,200	2,700	2,200	1,600
3/4	16.7	5,400	2,000	950	3,900	3,400	2,800	2,000
13/16	19.5	6,500	2,300	1,200	4,700	4,100	3,300	2,300
7/8	22.5	7,700	2,800	1,400	5,600	4,800	3,900	2,800
1	27.0	9,000	3,200	1,600	6,500	5,600	4,600	3,200
1-1/16	31.3	10,500	3,800	1,900	7,600	6,600	5,400	3,800
1-1/8	36.0	12,000	4,300	2,200	8,600	7,500	6,100	4,300
1-1/4	41.7	13,500	4,900	2,400	9,700	8,400	6,900	4,900
1-5/16	47.9	15,000	5,400	2,700	11,000	9,400	7,700	5,400
1-1/2	59.9	18,500	6,700	3,300	13,500	11,500	9,400	6,700
1-5/8	74.6	22,500	8,100	4,100	16,000	14,000	11,500	8,000
1-3/4	89.3	26,500	9,500	4,800	19,000	16,500	13,500	9,500
2	107.5	31,000	11,000	5,600	22,500	19,500	16,000	11,000
2-1/8	125.0	36,000	13,000	6,500	26,000	22,500	18,500	13,000
2-1/4	146.0	41,000	15,000	7,400	29,500	25,500	21,000	15,000
2-1/2	166.7	46,500	16,500	8,400	33,500	29,000	23,500	16,500
2-5/8	190.8	52,000	18,500	9,500	37,500	32,500	26,500	18,500

[Order 74-26, § 296-155-335 (part), Table F-15 (codified as WAC 296-155-34915), filed 5/7/74, effective 6/6/74.]

WAC 296-155-34916 Table F-16.

TABLE F-16
NYLON ROPE SLINGS
TABLE F-16: PART 1-Eye and Eye Sling

			Rated Capacity in Pounds (Safety Factor = 9) Eye and Eye Sling Basket Hitch					
					Angle of Rope to Horizontal			
Rope Diameter Nominal in Inches	Nominal Weight per 100 ft in Pounds	Minimum Breaking Strength in Pounds	Vertical Hitch	Choker Hitch	90 deg	30 deg	45 deg	30 deg
					Angle of Rope to Vertical			
					0 deg	30 deg	45 deg	60 deg
1/2	6.5	6,080	700	350	1,400	1,200	950	700
9/16	8.3	7,600	850	400	1,700	1,500	1,200	850
5/8	10.5	9,880	1,100	550	2,200	1,900	1,600	1,100
3/4	14.5	13,490	1,500	750	3,000	2,600	2,100	1,500
13/16	17.0	16,150	1,800	900	3,600	3,100	2,600	1,800
7/8	20.0	19,000	2,100	1,100	4,200	3,700	3,000	2,100
1	26.0	23,750	2,600	1,300	5,300	4,600	3,700	2,600
1-1/16	29.0	27,360	3,000	1,500	6,100	5,300	4,300	3,000
1-1/8	34.0	31,350	3,500	1,700	7,000	6,000	5,000	3,500
1-1/4	40.0	35,625	4,000	2,000	7,900	6,900	5,600	4,000
1-5/16	45.0	40,850	4,500	2,300	9,100	7,900	6,400	4,500
1-1/2	55.0	50,350	5,600	2,800	11,000	9,700	7,900	5,600
1-5/8	68.0	61,750	6,900	3,400	13,500	12,000	9,700	6,900
1-3/4	83.0	74,100	8,200	4,100	16,500	14,500	11,500	8,200
2	95.0	87,400	9,700	4,900	19,500	17,000	13,500	9,700
2-1/8	109.0	100,700	11,000	5,600	22,500	19,500	16,000	11,000
2-1/4	129.0	118,750	13,000	6,600	26,500	23,000	18,500	13,000
2-1/2	149.0	133,000	15,000	7,400	29,500	25,500	21,000	15,000
2-5/8	168.0	153,900	17,100	8,600	34,000	29,500	24,000	17,000

WAC 296-155-34916 (Cont.) Table F-16: PART 2-Endless Sling

			Rated Capacity in Pounds (Safety Factor = 9) Endless Sling Basket Hitch					
					Angle of Rope to Horizontal			
Rope Diameter Nominal in Inches	Nominal Weight per 100 ft in Pounds	Minimum Breaking Strength in Pounds			90 deg	30 deg	45 deg	30 deg
			Vertical Hitch	Choker Hitch	Angle of Rope to Vertical 0 deg	30 deg	45 deg	60 deg
1/2	6.5	6,080	1,200	600	2,400	2,100	1,700	1,200
9/16	8.3	7,600	1,500	750	3,000	2,600	2,200	1,500
5/8	10.5	9,880	2,000	1,000	4,000	3,400	2,800	2,000
3/4	14.5	13,490	2,700	1,400	5,400	4,700	3,800	2,700
13/16	17.0	16,150	3,200	1,600	6,400	5,600	4,600	3,200
7/8	20.0	19,000	3,800	1,900	7,600	6,600	5,400	3,800
1	26.0	23,750	4,800	2,400	9,500	8,200	6,700	4,800
1-1/16	29.0	27,360	5,500	2,700	11,000	9,500	7,700	5,500
1-1/8	34.0	31,350	6,300	3,100	12,500	11,000	8,900	6,300
1-1/4	40.0	35,625	7,100	3,600	14,500	12,500	10,000	7,100
1-5/16	45.0	40,850	8,200	4,100	16,500	14,000	12,000	8,200
1-1/2	55.0	50,350	10,000	5,000	20,000	17,500	14,000	10,000
1-5/8	68.0	61,750	12,500	6,200	24,500	21,500	17,500	12,500
1-3/4	83.0	74,100	15,000	7,400	29,500	27,500	21,000	15,000
2	95.0	87,400	17,500	8,700	35,000	30,500	24,500	17,500
2-1/8	109.0	100,700	20,000	10,000	40,500	35,000	28,500	20,000
2-1/4	129.0	118,750	24,000	12,000	47,500	41,000	33,500	24,000
2-1/2	149.0	133,000	26,500	13,500	53,000	46,000	37,500	26,500
2-5/8	168.0	153,900	31,000	15,500	61,500	53,500	43,500	31,000

[Order 74-26, § 296-155-335 (part), Table F-16 (codified as WAC 296-155-34916), filed 5/7/74, effective 6/6/74.]

WAC 296-155-34917 Table F-17.

TABLE F-17
POLYESTER ROPE SLINGS
TABLE F-17: PART 1-Eye and Eye Sling

			Rated Capacity in Pounds (Safety Factor = 9) Eye and Eye Sling Basket Hitch					
					Angle of Rope to Horizontal			
Rope Diameter Nominal in Inches	Nominal Weight per 100 ft in Pounds	Minimum Breaking Strength in Pounds			90 deg	30 deg	45 deg	30 deg
			Vertical Hitch	Choker Hitch	Angle of Rope to Vertical 0 deg	30 deg	45 deg	60 deg
1/2	8.0	6,080	700	350	1,400	1,200	950	700
9/16	10.2	7,600	850	400	1,700	1,500	1,200	850
5/8	13.0	9,500	1,100	550	2,100	1,800	1,500	1,100
3/4	17.5	11,875	1,300	650	2,600	2,300	1,900	1,300
13/16	21.0	14,725	1,600	800	3,300	2,800	2,300	1,600
7/8	25.0	17,100	1,900	950	3,800	3,300	2,700	1,900
1	30.5	20,900	2,300	1,200	4,600	4,000	3,300	2,300
1-1/16	34.5	24,225	2,700	1,300	5,400	4,700	3,800	2,700
1-1/8	40.0	28,025	3,100	1,600	6,200	5,400	4,400	3,100
1-1/4	46.3	31,540	3,500	1,800	7,000	6,100	5,000	3,500
1-5/16	52.5	35,625	4,000	2,000	7,900	6,900	5,600	4,000
1-1/2	66.8	44,460	4,900	2,500	9,900	8,600	7,000	4,900
1-5/8	82.0	54,150	6,000	3,000	12,000	10,400	8,500	6,000
1-3/4	98.0	64,410	7,200	3,600	14,500	12,500	10,000	7,200
2	118.0	76,000	8,400	4,200	17,000	14,500	12,000	8,400
2-1/8	135.0	87,400	9,700	4,900	19,500	17,000	13,500	9,700
2-1/4	157.0	101,650	11,500	5,700	22,500	19,500	16,000	11,500
2-1/2	181.0	115,900	13,000	6,400	26,000	22,500	18,000	13,000
2-5/8	205.0	130,150	14,500	7,200	29,000	25,000	20,500	14,500

WAC 296-155-34917 (Cont.) Table F-17: PART 2-Endless Sling

			Rated Capacity in Pounds (Safety Factor = 9) Endless Sling Basket Hitch					
					Angle of Rope to Horizontal			
Rope Diameter Nominal in Inches	Nominal Weight per 100 ft in Pounds	Minimum Breaking Strength in Pounds			90 deg	30 deg	45 deg	30 deg
			Vertical Hitch	Choker Hitch	Angle of Rope to Vertical 0 deg	30 deg	45 deg	60 deg
1/2	8.0	6,080	1,200	600	2,400	2,100	1,700	1,200
9/16	10.2	7,600	1,500	750	3,000	2,600	2,200	1,500
5/8	13.0	9,500	1,900	950	3,800	3,300	2,700	1,900
3/4	17.5	11,875	2,400	1,200	4,800	4,100	3,400	2,400
13/16	21.0	14,725	2,900	1,500	5,900	5,100	4,200	2,900
7/8	25.0	17,100	3,400	1,700	6,800	5,900	4,800	3,400
1	30.5	20,900	4,200	2,100	8,400	7,200	5,900	4,200
1-1/16	34.5	24,225	4,800	2,400	9,700	8,400	6,900	4,800
1-1/8	40.0	28,025	5,600	2,800	11,000	9,700	7,900	5,600
1-1/4	46.3	31,540	6,300	3,200	12,500	11,000	8,900	6,300
1-5/16	52.5	35,625	7,100	3,600	14,500	12,500	10,000	7,100
1-1/2	66.8	44,460	8,900	4,400	18,000	15,500	12,500	8,900
1-5/8	82.0	54,150	11,000	5,400	21,500	19,000	15,500	11,000
1-3/4	98.0	64,410	13,000	6,400	26,000	22,500	18,000	13,000
2	118.0	76,000	15,000	7,600	30,500	26,500	21,500	15,000
2-1/8	135.0	87,400	17,500	8,700	35,000	30,500	24,500	17,500
2-1/4	157.0	101,650	20,500	10,000	40,500	35,000	29,000	20,500
2-1/2	181.0	115,900	23,000	11,500	46,500	40,000	33,000	23,000
2-5/8	205.0	130,150	26,000	13,000	52,000	45,000	37,000	26,000

[Order 74-26, § 296-155-335 (part), Table F-17 (codified as WAC 296-155-34917), filed 5/7/74, effective 6/6/74.]

WAC 296-155-34918 Table F-18.

TABLE F-18
POLYPROPYLENE ROPE SLINGS
TABLE F-18: PART 1-Eye and Eye Sling

			Rated Capacity in Pounds (Safety Factor = 6) Eye and Eye Sling Basket Hitch					
					Angle of Rope to Horizontal			
Rope Diameter Nominal in Inches	Nominal Weight per 100 ft in Pounds	Minimum Breaking Strength in Pounds			90 deg	30 deg	45 deg	30 deg
			Vertical Hitch	Choker Hitch	Angle of Rope to Vertical 0 deg	30 deg	45 deg	60 deg
1/2	4.7	3,990	650	350	1,300	1,200	950	650
9/16	6.1	4,845	800	400	1,600	1,400	1,100	800
5/8	7.5	5,890	1,000	500	2,000	1,700	1,400	1,000
3/4	10.7	8,075	1,300	700	2,700	2,300	1,900	1,300
13/16	12.7	9,405	1,600	800	3,100	2,700	2,200	1,600
7/8	15.0	10,925	1,800	900	3,600	3,200	2,600	1,800
1	18.0	13,300	2,200	1,100	4,400	3,800	3,100	2,200
1-1/16	20.4	15,200	2,500	1,300	5,100	4,400	3,600	2,500
1-1/8	23.7	17,385	2,900	1,500	5,800	5,000	4,100	2,900
1-1/4	27.0	19,950	3,300	1,700	6,700	5,800	4,700	3,300
1-5/16	30.5	22,325	3,700	1,900	7,400	6,400	5,300	3,700
1-1/2	38.5	28,215	4,700	2,400	9,400	8,100	6,700	4,700
1-5/8	47.5	34,200	5,700	2,900	11,500	9,900	8,100	5,700
1-3/4	57.0	40,850	6,800	3,400	13,500	12,000	9,600	6,800
2	69.0	49,400	8,200	4,100	16,500	14,500	11,500	8,200
2-1/8	80.0	57,950	9,700	4,800	19,500	16,500	13,500	9,700
2-1/4	92.0	65,550	11,000	5,500	22,000	19,000	15,500	11,000
2-1/2	107.0	76,000	12,500	6,300	25,500	22,000	18,000	12,500
2-5/8	120.0	85,500	14,500	7,100	28,500	24,500	20,000	14,500

WAC 296-155-34918 (Cont.) Table F-18: PART 2-Endless Sling

			Rated Capacity in Pounds (Safety Factor = 6) Endless Sling Basket Hitch					
					Angle of Rope to Horizontal			
Rope Diameter Nominal in Inches	Nominal Weight per 100 ft in Pounds	Minimum Breaking Strength in Pounds			90 deg	30 deg	45 deg	30 deg
			Vertical Hitch	Choker Hitch	Angle of Rope to Vertical			
					0 deg	30 deg	45 deg	60 deg
1/2	4.7	3,990	1,200	600	2,400	2,100	1,700	1,200
9/16	6.1	4,845	1,500	750	2,900	2,500	2,100	1,500
5/8	7.5	5,890	1,800	900	3,500	3,100	2,500	1,800
3/4	10.7	8,075	2,400	1,200	4,900	4,200	3,400	2,400
13/16	12.7	9,405	2,800	1,400	5,600	4,900	4,000	2,800
7/8	15.0	10,925	3,300	1,600	6,600	5,700	4,600	3,300
1	18.0	13,300	4,000	2,000	8,000	6,900	5,600	4,000
1-1/16	20.4	15,200	4,600	2,300	9,100	7,900	6,500	4,600
1-1/8	23.7	17,385	5,200	2,600	10,500	9,000	7,400	5,200
1-1/4	27.0	19,950	6,000	3,000	12,000	10,500	8,500	6,000
1-5/16	30.5	22,325	6,700	3,400	13,500	11,500	9,500	6,700
1-1/2	38.5	28,215	8,500	4,200	17,000	14,500	12,000	8,500
1-5/8	47.5	34,200	10,500	5,100	20,500	18,000	14,500	10,500
1-3/4	57.0	40,850	12,500	6,100	24,500	21,000	17,500	12,500
2	69.0	49,400	15,000	7,400	29,500	25,500	21,000	15,000
2-1/8	80.0	57,950	17,500	8,700	35,000	30,500	24,500	17,500
2-1/4	92.0	65,550	19,500	9,900	39,500	34,000	28,000	19,500
2-1/2	107.0	76,000	23,000	11,500	45,500	39,500	32,500	23,000
2-5/8	120.0	85,500	25,500	13,000	51,500	44,500	36,500	25,500

[Order 74-26, § 296-155-335 (part), Table F-18 (codified as WAC 296-155-34918), filed 5/7/74, effective 6/6/74.]

WAC 296-155-34919 Table F-19.

TABLE F-19
SAFE WORKING LOADS FOR SHACKLES
(in tons of 2,000 pounds)

Material size (inches)	Pin diameter (inches)	Safe working load
1/2	5/8	1.4
5/8	3/4	2.2
3/4	7/8	3.2
7/8	1	4.3
1	1-1/8	5.6
1-1/8	1-1/4	6.7
1-1/4	1-3/8	8.2
1-3/8	1-1/2	10.0
1-1/2	1-5/8	11.9
1-3/4	2	16.2
2	2-1/4	21.2

[Order 74-26, § 296-155-335 (part), Table F-19 (codified as WAC 296-155-34919), filed 5/7/74, effective 6/6/74.]

WAC 296-155-34920 Table F-20.

TABLE F-20
NUMBER AND SPACING OF U-BOLT
WIRE ROPE CLIPS

Improved plow steel	Number of clips ---------- Drop forged	Minimum spacing (inches)
3/8 and under	2	3
1/2	3	3
5/8	3	3
3/4	4	4-1/2
7/8	4	5-1/4
1	5	6
1-/18	6	7
1-1/4	6	8
1-3/8	7	9
1/1/2	7	10

[Statutory Authority: Chapter 49.17 RCW. 94-15-096 (Order 94-07), § 296-155-34920, filed 7/20/94, effective 9/20/94. Statutory Authority: RCW 49.17.040 and 49.17.050. 86-03-074 (Order 86-14), § 296-155-34920, filed 1/21/86; Order 74-26, § 296-155-335 (part), Table F-20 (codified as WAC 296-155-34920), filed 5/7/74, effective 6/6/74.]

PART G
TOOLS-HAND AND POWER

WAC 296-155-350 General requirements.

(1) Condition of tools. All hand and power tools and similar equipment, whether furnished by the employer or the employee, shall be maintained in a safe condition.

(2) Guarding.

(a) When power operated tools are designed to accommodate guards, they shall be equipped with such guards when in use.

(b) Belts, gears, shafts, pulleys, sprockets, spindles, drums, fly wheels, chains, or other reciprocating, rotating or moving parts of equipment shall be guarded if such parts are exposed to contact by employees or otherwise create a hazard. Guarding shall meet the requirements as set forth in American National Standards Institute, B15.1-1953 (R1958), Safety Code for Mechanical Power-Transmission Apparatus.

(3) Personal protective equipment. Employees using hand and power tools and exposed to the hazard of falling, flying, abrasive, and splashing objects, or exposed to harmful dusts, fumes, mists, vapors, or gases shall use the particular personal protective equipment necessary to protect them from the hazard. All personal protective equipment shall meet the requirements and be maintained according to Parts B and C of this chapter.

(4) Switches.

(a) Scope. This subsection does not apply to concrete vibrators, concrete breakers, powered tampers, jack hammers, rock drills, and similar hand operated power tools.

(b) All hand-held powered platen sanders, grinders with wheels 2-inch diameter or less, routers, planers, laminate trimmers, nibblers, shears, scroll saws, and jigsaws with blade shanks one-fourth of an inch wide or less may be equipped with only a positive “on-off” control.

(c) All hand-held powered drills, tappers, fastener drivers, horizontal, vertical, and angle grinders with wheels greater than 2 inches in diameter, disc sanders, belt sanders, reciprocating saws, saber saws, and other similar operating powered tools shall be equipped with a momentary contact “on-off” control and may have a lock-on control provided that turn-off can be accomplished by a single motion of the same finger or fingers that turn it on.

(d) All other hand-held powered tools, such as circular saws, chain saws, and percussion tools, shall be equipped with a constant pressure switch that will shut off the power when the pressure is released.

(e) Disconnect switches. All fixed power driven tools shall be provided with a disconnect switch that can either be locked or tagged in the off position.

(f) Self-feed. Automatic feeding devices shall be installed on machines whenever the nature of the work will permit. Feeder attachments shall have the feed rolls or other moving parts covered or guarded so as to protect the operator from hazardous points.

[Order 74-26, § 296-155-350, filed 5/7/74, effective 6/6/74.]

WAC 296-155-355 Hand tools.

(1) Employers shall not issue or permit the use of unsafe hand tools.

(2) Wrenches, including adjustable, pipe, end, and socket wrenches shall not be used when jaws are sprung or worn to the point that slippage occurs.

(3) Nails shall not be cut with an axe.

(4) Impact tools, such as drift pins, wedges, and chisels, shall be kept free of mushroomed heads.

(5) The wooden handles of tools shall be kept free of splinters or cracks and shall be kept tight in the tool.

[Statutory Authority: RCW 49.17.040 and 49.17.050. 86-03-074 (Order 86-14), § 296-155-355, filed 1/21/86; Order 74-26, § 296-155-355, filed 5/7/74, effective 6/6/74.]

WAC 296-155-360 Power-operated hand tools.

(1) Electric power-operated tools.

(a) Electric power operated tools shall either be of the approved double-insulated type or grounded in accordance with Part I of this chapter.

(b) The use of electric cords for hoisting or lowering tools shall not be permitted.

(2) Pneumatic power tools.

(a) Pneumatic power tools and hose sections shall be secured by threaded couplings, quick disconnect couplings or by 100 pound tensile strength safety chain or equivalent across each connection to prevent the tool or hose connections from becoming accidentally disconnected.

(b) Safety clips or retainers shall be securely installed and maintained on pneumatic impact (percussion) tools to prevent attachments from being accidentally expelled.

(c) All pneumatically driven nailers, staplers, and other similar equipment provided with automatic fastener feed, shall have a safety device on the muzzle to prevent the tool from ejecting fasteners, unless the muzzle is in contact with the work surface.

Exception: *Pneumatic nailers or staplers utilizing "fine wire" brads or staples do not require a muzzle contact safety device, provided:*

(1) The overall weight of the fastening device does not exceed the weight of standard 18 gauge wire, 1-1/2 inches long.

(2) The operator and any other person within 12 feet of the point of operation wear approved eye protection.

Note: The normal maximum diameter tolerance for manufacturing standard 18 gauge wire is .045 inches.

(d) Compressed air shall not be used at the nozzle for cleaning purposes except where reduced to less than 30 p.s.i. and then only with effective chip guarding and personal protective equipment which meets the requirements of Part C of this chapter.

WAC 296-155-360 (Cont.)

Note: The above requirement does not apply to concrete form, mill scale and similar cleaning purposes. Concrete form, mill scale, and similar cleaning may be performed with air pressure exceeding 30 p.s.i. provided the nozzle and/or cleaning pipe is at least three feet long with a quick-closing (deadman) valve between the hose and the nozzle or pipe. The operator and all other employees within range of flying debris shall be protected by eye or face protection as specified in WAC 296-155-215.

(e) The manufacturer's safe operating pressure for hoses, pipes, valves, filters, and other fittings shall not be exceeded.

(f) The use of hoses for hoisting or lowering tools shall not be permitted.

(g) All hoses exceeding 1/2-inch inside diameter shall have a safety device at the source of supply or branch line to reduce pressure in case of hose failure.

(h) Airless spray guns of the type which atomize paints and fluids at high pressures (1,000 pounds or more per square inch) shall be equipped with automatic or visible manual safety devices which will prevent pulling of the trigger to prevent release of the paint or fluid until the safety device is manually released.

(i) In lieu of the above, a diffuser nut which will prevent high pressure, high velocity release, while the nozzle tip is removed, plus a nozzle tip guard which will prevent the tip from coming into contact with the operator, or other equivalent protection, shall be provided.

(j) Abrasive blast cleaning nozzles. The blast cleaning nozzles shall be equipped with an operating valve which must be held open manually. A support shall be provided on which the nozzle may be mounted when it is not in use.

(3) Fuel powered tools.

(a) All fuel powered tools shall be stopped while being refueled, serviced, or maintained, and fuel shall be transported, handled, and stored in accordance with Part D of this chapter.

(b) When fuel powered tools are used in enclosed spaces, the applicable requirements for concentrations of toxic gases and use of personal protective equipment as outlined in Parts B and C of this chapter shall apply.

(4) Hydraulic power tools.

(a) The fluid used in hydraulic powered tools shall be fire resistant fluid approved under schedule 30 of the Bureau of Mines, U.S. Department of the Interior, and shall retain its operating characteristics at the most extreme temperatures to which it will be exposed.

(b) The manufacturer's safe operating pressures for hoses, valves, pipes, filters, and other fittings shall not be exceeded.

[Statutory Authority: Chapter 49.17 RCW. 94-15-096 (Order 94-07), § 296-155-360, filed 7/20/94, effective 9/20/94. Statutory Authority: RCW 49.17.040 and 49.17.050. 86-03-074 (Order 86-14), § 296-155-360, filed 1/21/86; Order 76-29, § 296-155-360, filed 9/30/76; Order 76-6, § 296-155-360, filed 3/1/76; Order 74-26, § 296-155-360, filed 5/7/74, effective 6/6/74.]

WAC 296-155-363 Safety requirements for powder actuated fastening systems, in accordance with ANSI A10.3-1985, Safety Requirements for Powder Actuated Fastening Systems.

[Statutory Authority: Chapter 49.17 RCW. 91-11-070 (Order 91-01), § 296-155-363, filed 5/20/91, effective 6/20/91. Statutory Authority: RCW 49.17.040 and 49.17.050. 86-03-074 (Order 86-14), § 296-155-363, filed 1/21/86.]

WAC 296-155-36301 Scope. This standard provides safety requirements for a powder actuated fastening tool or machine which propels a stud, pin, fastener, or other object for the purpose of affixing it by penetration to another object.

This standard does not apply to devices designed for attaching objects to soft construction materials, such as wood, plaster, tar, dry wallboard, and the like, or to stud welding equipment.
[Statutory Authority: RCW 49.17.040 and 49.17.050. 86-03-074 (Order 86-14), § 296-155-36301, filed 1/21/86.]

WAC 296-155-36303 Purpose. The purpose of this standard is to provide reasonable safety for life, limb, and property, by establishing requirements for design, construction, operation, service, and storage of powder actuated fastening tools, fasteners and power loads.
[Statutory Authority: RCW 49.17.040 and 49.17.050. 86-03-074 (Order 86-14), § 296-155-36303, filed 1/21/86.]

WAC 296-155-36305 Definitions applicable to this section.

(1) **Angle control** - a safety feature designed to prevent a tool from operating when tilted beyond a predetermined angle.

(2) **Approved** - meeting the requirements of this standard and acceptable to the department of labor and industries.

(3) **Cased power load** - a power load with the propellant contained in a closed case.

(4) **Caseless power load** - a power load with the propellant in solid form not requiring containment.

(5) **Chamber** (noun) -the location in the tool into which the power load is placed and in which it is actuated.

(6) **Chamber** (verb) -to fit the chamber according to manufacturer's specifications.

(7) **Fasteners** - any pins (unthreaded heads) or studs (threaded heads) driven by powder actuated tools.

(8) **Fixture** - a special shield that provides equivalent protection where the standard shield cannot be used.

(9) **Head** - that portion of a fastener that extends above the work surface after being properly driven.

(10) **Misfire** - a condition in which the power load fails to ignite after the tool has been operated.

(11) **Powder actuated fastening system** - a method comprising the use of a powder actuated tool, a power load, and a fastener.

(12) **Powder actuated tool** (also known as tool) -a tool that utilizes the expanding gases from a power load to drive a fastener.

(13) **Power load** - the energy source used in powder actuated tools.

(14) **Qualified operator** - a person who meets the requirements of WAC 296-155-36321 (1) and (2).

(15) **Shield** - a device, attached to the muzzle end of a tool, which is designed to confine flying particles.

(16) **Spalled area** - a damaged and nonuniform concrete or masonry surface.

WAC 296-155-36305 (Cont.)

(17) **Test velocity** - the measurement of fastener velocity performed in accordance with WAC 296-155-36307 (1)(m).

(18) **Tools** - tools can be divided into two types: Direct acting and indirect acting; and three classes: Low velocity, medium velocity, and high velocity.

(a) **Direct acting tool** a tool in which the expanding gas of the power load acts directly on the fastener to be driven.

(b) **Indirect acting tool** - a tool in which the expanding gas of the power load acts on a captive piston, which in turn drives the fastener.

(c) **Low-velocity tool** - a tool whose test velocity has been measured ten times while utilizing the highest velocity combination of:

(i) The lightest commercially available fastener designed for that specific tool;

(ii) The strongest commercially available power load that will properly chamber in the tool;

(iii) The piston designed for that tool and appropriate for that fastener; that will produce an average test velocity from the ten tests not in excess of 100 meters per second (328 feet per second) with no single test having a velocity of over 108 m/s (354 ft/s).

(d) **Medium-velocity tool** - a tool whose test velocity has been measured ten times while utilizing the highest velocity combination of:

(i) The lightest commercially available fastener designed for the tool;

(ii) The strongest commercially available power load that will properly chamber in the tool;

(iii) The piston designed for that tool and appropriate for that fastener; that will produce an average test velocity from ten tests in excess of 100 m/s (328 ft/s) but not in excess of 150 m/s (492 ft/s) with no single test having a velocity of 160 m/s (525 ft/s).

(e) **High-velocity tool** - a tool whose test velocity has been measured ten times while utilizing the combination of:

(i) The lightest commercially available fastener designed for the tool;

(ii) The strongest commercially available power load which will properly chamber in the tool; that will produce an average velocity from the ten tests in excess of 150 m/s (492 ft/s).

[Statutory Authority: Chapter 49.17 RCW. 94-15-096 (Order 94-07), § 296-155-36305, filed 7/20/94, effective 9/20/94. Statutory Authority: RCW 49.17.040 and 49.17.050. 86-03-074 (Order 86-14), § 296-155-36305, filed 1/21/86.]

WAC 296-155-36307 Requirements.

(1) General.

(a) The tool shall be designed to prevent inadvertent actuation.

WAC 296-155-36307 (Cont.)

(b) The tool shall be designed to prevent actuation when dropped in any attitude from a height of 3 meters (10 ft) onto a smooth, hard surface such as concrete or steel, if such actuation can propel a fastener or any part thereof in free flight.

(c) Actuation of the tool shall be dependent upon at least two separate and distinct operations by the operator, with at least one operation being separate from the operation of holding the tool against the work surface.

(d) The tool shall be designed not to be operable other than against a work surface with a force on the work surface equal to 22 newtons (5 lb) greater than the weight of the tool or a minimum impact energy of 4 joules (3 ft-lb).

(e) All tools shall be designed so that compatible protective shields or fixtures, designed, built, and supplied by the manufacturer of the tool, can be used (see WAC 296-155-36307 (2)(b), (3)(b), (4)(b) and 296-155-36313(8)).

(f) The tool shall be designed so that a determinable means of varying the power levels is available for selecting a power level adequate to perform the desired work (see WAC 296-155-36309(5)).

(g) The tool shall be designed so that all principal functional parts can be checked for foreign matter that may affect operation.

(h) The tool shall be designed so that all parts will be of adequate strength to resist maximum stresses imposed upon actuation when the tool is used in accordance with the manufacturer's instructions and is powered by any commercially available power load which will properly chamber in the tool.

(i) Each tool shall bear a legible permanent model designation, which shall serve as a means of identification. Each tool shall also bear a legible, permanent manufacturer's unique serial number.

(j) A lockable container shall be provided for each tool. The words "POWDER ACTUATED TOOL" shall appear in plain sight on the outside of the container. The following notice shall be attached on the inside cover of the container:

"WARNING - POWDER ACTUATED TOOL. TO BE USED ONLY BY A QUALIFIED OPERATOR AND KEPT UNDER LOCK AND KEY WHEN NOT IN USE."

(k) Each tool shall bear a durable warning label with the following statement, or the equivalent:

"WARNING - FOR USE ONLY BY QUALIFIED OPERATORS ACCORDING TO MANUFACTURER'S INSTRUCTION MANUAL."

(l) Each tool shall be supplied with the following:

(i) Operator's instruction and service manual.

(ii) Power load chart.

(iii) Tool inspection record.

(iv) Service tools and accessories.

WAC 296-155-36307 (Cont.)

(m) In determining tool test velocities, the velocity of the fastener shall be measured in free flight at a distance of 2 meters (6-1/2 ft) from the muzzle end of the tool, using accepted ballistic test methods.

(2) Design requirements - low-velocity class.

(a) Low-velocity tools, indirect-acting (piston) type, as defined in WAC 296-155-36305, shall meet the requirements of WAC 296-155-36307(1).

(b) A shield shall be supplied with each tool.

(3) Design requirements - medium-velocity class.

(a) Medium-velocity tools, indirect-acting (piston) type, as defined in WAC 296-155-36305, shall meet the requirements of WAC 296-155-36307(1).

(b) The tool shall have a shield at least 63 mm (2-1/2 in) in diameter mounted perpendicular to, and concentric with, the muzzle end, when it is indexed to the center position. A special shield or fixture may be used when it provides equivalent protection.

(c) The tool shall be designed so that it cannot be actuated unless it is equipped with a shield or fixture.

(d) The tool shall be designed with angle control so that it will not actuate when equipped with the standard shield indexed to the center position if the bearing surface of the shield is tilted more than 12 degrees from a flat surface.

(4) Design requirements - high-velocity class.

(a) High-velocity tools, direct-acting or indirect-acting type, as defined in WAC 296-155-36305, shall meet the requirements of WAC 296-155-36307(1).

(b) The tool shall have a shield at least 88 mm (3-1/2 in) in diameter mounted perpendicular to, and concentric with, the muzzle end, when it is indexed to the center position. A special shield or fixture may be used when it provides equivalent protection.

(c) The tool shall be designed so that it cannot be actuated unless it is equipped with a shield or fixture.

(d) The tool shall be designed with angle control so that it will not actuate when equipped with the standard shield indexed to the center position, if the bearing surface of the shield is tilted more than eight degrees from a flat surface.

[Statutory Authority: RCW 49.17.040 and 49.17.050. 86-03-074 (Order 86-14), § 296-155-36307, filed 1/21/86.]

WAC 296-155-36309 Power loads.

(1) Identification of cased power loads. Cased power loads shall be coded to identify power load levels by case color and power load color as specified in Table G-1.

(2) Identification of caseless power loads. Caseless power loads shall be coded to identify power load levels by power load color as specified in Table G-1 and by configuration.

WAC 296-155-36309 (Cont.)

(3) Power load use limitation. No power load (cased or caseless) shall be used if it will properly chamber in any existing commercially available tool and will cause a fastener to have a test velocity in excess of the maximum test velocities specified for the said tool.

(4) Identification of power load packages. Power load packages shall provide a visual number-color indication of the power level of the power load as specified in Table G-1.

TABLE G-1
Power Load Identification

Power Level	Color Identification		Nominal Velocity	
	Case Color	Load Color	Meters per Second (± 13.5)	Feet per Second (± 45)
1	Brass	Gray	91	300
2	Brass	Brown	119	390
3	Brass	Green	146	480
4	Brass	Yellow	174	570
5	Brass	Red	201	660
6	Brass	Purple	229	750
7	Nickel	Gray	256	840
8	Nickel	Brown	283	930
9	Nickel	Green	311	1020
10	Nickel	Yellow	338	1110
11	Nickel	Red	366	1200
12	Nickel	Purple	393	1290

Note: The nominal velocity applies to a 9.53 mm (3/8-in) diameter 22.7-gram (350-grain) ballistic slug fired in a test device and has no reference to actual fastener velocity developed in any specific tool.

(5) Optional power load variation. Where means other than power loads of varying power levels are to be used to control penetration, such means shall provide an equivalent power level variation.
[Statutory Authority: RCW 49.17.040 and 49.17.050. 86-03-074 (Order 86-14), § 296-155-36309, filed 1/21/86.]

WAC 296-155-36311 Fasteners. Fasteners for use in power actuated tools shall be designed and manufactured to function compatibly with these tools and, when used in masonry, concrete, or steel, to effect properly the application for which they are recommended.
[Statutory Authority: RCW 49.17.040 and 49.17.050. 86-03-074 (Order 86-14), § 296-155-36311, filed 1/21/86.]

WAC 296-155-36313 Operation.

(1) Acceptable tools. Only tools meeting the requirements of this standard shall be used.

(2) Qualified operators. Only qualified operators shall operate tools.

(3) Use lowest velocity. The lowest velocity class of tool that will properly set the fastener shall be used.

(4) Operating limitations. Tools shall be operated in strict accordance with the manufacture's instructions.

(5) Personal protection. Eye or face protection, or both, shall be worn by operators, assistants, and adjacent personnel when tool is in use. Hearing protection shall be used when making fastenings in confined areas.

WAC 296-155-36313 (Cont.)

(6) Daily inspections. Each day, prior to use, the operator shall inspect the tool to determine that it is in proper working condition in accordance with the testing methods recommended by the manufacture of the tool.

(7) Defective tools. Any tool found not to be in proper working condition shall be immediately removed from service and tagged "DEFECTIVE"; it shall not be used until it has been properly repaired in accordance with the manufacture's instructions.

(8) Proper accessories. The proper shield, fixture, adapter, or accessory, suited for the application, as recommended and supplied by the manufacture, shall be used.

(9) Proper loads and fasteners. Only those types of fasteners and power loads recommended by the tool manufacture for a particular tool, or those providing the same level of safety and performance, shall be used.

(10) Questionable material. Before fastening into any questionable material, the operator shall determine its suitability by using a fastener as a center punch. If the fastener point does not easily penetrate, is not blunted, and does not fracture the material, initial test fastenings shall then be made in accordance with the tool manufacture's recommendations. (See WAC 296-155-36315(3).)

(11) Tool safety. No tool shall be loaded unless it is being prepared for immediate use. If the work is interrupted after loading, the tool shall be unloaded at once.

(12) Powder actuated magazine or clip-fed tools are not considered loaded unless a power load is actually in the ram (firing chamber), even though the magazine or clip is inserted in the tool. If work is interrupted, the firing chamber shall be cleared and the magazine or clip removed.

(13) Pointing tools. Tools shall not be loaded until just prior to the intended firing time. Neither loaded nor empty tools are to be pointed at any person; hands shall be kept clear of the open barrel end.

(14) Tool perpendicular to work. The tool shall always be held perpendicular to the work surface when fastening into any material, except for specific applications recommended by the tool manufacture.

(15) Misfires. In the event of a misfire, the operator shall hold the tool firmly against the work surface for a period of thirty seconds and then follow the explicit instructions set forth in the manufacture's instructions.

(16) Different power levels. Power loads of different power levels and types shall be kept in separate compartments or containers.

(17) Signs. A sign, at least 20 x 25 cm (8 x 10 in), using boldface type no less than 2.5 cm (1 in) in height, shall be posted in plain sight on all construction projects where tools are used. The sign shall bear wording similar to the following: "POWER ACTUATED TOOL IN USE."

[Statutory Authority: Chapter 49.17 RCW. 91-11-070 (Order 91-01), § 296-155-36313, filed 5/20/91, effective 6/20/91; 89-11-035 (Order 89-03), § 296-155-36313, filed 5/15/89, effective 6/30/89. Statutory Authority: RCW 49.17.040 and 49.17.050. 86-03-074 (Order 86-14), § 296-155-36313, filed 1/21/86.]

WAC 296-155-36315 Limitations of use.

(1) Explosive and flammable atmospheres. The tool shall not be used in an explosive or flammable atmosphere.

(2) Unattended tools prohibited. A tool shall never be left unattended in a place where it would be available to unauthorized persons.

WAC 296-155-36315 (Cont.)

(3) Fasteners in hard, brittle areas. Fasteners shall not be driven into very hard or brittle materials including, but not limited to, cast iron, glazed tile, hardened steel, glass block, natural rock, hollow tile, or most brick. (See WAC 296-155-36313(10).)

(4) Fasteners in soft materials. Fasteners shall not be driven into easily penetrated or thin materials, or materials of questionable resistance, unless backed by a material that will prevent the fastener from passing completely through the other side.

(5) Fasteners in steel. Fasteners shall not be driven closer than 13 mm (1/2 in) from the edge of steel except for specific applications recommended by the tool manufacturer.

(6) Fasteners in masonry. Fasteners shall not be driven closer than 7.5 cm (3 in) from the unsupported edge of masonry materials except for specific applications recommended by the tool manufacturer.

(7) Fasteners in concrete. Fasteners shall not be driven into concrete unless material thickness is at least three times the fastener shank penetration.

(8) Fasteners in spalls. Fasteners shall not be driven into any spalled area.

(9) Fasteners in existing holes. Fasteners shall not be driven through existing holes unless a specific guide means, as recommended and supplied by the tool manufacturer, is used to ensure positive alignment.

[Statutory Authority: RCW 49.17.040 and 49.17.050. 86-03-074 (Order 86-14), § 296-155-36315, filed 1/21/86.]

WAC 296-155-36317 Maintenance and storage.

(1) Use of tools. The tool shall be serviced and inspected for worn or damaged parts at regular intervals as recommended by the tool manufacturer. Prior to the tool being put back into use, all worn or damaged parts shall be replaced by a qualified person using only parts supplied by the tool manufacturer. A record of this inspection shall be noted and dated on the tool inspection record.

(2) Instruction manuals. Instruction manuals, maintenance tools, and accessories supplied with the tool shall be stored in the tool container when not in use.

(3) Security. Powder actuated tools and power loads shall be locked in a container and stored in a safe place when not in use and shall be accessible only to authorized personnel.

[Statutory Authority: RCW 49.17.040 and 49.17.050. 86-03-074 (Order 86-14), § 296-155-36317, filed 1/21/86.]

WAC 296-155-36319 Authorized instructor.

(1) Operator qualifications. Only persons trained and authorized by the tool manufacturer or by an authorized representative of the tool manufacturer shall be qualified to instruct and qualify operators for the manufacturer's powder actuated tools.

(2) Instructor qualifications. All authorized instructors shall have read and be familiar with this standard, and shall be capable of:

(a) Disassembling, servicing, and reassembling the tool.

(b) Recognizing any worn or damaged parts or defective operation.

WAC 296-155-36319 (Cont.)

(c) Recognizing and clearly identifying the colors used to identify power load levels.

(d) Using the tool correctly within the limitations of its use.

(e) Training and testing operators prior to issuing a qualified operator's card.

(3) Instructor's card. All authorized instructors shall have in their possession a valid authorized instructor's card issued and signed by an authorized representative of the manufacturer. The card shall be wallet size of approximately 6 x 9 cm (2-1/2 x 3-1/2 in), and the face of the card shall bear text similar to that shown in Figure G-1.

(4) List of instructors. A list of all instructors authorized by the manufacturer to instruct and qualify operators shall be maintained by the tool manufacturer and be made available to the department of labor and industries.

(5) Revocation of instructor card. Instructor's card may be revoked by the authorizing agent or the department of labor and industries, if the instructor is known to have issued a qualified operator's card in violation of any regulation contained in this standard. When an instructor is no longer authorized to issue qualified operator's cards, cards shall be surrendered to the authorizing agent or the department of labor and industries.

AUTHORIZED INSTRUCTOR

_____ Powder Actuated Tools Date_____
(MAKE)

Card No. _____ Social Security No. _____

This certifies that_____
(NAME OF INSTRUCTOR)

has received the prescribed training in the operation and maintenance of powder actuated tools manufactured by
_____
(NAME OF MANUFACTURER)

and is qualified to train and certify operators of _____ powder actuated tools.
(MAKE)

Model(s)_____

Authorized by _____

I have received instruction by the manufacturer's authorized representative in the training of operators of the above tools and agree to conform to all rules and regulations governing the instruction of tool operators.

Date of Birth _____

_____
(SIGNATURE)

Figure G-1

Sample of Authorized Instructor's Card

[Statutory Authority: Chapter 49.17 RCW. 94-15-096 (Order 94-07), § 296-155-36319, filed 7/20/94, effective 9/20/94. Statutory Authority: RCW 49.17.040 and 49.17.050. 86-03-074 (Order 86-14), § 296-155-36319, filed 1/21/86.]

WAC 296-155-36321 Qualified operator.

(1) Operator qualifications. The operator shall be trained by an authorized instructor to be familiar with the provisions of this standard and the instructions provided by the manufacturer for operation and maintenance. The operator shall also be capable of:

(a) Reading and understanding the manufacturer's instruction manual.

(b) Cleaning the tool correctly.

WAC 296-155-36321 (Cont.)

(c) Recognizing any worn or damaged parts or defective operation.

(d) Recognizing the number-color code system used in this standard to identify power load levels. In the event the operator is unable to distinguish the colors used, the operator shall be given special instruction which will enable the operator to avoid error.

(e) Using a tool correctly within the limitations of its use and demonstrate competence by operating the tool in the presence of the instructor.

(2) Operator examination. After training, the operator shall substantiate competency by completing satisfactorily a written examination provided by the manufacturer of the tool.

(a) The operator's written examination shall consist of questions to establish the operator's competence with respect to:

(i) The requirements of this standard;

(ii) The powder actuated fastening system; and

(iii) The specific details of operation and maintenance of the tool(s) involved.

(b) The examination shall provide a statement, attested to by the instructor, that the applicant can (or cannot) readily distinguish the colors used to identify power load levels (see WAC 296-155-36309).

(3) Operator's card. Each applicant who meets the requirements as set forth in subsections (1) and (2) of this section shall receive a qualified operator's card, issued and signed by both the instructor and applicant. While using the tool, the operator shall carry this card.

(4) Card features. The qualified operator's card supplied by the manufacturer shall be wallet size of approximately 6 x 9 cm (2-1/2 x 3-1/2 in), and the face of the card shall bear text similar to that shown in Figure G-2.

(5) Revocation notation. There shall be printed on the card a notation reading:

“Revocation of card - Failure to comply with any of the rules and regulations for safe operation of powder actuated fastening tools shall be cause for the immediate revocation of this card.”

WAC 296-155-36321 (Cont.)

QUALIFIED OPERATOR

_____ Powder Actuated Tools Date_____
(MAKE)
Card No. _____ Social Security No. _____
This certifies that_____
(NAME OF OPERATOR)
has received the prescribed training in the operation of powder actuated tools manufactured by
_____
(NAME OF MANUFACTURER)
Model(s)_____
Trained and issued by:_____
(SIGNATURE OF AUTHORIZED INSTRUCTOR)

I have received instruction in the safe operation and maintenance of powder actuated fastening tools of the makes and models specified and agree to conform to all rules and regulations governing that use.
Date of Birth _____

_____
(SIGNATURE)

Figure G-2
Sample of Qualified Operator's Card

[Statutory Authority: Chapter 49.17 RCW. 94-15-096 (Order 94-07), § 296-155-36321, filed 7/20/94, effective 9/20/94. Statutory Authority: RCW 49.17.040 and 49.17.050. 86-03-074 (Order 86-14), § 296-155-36321, filed 1/21/86.]

WAC 296-155-365 Abrasive wheels and tools.

(1) Power. All grinding machines shall be supplied with sufficient power to maintain the spindle speed at safe levels under all conditions of normal operation.

(2) Guarding.

(a) Grinding machines shall be equipped with safety guards in conformance with the requirements of American National Standards Institute, B7.1-1978, Safety Code for the Use, Care and Protection of Abrasive Wheels.

(b) Guard design. The safety guard shall cover the spindle end, nut, and flange projections. The safety guard shall be mounted so as to maintain proper alignment with the wheel, and the strength of the fastenings shall exceed the strength of the guard, except:

(i) Safety guards on all operations where the work provides a suitable measure of protection to the operator, may be so constructed that the spindle end, nut, and outer flange are exposed; and where the nature of the work is such as to entirely cover the side of the wheel, the side covers of the guard may be omitted; and

(ii) The spindle end, nut, and outer flange may be exposed on machines designed as portable saws.

(3) Use of abrasive wheels.

(a) Floor stand and bench mounted abrasive wheels, used for external grinding, shall be provided with safety guards (protection hoods). The maximum angular exposure of the grinding wheel

WAC 296-155-365 (Cont.)

periphery and sides shall be not more than 90°, except that when work requires contact with the wheel below the horizontal plane of the spindle, the angular exposure shall not exceed 125°. In either case, the exposure shall begin not more than 65° above the horizontal plane of the spindle. Safety guards shall be strong enough to withstand the effect of a bursting wheel.

(b) Floor and bench-mounted grinders shall be provided with work rests which are rigidly supported and readily adjustable. Such work rests shall be adjusted to a distance not to exceed one-eighth inch from the surface of the wheel. The work rest may be omitted when contacts of the work piece with the grinding surface below the horizontal plane of the spindle are necessary and unavoidable, or where the size or shape of the work piece precludes use of the work rest.

(c) Cup type wheels used for external grinding shall be protected by either a revolving cup guard or a band type guard in accordance with the provisions of the American National Standards Institute, B7.1-1978, Safety Requirements for the Use, Care, and Protection of Abrasive Wheels. Abrasive wheels shall only be used on machines provided with safety guards, except the following:

(i) Wheels used for internal work while within the work being ground.

(ii) Mounted wheels, 2 inches and smaller in diameter used in portable operations.

(iii) Types 16, 17, 18, 18R and 19 cones and plugs, and threaded hole pot balls where the work offers protection or where the size does not exceed 3 inches in diameter by 5 inches in length.

(iv) Metal centered diamond lapidary wheels either notched, segmented or continuous rim used with a coolant deflector, when operated at speeds up to 3500 surface feet per minute (S.F.P.M.).

(v) Type 1 wheels not larger than 2 inches in diameter and not more than 1/2 inch thick, operating at peripheral speeds less than 1800 SFPM when mounted on mandrels driven by portable drills.

(vi) Type 1 reinforced wheels not more than 3 inches in diameter and 1/4 inch in thickness, operating at peripheral speeds not exceeding 9500 SFPM, provided that safety glasses and face shield are worn.

(vii) Valve seat grinding wheels.

(d) Portable abrasive wheels used for internal grinding shall be provided with safety flanges (protection flanges) meeting the requirements of subdivision (f) of this subsection, except as follows:

(i) When wheels 2 inches or less in diameter which are securely mounted on the end of a steel mandrel are used;

(ii) If the wheel is entirely within the work being ground while in use.

(e) When safety guards are required, they shall be so mounted as to maintain proper alignment with the wheel, and the guard and its fastenings shall be of sufficient strength to retain fragments of the wheel in case of accidental breakage. The maximum angular exposure of the grinding wheel periphery and sides shall not exceed 180°.

WAC 296-155-365 (Cont.)

(f) When safety flanges are required, they shall be used only with wheels designed to fit the flanges. Only safety flanges, of a type and design and properly assembled so as to ensure that the pieces of the wheel will be retained in case of accidental breakage, shall be used.

(g) All abrasive wheels shall be closely inspected and ring-tested before mounting to ensure that they are free from cracks or defects.

(h) Grinding wheels shall fit freely on the spindle and shall not be forced on. The spindle nut shall be tightened only enough to hold the wheel in place.

(i) All employees using abrasive wheels shall be protected by eye protection equipment in accordance with the requirements of Part C of this chapter, except when adequate eye protection is afforded by eye shields which are permanently attached to the bench or floor stand.

(4) Other requirements. All abrasive wheels and tools used by employees shall meet other applicable requirements of American National Standards Institute, B7.1-1978, Safety Code for the Use, Care and Protection of Abrasive Wheels.

[Statutory Authority: Chapter 49.17 RCW. 94-15-096 (Order 94-07), § 296-155-365, filed 7/20/94, effective 9/20/94. Statutory Authority: RCW 49.17.040 and 49.17.050. 86-03-074 (Order 86-14), § 296-155-365, filed 1/21/86; Order 74-26, § 296-155-365, filed 5/7/74, effective 6/6/74.]

WAC 296-155-367 Masonry saws.

(1) Guarding.

(a) Masonry saws shall be guarded by semicircular enclosures over the blade.

(b) A method for retaining blade fragments shall be incorporated into the design of the semicircular enclosure.

(2) Safety latch. A safety latch shall be installed on notched saws to prevent the motor and cutting head assembly from lifting out of the notches.

(3) Blade speed. Blade speed shall be maintained in accordance with the manufacturer's specifications.

(4) Exhaust and eye protection.

(a) All table mounted masonry saws shall be equipped with a mechanical means of exhausting dust into a covered receptacle or be provided with water on the saw blade for dust control. The operator and any nearby worker shall wear appropriate eye protection in accordance with WAC 296-155-215.

(b) All portable hand-held masonry saw operators shall wear appropriate eye and respiratory protection in accordance with WAC 296-155-215 and chapter 296-62 WAC, Part E.

(5) Grounding. The motor frames of all stationary saws shall be grounded through conduit, water pipe, or a driven ground. Portable saws shall be grounded through three-pole cords attached to grounded electrical systems.

(6) Inspection. Masonry saws shall be inspected at regular intervals and maintained in safe operating condition.

[Statutory Authority: RCW 49.17.010, .040, .050. 99-10 (Order 98-10), § 296-155-367, filed 05/04/99, effective 09/01/99. Statutory Authority: Chapter 49.17 RCW. 90-17-051 (Order 90-10), § 296-155-367, filed 8/13/90, effective 9/24/90. Statutory Authority: RCW 49.17.040 and 49.17.050. 86-03-074 (Order 86-14), § 296-155-367, filed 1/21/86.]

WAC 296-155-370 Woodworking tools.

(1) Speeds. No saw shall be operated in excess of the manufacturers recommended speed.

(2) Guarding. All portable, hand held power-driven circular saws shall be equipped with guards above and below the base plate or shoe. The upper guard shall cover the saw to the depth of the teeth, except for the minimum arc required to permit the base to be tilted for bevel cuts. The lower guard shall cover the saw to the depth of the teeth, except for the minimum arc required to allow proper retraction and contact with the work. When the tool is withdrawn from the work, the lower guard shall automatically and instantly return to the covering position.

(3) Hand-fed table saws.

(a) Each circular hand-fed table saw shall be provided with a hood-type guard that will cover the blade at all times when the blade is not in use. This may be accomplished by the use of a guard that will automatically adjust to the thickness of the material being cut, or by a fixed or manually adjusted guard. If a fixed or manually adjusted guard is used, the space between the bottom of the guard and the material being cut shall not exceed 3/8 inch if 1-1/2 inches or more from the blade, and 1/4 inch if closer than 1-1/2 inches.

(b) When the blade is in use, the hood-type guard shall enclose that portion of the blade above the material.

(c) Hood-type guards shall be so designed and constructed as to resist blows and strains incidental to reasonable operation, adjusting, and handling, in order to protect the operator from flying splinters and broken saw teeth.

(d) The hood shall be so mounted as to ensure that its operation will be positive, reliable, and in alignment with the saw. The mounting shall be adequate to resist any reasonable side thrust or other force that would disrupt alignment.

(e) Where a hood-type guard cannot be used because of unusual shapes or cuts, a jig or fixture that will provide equal safety for the operator shall be used. On the completion of such operations, the guard shall be immediately replaced.

(f) A push stick shall be used on short or narrow stock when there is a possibility of the hand contacting the cutting tool.

(g) Each hand-fed circular ripsaw shall be equipped with a spreader to minimize the possibility of material squeezing the saw or of material kickbacks. The spreader shall be made of tempered steel, or its equivalent, and shall be slightly thinner than the saw kerf. It shall be of sufficient width to provide adequate stiffness or rigidity to resist any reasonable side thrust or blow tending to bend or throw it out of position. The spreader shall be attached so that it will remain in true alignment with the blade, even when either the saw or table is tilted, and should be placed so that there is not more than 1/2-inch space between the spreader and the back of the blade when the recommended saw blade is in its maximum “up” position. If a blade smaller than the maximum permissible size is used, the spreader shall be moved to within 1/2 inch of the blade. The provision of a spreader in connection with grooving, dadoing, or rabbeting is not required. On the completion of such operations, the spreader shall be immediately replaced.

(h) Each hand-fed circular ripsaw shall be provided with antikickback devices so located as to oppose the thrust or tendency of the saw blade to pick up the material or throw it back toward the operator. These devices shall be designed to provide holding power for all the thicknesses of material being cut.

WAC 296-155-370 (Cont.)

(4) Radial saws.

(a) Hoods and guards. Each saw shall be provided with a device that will completely enclose the upper portion of the blade down to a point that includes the end of the saw arbor. The upper hood shall be so constructed as to protect the operator from flying splinters and broken saw teeth, and to deflect sawdust away from the operator. The sides of the lower exposed portion of the saw blade shall be guarded from the tips of the blade teeth inward radially with no greater than 3/8-inch gullet exposure. The device shall automatically adjust itself to the thickness of the stock and remain in contact with the stock being cut for the 90° blade positions (0° bevel) throughout the full working range of miter position. A permanent label not less than 1-1/2 inches X 3/4 inch shall be affixed to the guard visible from the normal operating position, reading as follows:

WARNING: TO AVOID INJURY, SHUT OFF POWER BEFORE CLEARING A JAMMED LOWER GUARD

Such a label shall be colored standard danger red or orange in accordance with American National Standard Safety Color Code for Marking Physical Hazards, Z53.1-1979.

(b) Spreaders. When radial saws are used for ripping, a spreader shall be provided and shall be aligned with the saw blade.

(c) Antikickback devices. Antikickback devices located on both sides of the saw blade on the outfeed side, so as to oppose the thrust or tendency of the blade to pick up the material or to throw it back toward the operator, shall be used on each radial saw used for ripping. These devices shall be designed to provide adequate holding power for all the thicknesses of material being cut.

(d) Adjustable stops and return devices. An adjustable stop shall be provided to prevent the forward travel of the blade beyond the position necessary to complete the cut. A limit chain or other equally effective device shall be provided to prevent the saw blade from sliding beyond the edge of the table; or the table shall be extended to eliminate over-run.

(e) On any manually operated saw, installation shall be such that the front of the machine is slightly higher than the rear, or some other means shall be provided so that the cutting head will not roll or move out on the arm away from the column as a result of gravity or vibration. A permanent label not less than 1-1/2 inches X 3/4 inch shall be affixed to the cutting head visible from the normal crosscut operating position, reading as follows:

WARNING: TO AVOID INJURY, RETURN CARRIAGE TO THE FULL REAR POSITION AFTER EACH CROSSCUT TYPE OF OPERATION

Such a label shall be colored standard caution yellow in accordance with American National Standard Z53.1-1979.

(f) Direction of feed. Ripping and ploughing shall be against the direction in which the saw blade turns. The direction of the saw blade rotation shall be conspicuously marked on the hoods. In addition, a permanent label not less than 1-1/2 inches X 3/4 inch shall be affixed to the end of the guard at which the blade teeth exit the upper guard during operation. The label shall be at approximately the level of the arbor and shall read as follows:

DANGER: TO AVOID INJURY, DO NOT FEED MATERIAL INTO CUTTING TOOL FROM THIS END

Such a label shall be colored standard red or orange in accordance with American National Standard, Z53.1-1979.

WAC 296-155-370 (Cont.)

(5) All woodworking tools and machinery shall meet any other applicable requirements of American National Standards Institute, 01.1-1971, Safety Code for Woodworking Machinery.

(6) The control switch on all stationary radial arm saws shall be placed at the front of the saw or table and shall be properly recessed or hooded to prevent accidental contact.

(a) A firm level working area shall be provided at the front of all stationary radial arm saws. The area shall be kept free of all stumbling hazards.

(b) A push stick or similar device shall be used for pushing short material through power saws.

(7) Circular power miter saws. The requirements of subsection (4)(a) of this section applies to guarding circular power miter saws.

(8) Personal protective equipment. All personal protective equipment required for use shall conform to the requirements of Part C of this chapter.

[Statutory Authority: Chapter 49.17 RCW. 89-11-035 (Order 89-03), § 296-155-370, filed 5/15/89, effective 6/30/89. Statutory Authority: RCW 49.17.040 and 49.17.050. 86-03-074 (Order 86-14), § 296-155-370, filed 1/21/86; Order 74-26, § 296-155-370, filed 5/7/74, effective 6/6/74.]

WAC 296-155-375 Jacks-Lever and ratchet, screw, and hydraulic. General requirements.

(1) The manufacturer's rated capacity shall be legibly marked on all jacks and this capacity shall not be exceeded.

(2) All jacks shall have a positive stop to prevent over-travel.

(3) Specially designed jacks constructed for specific purposes shall meet the approval of the department of labor and industries before being placed in service.

(4) Control parts shall be so designed that the operator will not be subjected to hazard.

(5) Blocking. When it is necessary to provide a firm foundation, the base of the jack shall be blocked or cribbed. Where there is a possibility of slippage of the metal cap of the jack, a wood block shall be placed between the cap and the load.

(6) Operation and maintenance.

(a) After the load has been raised, it shall immediately be cribbed, blocked, or otherwise secured.

(b) Hydraulic jacks exposed to freezing temperatures shall be supplied with an adequate antifreeze liquid.

(c) All jacks shall be properly lubricated at regular intervals. The lubricating instructions of the manufacturer should be followed, and only lubricants recommended by the manufacturer should be used.

(7) Each jack shall be thoroughly inspected at times which depend upon the service conditions. Inspections shall be not less frequent than the following:

(a) For constant or intermittent use at one locality, once every six months;

(b) For jacks sent out of shop for special work, when sent out and when returned;

WAC 296-155-375 (Cont.)

(c) For a jack subjected to abnormal load or shock, immediately before and immediately thereafter.

(8) Repair or replacement parts shall be examined for possible defects.

(9) Jacks which are out of order shall be tagged accordingly, and shall not be used until repairs are made.
[Statutory Authority: Chapter 49.17 RCW. 94-15-096 (Order 94-07), § 296-155-375, filed 7/20/94, effective 9/20/94; 93-04-111 (Order 92-15), § 296-155-375, filed 2/3/93, effective 3/15/93; 91-11-070 (Order 91-01), § 296-155-375, filed 5/20/91, effective 6/20/91; Order 74-26, § 296-155-375, filed 5/7/74, effective 6/6/74.]

WAC 296-155-380 Air receivers.

(1) Application. This section applies to compressed air receivers, and other equipment used in providing and utilizing compressed air for performing operations such as cleaning, drilling, hoisting, and chipping. On the other hand, however, this section does not deal with the special problems created by using compressed air to convey materials nor the problems created when persons work in compressed air as in tunnels and caissons. These standards are not intended to apply to compressed air machinery and equipment used on transportation vehicles such as steam railroad cars, electric railway cars, and automotive equipment.

(2) New and existing equipment.

(a) All new air receivers installed after the effective date of these standards shall be constructed in accordance with the 1968 Edition of the A.S.M.E. Boiler and Pressure Vessel Code, section VIII.

(b) All safety valves used shall be constructed, installed, and maintained in accordance with the A.S.M.E. Boiler and Pressure Vessel Code, section VIII Edition 1968.

(3) Installation. Air receivers shall be so installed that all drains, handholes, and manholes therein are easily accessible. Air receivers should be supported with sufficient clearance to permit a complete external inspection and to avoid corrosion of external surfaces. Under no circumstances shall an air receiver be buried underground or located in an inaccessible place. The receiver should be located as close to the compressor or after-cooler as is possible in order to keep the discharge pipe short.

(4) Drains and traps. All air receivers having an internal and external operating pressure exceeding 15 psi with no limitation on size, and air receivers having an inside diameter exceeding six inches, with no limitation on pressure, if subject to corrosion, shall be supplied with a drain pipe and valve at the lowest point in the vessel; or a pipe may be used extending inward from any other location to within one-quarter inch of the lowest point. Adequate automatic traps may be installed in addition to drain valves. The drain valve on the air receiver shall be opened and the receiver completely drained frequently and at such intervals as to prevent the accumulation of oil and water in the receiver.

(5) Gages and valves.

(a) Every air receiver shall be equipped with an indicating pressure gage (so located as to be readily visible) and with one or more spring-loaded safety valves. The total relieving capacity of such safety valves shall be such as to prevent pressure in the receiver from exceeding the maximum allowable working pressure of the receiver by more than ten percent.

(b) No valve of any type shall be placed between the air receiver and its safety valve or valves.

(c) Safety appliances, such as safety valves, indicating devices and controlling devices, shall be constructed, located, and installed so that they cannot be readily rendered inoperative by any means, including the elements.

WAC 296-155-380 (Cont.)

(d) All safety valves shall be tested frequently and at regular intervals to determine whether they are in good operating condition.

[Statutory Authority: Chapter 49.17 RCW. 94-15-096 (Order 94-07), § 296-155-380, filed 7/20/94, effective 9/20/94.]

PART H
WELDING AND CUTTING

WAC 296-155-400 Gas welding and cutting.

(1) Transporting, moving, and storing compressed gas cylinders.

(a) Valve protection caps shall be in place and secured.

(b) When cylinders are hoisted, they shall be secured on a cradle, slingboard, or pallet. They shall not be hoisted or transported by means of magnets or choker slings.

(c) Cylinders shall be moved by tilting and rolling them on their bottom edges. They shall not be intentionally dropped, struck, or permitted to strike each other violently.

(d) When cylinders are transported by powered vehicles, they shall be secured in a vertical position.

(e) Valve protection caps shall not be used for lifting cylinders from one vertical position to another. Bars shall not be used under valves or valve protection caps to pry cylinders loose when frozen. Warm, not boiling, water shall be used to thaw cylinders loose.

(f) Unless cylinders are firmly secured on a special carrier intended for this purpose, regulators shall be removed and valve protection caps put in place before cylinders are moved.

(g) A suitable cylinder truck, chain, or other steadying device shall be used to keep cylinders from being knocked over while in use. Such cylinders are not considered to be “in storage.”

(h) When a job is finished, when cylinders are empty or when cylinders are moved at any time, the cylinder valve shall be closed.

(i) Compressed gas cylinders shall be secured in an upright position at all times except, if necessary, for short periods of time while cylinders are actually being hoisted or carried.

(j) Oxygen. Oxygen cylinders in storage shall be separated from fuel-gas cylinders or combustible materials (especially oil or grease), a minimum distance of 20 feet or by a noncombustible barrier at least 5 feet high having a fire-resistance rating of at least one-half hour.

(2) Placing cylinders.

(a) Cylinders shall be kept far enough away from the actual welding or cutting operation so that sparks, hot slag, or flame will not reach them. When this is impractical, fire resistant shields shall be provided.

(b) Cylinders shall be placed where they cannot become part of an electrical circuit. Electrodes shall not be struck against a cylinder to strike an arc.

(c) Fuel gas cylinders shall be placed with valve end up whenever they are in use. They shall not be placed in a location where they would be subject to open flame, hot metal, or other sources of artificial heat.

(d) Cylinders containing oxygen or acetylene or other fuel gas shall not be taken into confined spaces.

WAC 296-155-400 (Cont.)

(3) Treatment of cylinders.

(a) Cylinders, whether full or empty, shall not be used as rollers or supports.

(b) No person other than the gas supplier shall attempt to mix gases in a cylinder. No one except the owner of the cylinder or person authorized by the owner, shall refill a cylinder. No one shall use a cylinder's contents for purposes other than those intended by the supplier. All cylinders used shall meet the department of transportation requirements, Specification for Cylinders, (49 CFR Part 178, Subpart C).

(c) No damaged or defective cylinder shall be used.

(4) Use of fuel gas. The employer shall thoroughly instruct employees in the safe use of fuel gas, as follows:

(a) Before a regulator to a cylinder valve is connected, the valve shall be opened slightly and closed immediately. (This action is generally termed “cracking” and is intended to clear the valve of dust or dirt that might otherwise enter the regulator.) The person cracking the valve shall stand to one side of the outlet, not in front of it. The valve of a fuel gas cylinder shall not be cracked where the gas would reach welding work, sparks, flame, or other possible sources of ignition.

(b) The cylinder valve shall always be opened slowly to prevent damage to the regulator. For quick closing, valves on fuel gas cylinders shall not be opened more than 1 1/2 turns. When a special wrench is required, it shall be left in position on the stem of the valve while the cylinder is in use so that the fuel gas flow can be shut off quickly in case of an emergency. In the case of manifolded or coupled cylinders, at least one such wrench shall always be available for immediate use. Nothing shall be placed on top of a fuel gas cylinder, when in use, which may damage the safety device or interfere with the quick closing of the valve.

(c) Fuel gas shall not be used from cylinders through torches or other devices which are equipped with shutoff valves without reducing the pressure through a suitable regulator attached to the cylinder valve or manifold.

(d) Before a regulator is removed from a cylinder valve, the cylinder valve shall always be closed and the gas released from the regulator.

(e) If, when the valve on a fuel gas cylinder is opened, there is found to be a leak around the valve stem, the valve shall be closed and the gland nut tightened. If this action does not stop the leak, the use of the cylinder shall be discontinued, and it shall be properly tagged and removed from the work area. In the event that fuel gas should leak from the cylinder valve, rather than from the valve stem, and the gas cannot be shut off, the cylinder shall be properly tagged and removed from the work area. If a regulator attached to a cylinder valve will effectively stop a leak through the valve seat, the cylinder need not be removed from the work area.

(f) If a leak should develop at a fuse plug or other safety device, the cylinder shall be removed from the work area.

(g) Cylinders not having fixed hand wheels shall have keys, handles, or nonadjustable wrenches on valve stems while in service. In multiple cylinder installations one and only one key or handle is required for each manifold.

WAC 296-155-400 (Cont.)

(5) Fuel gas and oxygen manifolds.

(a) Fuel gas and oxygen manifolds shall bear the name of the substance they contain in letters at least 1-inch high which shall be either painted on the manifold or on a sign permanently attached to it.

(b) Fuel gas and oxygen manifolds shall be placed in safe, well ventilated, and accessible locations. They shall not be located within enclosed spaces.

(c) Manifold hose connections, including both ends of the supply hose that lead to the manifold, shall be such that the hose cannot be interchanged between fuel gas and oxygen manifolds and supply header connections. Adapters shall not be used to permit the interchange of hose. Hose connections shall be kept free of grease and oil.

(d) When not in use, manifold and header hose connections shall be capped.

(e) Nothing shall be placed on top of a manifold, when in use, which will damage the manifold or interfere with the quick closing of the valves.

(6) Hose.

(a) Fuel gas hose and oxygen hose shall be easily distinguishable from each other. The contrast may be made by different colors or by surface characteristics readily distinguishable by the sense of touch. Oxygen and fuel gas hoses shall not be interchangeable. A single hose having more than one gas passage shall not be used.

(b) When parallel sections of oxygen and fuel gas hose are taped together, not more than 4 inches out of 12 inches shall be covered by tape.

(c) All hose in use, carrying acetylene, oxygen, natural or manufactured fuel gas, or any gas or substance which may ignite or enter into combustion, or be in any way harmful to employees, shall be inspected at the beginning of each working shift. Defective hose shall be removed from service.

(d) Hose which has been subject to flashback, or which shows evidence of severe wear or damage, shall be tested to twice the normal pressure to which it is subject, but in no case less than 300 p.s.i. Defective hose, or hose in doubtful condition, shall not be used.

(e) Hose couplings shall be of the type that cannot be unlocked or disconnected by means of a straight pull without rotary motion.

(f) Boxes used for the storage of gas hose shall be ventilated.

(g) Hoses, cables, and other equipment shall be kept clear of passageways, ladders and stairs.

(7) Torches.

(a) Clogged torch tip openings shall be cleaned with suitable cleaning wires, drills, or other devices designed for such purpose.

(b) Torches in use shall be inspected at the beginning of each working shift for leaking shutoff valves, hose couplings, and tip connections. Defective torches shall not be used.

WAC 296-155-400 (Cont.)

(c) Torches shall be lighted by friction lighters or other approved devices, and not by matches or from hot work.

(8) Regulators and gauges. Oxygen and fuel gas pressure regulators, including their related gauges, shall be in proper working order while in use.

(9) Oil and grease hazards. Oxygen cylinders and fittings shall be kept away from oil or grease. Cylinders, cylinder caps and valves, couplings, regulators, hose, and apparatus shall be kept free from oil or greasy substances and shall not be handled with oily hands or gloves. Oxygen shall not be directed at oily surfaces, greasy clothes, or within a fuel oil or other storage tank or vessel.

(10) Additional rules. For additional details not covered in this Part, applicable portions of American National Standards Institute, Z49.1-1973, Safety in Welding and Cutting, shall apply.

[Statutory Authority: Chapter 49.17 RCW. 94-15-096 (Order 94-07), § 296-155-400, filed 7/20/94, effective 9/20/94. Statutory Authority: RCW 49.17.040 and 49.17.050. 86-03-074 (Order 86-14), § 296-155-400, filed 1/21/86; Order 74-26, § 296-155-400, filed 5/7/74, effective 6/6/74.]

WAC 296-155-405 Arc welding and cutting.

(1) Manual electrode holders.

(a) Only manual electrode holders which are specifically designed for arc welding and cutting, and are of a capacity capable of safely handling the maximum rated current required by the electrodes, shall be used.

(b) Any current-carrying parts passing through the portion of the holder which the arc welder or cutter grips in the hand, and the outer surfaces of the jaws of the holder, shall be fully insulated against the maximum voltage encountered to ground.

(2) Welding cables and connectors.

(a) All arc welding and cutting cables shall be of the completely insulated, flexible type, capable of handling the maximum current requirements of the work in progress, taking into account the duty cycle under which the arc welder or cutter is working.

(b) Only cable free from repair or splices for a minimum distance of 10 feet from the cable end to which the electrode holder is connected shall be used, except that cables with standard insulated connectors or with splices whose insulating quality is equal to that of the cable are permitted.

(c) When it becomes necessary to connect or splice lengths of cable one to another, substantial insulated connectors of a capacity at least equivalent to that of the cable shall be used. If connections are effected by means of cable lugs, they shall be securely fastened together to give good electrical contact, and the exposed metal parts of the lugs shall be completely insulated.

(d) Cables in need of repair shall not be used. When a cable, other than the cable lead referred to in subdivision (b) of this subsection, becomes worn to the extent of exposing bare conductors, the portion thus exposed shall be protected by means of rubber and friction tape or other equivalent insulation.

WAC 296-155-405 (Cont.)

(3) Ground returns and machine grounding.

(a) A ground return cable shall have a safe current carrying capacity equal to or exceeding the specified maximum output capacity of the arc welding or cutting unit which it services. When a single ground return cable services more than one unit, its safe current-carrying capacity shall equal or exceed the total specified maximum output capacities of all the units which it services.

(b) Pipelines containing gases or flammable liquids, or conduits containing electrical circuits, shall not be used as a ground return. For welding on natural gas pipelines, the technical portions of regulations issued by the Department of Transportation, Office of Pipeline Safety, Minimum Federal Safety Standards for Gas Pipelines shall apply.(49 CFR Part 192, Subpart C.)

(c) When a structure or pipeline is employed as a ground return circuit, it shall be determined that the required electrical contact exist at all joints. The generation of an arc, sparks, or heat at any point shall cause rejection of the structures as a ground circuit.

(d) When a structure or pipeline is continuously employed as a ground return circuit, all joints shall be bonded, and periodic inspections shall be conducted to ensure that no condition of electrolysis or fire hazard exists by virtue of such use.

(e) The frames of all arc welding and cutting machines shall be grounded either through a third wire in the cable containing the circuit conductor or through a separate wire which is grounded at the source of the current. Grounding circuits, other than by means of the structure, shall be checked to ensure that the circuit between the ground and the grounded power conductor has resistance low enough to permit sufficient current to flow to cause the fuse or circuit breaker to interrupt the current.

(f) All ground connections shall be inspected to ensure that they are mechanically strong and electrically adequate for the required current.

(4) Operating instructions. Employers shall instruct employees in the safe means of arc welding and cutting as follows:

(a) When electrode holders are to be left unattended, the electrodes shall be removed and the holders shall be so placed or protected that they cannot make electrical contact with employees or conducting objects.

(b) Hot electrode holders shall not be dipped in water; to do so may expose the arc welder or cutter to electric shock.

(c) When the arc welder or cutter has occasion to leave work or to stop work for any appreciable length of time, or when the arc welding or cutting machine is to be moved, the power supply switch to the equipment shall be opened.

(d) Any faulty or defective equipment shall be reported to the supervisor.

(e) See WAC 296-155-452 for additional requirements.

(5) Shielding. Whenever practical, all arc welding and cutting operations shall be shielded by noncombustible or flameproof screens which will protect employees and other persons working in the vicinity from the direct rays of the arc.

WAC 296-155-405 (Cont.)

(6) Employee protection. Where welding or cutting operations are being performed in areas where it is possible for molten slag to contact other employees, those employees shall be protected from being burned by providing overhead protection, barricading the impact area, or other effective means.

[Statutory Authority: Chapter 49.17 RCW. 94-15-096 (Order 94-07), § 296-155-405, filed 7/20/94, effective 9/20/94; 88-23-054 (Order 88-25), § 296-155-405, filed 11/14/88. Statutory Authority: RCW 49.17.040 and 49.17.050. 86-03-074 (Order 86-14), § 296-155-405, filed 1/21/86; Order 74-26, § 296-155-405, filed 5/7/74, effective 6/6/74.]

WAC 296-155-407 Protective clothing.

(1) General requirements. Employees exposed to the hazards created by welding, cutting, or brazing operations shall be protected by personal protective equipment in accordance with the requirements of chapter 296-800 WAC, and chapter 296-24 WAC, Part I. Appropriate protective clothing required for any welding operation will vary with the size, nature and location of the work to be performed.

(2) Specified protective clothing. Protective means which may be employed are as follows:

(a) Except when engaged in light work, all welders should wear flameproof gauntlet gloves.

(b) Flameproof aprons made of leather, or other suitable material may also be desirable as protection against radiated heat and sparks.

(c) Woolen clothing preferable to cotton because it is not so readily ignited and helps protect the welder from changes in temperature. Cotton clothing, if used, should be chemically treated to reduce its combustibility. All outer clothing such as jumpers or overalls should be reasonably free from oil or grease.

(d) Sparks may lodge in rolled-up sleeves or pockets of clothing, or cuffs of overalls or trousers. It is therefore recommended that sleeves and collars be kept buttoned and pockets be eliminated from the front of overalls and aprons. Trousers or overalls should not be turned up on the outside.

Note: For heavy work, fire-resistant leggings, high boots, or other equivalent means should be used.

(e) In production work a sheet metal screen in front of the worker's legs can provide further protection against sparks and molten metal in cutting operations.

(f) Capes or shoulder covers made of leather or other suitable materials should be worn during overhead welding or cutting operations. Leather skull caps may be worn under helmets to prevent head burns.

(g) Where there is exposure to sharp or heavy falling objects, or a hazard of bumping in confined spaces, hard hats or head protectors shall be used.

[Statutory Authority: RCW 49.17.010, .040, .050. 01-11-038 (Order 99-36), § 296-155-407, filed 05/09/01, effective 09/01/01. Statutory Authority: Chapter 49.17 RCW. 95-04-007, § 296-155-407, filed 1/18/95, effective 3/1/95. Statutory Authority: RCW 49.17.040 and 49.17.050. 86-03-074 (Order 86-14), § 296-155-407, filed 1/21/86.]

WAC 296-155-410 Fire prevention.

(1) When practical, objects to be welded, cut, or heated shall be moved to a designated safe location or, if the objects to be welded, cut, or heated cannot be readily moved, all movable fire hazards in the vicinity shall be taken to a safe place, or otherwise protected.

WAC 296-155-410 (Cont.)

(2) If the object to be welded, cut, or heated cannot be moved and if all the fire hazards cannot be removed, positive means shall be taken to confine the heat, sparks, and slag, and to protect the immovable fire hazards from them.

(3) No welding, cutting, or heating shall be done where the application of flammable paints, or the presence of other flammable compounds, or heavy dust concentrations creates a hazard.

(4) Suitable fire extinguishing equipment shall be immediately available in the work area and shall be maintained in a state of readiness for instant use.

(5) When the welding, cutting, or heating operation is such that normal fire prevention precautions are not sufficient, additional personnel shall be assigned to guard against fire while the actual welding, cutting, or heating operation is being performed, and for a sufficient period of time after completion of the work to ensure that no possibility of fire exists. Such personnel shall be instructed as to the specific anticipated fire hazards and how the firefighting equipment provided is to be used.

(6) When welding, cutting, or heating is performed on walls, floors, and ceilings, since direct penetration of sparks or heat transfer may introduce a fire hazard to an adjacent area, the same precautions shall be taken on the opposite side as are taken on the side on which the welding is being performed.

(7) For the elimination of possible fire in enclosed spaces as a result of gas escaping through leaking or improperly closed torch valves, the gas supply to the torch shall be positively shut off at some point outside the enclosed space whenever the torch is not to be used or whenever the torch is left unattended for a substantial period of time, such as during the lunch period. Overnight and at the change of shifts, the torch and hose shall be removed from the confined space. Open end fuel gas and oxygen hoses shall be immediately removed from enclosed spaces when they are disconnected from the torch or other gas-consuming device.

(8) Except when the contents are being removed or transferred, drums, pails, and other containers, which contain or have contained flammable liquids, shall be kept closed. Empty containers shall be removed to a safe area apart from hot work operations or open flames.

(9) Drums, containers, or hollow structures which have contained toxic or flammable substances shall, before welding, cutting, or heating is undertaken on them, either be filled with water or thoroughly cleaned of such substances and ventilated and tested. For welding, cutting and heating on steel pipelines containing natural gas, the pertinent portions of regulations issued by the Department of Transportation, Office of Pipeline Safety, Minimum Federal Safety Standards for Gas Pipelines, shall apply. (49 CFR Part 192, Subpart C.)

(10) Before heat is applied to a drum, container, or hollow structure, a vent or opening shall be provided for the release of any built-up pressure during the application of heat.

[Order 74-26, § 296-155-410, filed 5/7/74, effective 6/6/74.]

WAC 296-155-415 Ventilation and protection in welding, cutting, and heating.

(1) Mechanical ventilation. For purposes of this section, mechanical ventilation shall meet the following requirements:

(a) Mechanical ventilation shall consist of either general mechanical ventilation systems or local exhaust systems.

WAC 296-155-415 (Cont.)

(b) General mechanical ventilation shall be of sufficient capacity and so arranged as to produce the number of air changes necessary to maintain welding fumes and smoke within safe limits, as defined in Part B of this chapter.

(c) Local exhaust ventilation shall consist of freely movable hoods intended to be placed by the welder or burner as close as practicable to the work. This system shall be of sufficient capacity and so arranged as to remove fumes and smoke at the source and keep the concentration of them in the breathing zone within safe limits as defined in Part B of this chapter.

(d) Contaminated air exhausted from a working space shall be discharged into the open air or otherwise clear of the source of intake air.

(e) All air replacing that withdrawn shall be clean and respirable.

(f) Oxygen shall not be used for ventilation purposes, comfort cooling, blowing dust from clothing, or for cleaning the work area.

(2) Welding, cutting, and heating in confined spaces.

(a) Except as provided in subdivision (b) of this subsection and subdivision (b) of subsection (3) of this section, either general mechanical or local exhaust ventilation meeting the requirements of subsection (1) of this section shall be provided whenever welding, cutting, or heating is performed in a confined space.

(b) When sufficient ventilation cannot be obtained without blocking the means of access, employees in the confined space shall be protected by air line respirators in accordance with the requirements of Part C of this chapter, and an employee on the outside of such a confined space shall be assigned to maintain communication with those working within it and to aid them in an emergency.

(3) Welding, cutting, or heating of metals of toxic significance.

(a) Welding, cutting, or heating in any enclosed spaces involving the metals specified in this subsection shall be performed with either general mechanical or local exhaust ventilation meeting the requirements of subsection (1) of this section:

(i) Zinc-bearing base or filler metals or metals coated with zinc-bearing materials.

(ii) Lead base metals;

(iii) Cadmium-bearing filler materials;

(iv) Chromium-bearing metals or metals coated with chromium-bearing materials.

(b) Welding, cutting, or heating in any enclosed spaces involving the metals specified in this subdivision shall be performed with local exhaust ventilation in accordance with the requirements of subsection (1) of this section, or employees shall be protected by air line respirators in accordance with the requirements of Part C of this chapter.

(i) Metals containing lead, other than as an impurity, or metals coated with lead-bearing materials;

WAC 296-155-415 (Cont.)

(ii) Cadmium-bearing or cadmium-coated base metals;

(iii) Metals coated with mercury-bearing metals;

(iv) Beryllium-containing base or filler metals. Because of its high toxicity, work involving beryllium shall be done with both local exhaust ventilation and air line respirators.

(c) Employees performing such operations in the open air shall be protected by filter-type respirators in accordance with the requirements of Part C of this chapter, except that employees performing such operations on beryllium-containing base or filler metals shall be protected by air line respirators in accordance with the requirements of Part C of this chapter.

(d) Other employees exposed to the same atmosphere as the welders or burners shall be protected in the same manner as the welder or burner.

(4) Inert-gas metal-arc welding.

(a) Since the inert-gas metal-arc welding process involves the production of ultra-violet radiation of intensities of 5 to 30 times that produced during shielded metal-arc welding, the decomposition of chlorinated solvents by ultraviolet rays, and the liberation of toxic fuels and gases, employees shall not be permitted to engage in, or be exposed to the process until the following special precautions have been taken:

(i) The use of chlorinated solvents shall be kept at least 200 feet, unless shielded, from the exposed arc, and surfaces prepared with chlorinated solvents shall be thoroughly dry before welding is permitted on such surfaces.

(ii) Employees in the area not protected from the arc by screening shall be protected by filter lenses meeting the requirements of Part C of this chapter. When two or more welders are exposed to each other's arc, filter lens goggles of a suitable type, meeting the requirements of Part C of this chapter shall be worn under welding helmets. Hand shields to protect the welder against flashes and radiant energy shall be used when either the helmet is lifted or the shield is removed.

(iii) Welders and other employees who are exposed to radiation shall be suitably protected so that the skin is covered completely to prevent burns and other damage by ultraviolet rays. Welding helmets and hand shields shall be free of leaks and openings, and free of highly reflective surfaces.

(iv) When inert-gas metal-arc welding is being performed on stainless steel, the requirements of subdivision (b) of subsection (3) of this section shall be met to protect against dangerous concentrations of nitrogen dioxide.

(5) General welding, cutting, and heating.

(a) Welding, cutting, and heating, not involving conditions or materials described in subsections (2), (3), or (4) of this section, may normally be done without mechanical ventilation or respiratory protective equipment, but where, because of unusual physical or atmospheric conditions, an unsafe accumulation of contaminants exists, suitable mechanical ventilation or respiratory protective equipment shall be provided.

WAC 296-155-415 (Cont.)

(b) Employees performing any type of welding, cutting, or heating shall be protected by suitable eye protective equipment in accordance with the requirements of Part C of this chapter.

[Order 74-26, § 296-155-415, filed 5/7/74, effective 6/6/74.]

WAC 296-155-420 Welding, cutting, and heating in way of preservative coatings.

(1) Before welding, cutting, or heating is commenced on any surface covered by a preservative coating whose flammability is not known, a test shall be made by a competent person to determine its flammability. Preservative coatings shall be considered to be highly flammable when scrapings burn with extreme rapidity.

(2) Precautions shall be taken to prevent ignition of highly flammable hardened preservative coatings. When coatings are determined to be highly flammable, they shall be stripped from the area to be heated to prevent ignition.

(3) Protection against toxic preservative coatings:

(a) In enclosed spaces, all surfaces covered with toxic preservatives shall be stripped of all toxic coatings for a distance of at least 4 inches from the area of heat application, or the employees shall be protected by air line respirators, meeting the requirements of Part C of this chapter.

(b) In the open air, employees shall be protected by a respirator, in accordance with requirements of Part C of this chapter.

(4) The preservative coatings shall be removed a sufficient distance from the area to be heated to ensure that the temperature of the unstripped metal will not be appreciably raised. Artificial cooling of the metal surrounding the heating area may be used to limit the size of the area required to be cleaned.

[Order 74-26, § 296-155-420, filed 5/7/74, effective 6/6/74.]

PART I
ELECTRICAL

WAC 296-155-426 Introduction. This part addresses electrical safety requirements that are necessary for the practical safeguarding of employees involved in construction work and is divided into four major divisions and applicable definitions as follows:

(1) Introduction and definitions. Definitions applicable to this part are contained in WAC 296-155-462.

(2) Installation safety requirements. Installation safety requirements are contained in WAC 296-155-441 through 296-155-459. Included in this category are electric equipment and installations used to provide electric power and light on jobsites.

(3) Safety-related work practices. Safety-related work practices are contained in WAC 296-155-428 and 296-155-429. In addition to covering the hazards arising from the use of electricity at jobsites, these regulations also cover the hazards arising from the accidental contact, direct or indirect, by employees with all energized lines, above or below ground, passing through or near the jobsite.

(4) Safety-related maintenance and environmental considerations. Safety-related maintenance and environmental considerations are contained in WAC 296-155-432 and 296-155-434.

(5) Safety requirements for special equipment. Safety requirements for special equipment are contained in WAC 296-155-437.

[Statutory Authority: Chapter 49.17 RCW. 88-11-021 (Order 88-04), § 296-155-426, filed 5/11/88.]

WAC 296-155-428 General requirements.

(1) Protection of employees.

(a) No employer shall permit an employee to work in such proximity to any part of an electric power circuit that the employee could contact the electric power circuit in the course of work, unless the employee is protected against electric shock by de-energizing the circuit and grounding it or by guarding it effectively by insulation or other means.

(b) No person, firm, corporation, or agent of same, shall require or permit any employee to perform any function in proximity to electrical conductors or to engage in any excavation, construction, demolition, repair, or other operation, unless and until danger from accidental contact with said electrical conductors has been effectively guarded by de-energizing the circuit and grounding it or by guarding it by effective insulation or other effective means.

(c) In work areas where the exact location of underground electric powerlines is unknown, no activity which may bring employees into contact with those powerlines shall begin until the powerlines have been positively and unmistakably de-energized and grounded.

(d) Before work is begun the employer shall ascertain by inquiry or direct observation, or by instruments, whether any part of an energized electric power circuit, exposed or concealed, is so located that the performance of the work may bring any person, tool, or machine into physical or electrical contact with the electric power circuit. The employer shall post and maintain proper warning signs where such a circuit exists. The employer shall advise employees of the location of such lines, the hazards involved, and the protective measures to be taken.

WAC 296-155-428 (Cont.)

(e) No work shall be performed, no material shall be piled, stored or otherwise handled, no scaffolding, commercial signs, or structures shall be erected or dismantled, nor any tools, machinery or equipment operated within the specified minimum distances from any energized high voltage electrical conductor capable of energizing the material or equipment; except where the electrical distribution and transmission lines have been de-energized and visibly grounded at point of work, or where insulating barriers not a part of or an attachment to the equipment have been erected, to prevent physical contact with the lines, equipment shall be operated proximate to, under, over, by, or near energized conductors only in accordance with the following:

(i) For lines rated 50 kV. or below, minimum clearance between the lines and any part of the equipment or load shall be ten feet.

(ii) For lines rated over 50 kV. minimum, clearance between the lines and any part of the equipment or load shall be ten feet plus 0.4 inch or each 1 kV. over 50 kV., or twice the length of the line insulator but never less than ten feet.

(f) Work on energized equipment. Only qualified persons shall work on electric circuit parts of equipment that have not been deenergized under the procedures of WAC 296-155-429(4). Such persons shall be capable of working safely on energized circuits and shall be familiar with the proper use of special precautionary techniques, personal protective equipment, insulating and shielding materials, and insulated tools.

(g) Overhead electric lines. Where overhead electric conductors are encountered in proximity to a work area, the employer shall be responsible for:

(i) Ascertaining the voltage and minimum clearance distance required; and

(ii) Maintaining the minimum clearance distance; and

(iii) Ensuring that the requirements of this section are complied with.

(h) If relocation of the electrical conductors is necessary, arrangements shall be made with the owners of the lines for such relocation.

(i) Barriers.

(i) Barriers shall be of such character and construction as to effectively provide the necessary protection without creating other hazards or jeopardizing the operation of the electrical circuits.

(ii) Barriers installed within the ten feet clearance from conductors shall be installed only under the supervision of authorized and qualified persons and this shall include a representative of the electrical utility or owner involved.

(j) Exceptions.

(i) These rules do not apply to the construction, reconstruction, operation, and maintenance, of overhead electrical lines, structures, and associated equipment by authorized and qualified electrical workers.

WAC 296-155-428 (Cont.)

(ii) These rules do not apply to authorized and qualified employees engaged in the construction, reconstruction, operation, and maintenance, of overhead electrical circuits or conductors and associated equipment of rail transportation systems or electrical generating, transmission, distribution and communication systems which are covered by chapters 296-45 and 296-32 WAC.

(k) Special precautions must be taken.

(i) When handling any winch lines, guy wires, or other free cable, wire or rope in the vicinity of any electrical conductors.

(ii) When pulling a winch line, or other cable or rope under energized electrical conductors from a boom, mast, pile driver, etc., in such a manner as to make possible an approach to within ten feet of a conductor.

(iii) When there is possibility of a winch line, cable, etc., either becoming disconnected or breaking under load because of excessive strain and flipping up into overhead conductors.

(iv) When placing steel, concrete reinforcement, wire mesh, etc.

(v) When handling pipe or rod sections in connection with digging wells or test holes.

(vi) When moving construction equipment, apparatus, machinery, etc., all such movements must avoid striking supporting structures, guy wires, or other elements of the electrical utility system causing the conductors to so swing or move as to decrease clearances to less than ten feet from construction equipment, or to cause them to come together.

(l) Warning sign required.

(i) An approved durable warning sign legible at twelve feet, reading “It is unlawful to operate this equipment within ten feet of electrical conductors” shall be posted and maintained in plain view of the operator at the controls of each crane, derrick, shovel, drilling rig, pile driver or similar apparatus which is capable of vertical, lateral or swinging motion.

(ii) A similar sign shall be installed on the outside of the equipment and located as to be readily visible to mechanics or other persons engaged in the work operation.

(iii) Signs shall be not less than 6" x 8" dimensions with the word “WARNING” or “DANGER” in large letters and painted red across the top and the other letters in black painted on yellow background.

(m) Any overhead wire shall be considered to be an energized line until the owner of such line or the electrical utility authorities indicate that it is not an energized line and it has been visibly grounded.

(2) Passageways and open spaces.

(a) Barriers or other means of guarding shall be provided to ensure that workspace for electrical equipment will not be used as a passageway during periods when energized parts of electrical equipment are exposed.

WAC 296-155-428 (Cont.)

(b) Working spaces, walkways, and similar locations shall be kept clear of cords so as not to create a tripping hazard to employees.

(3) Load ratings. In existing installations, no changes in circuit protection shall be made to increase the load in excess of the load rating of the circuit wiring.

(4) Fuses. When fuses are installed or removed with one or both terminals energized, special tools insulated for the voltage shall be used.

(5) Cords and cables.

(a) Worn or frayed electric cords or cables shall not be used.

(b) Extension cords shall not be fastened with staples, hung from nails, or suspended by wire.

(6) Interlocks. Only a qualified person following the requirements of this section may defeat an electrical safety interlock, and then only temporarily while they are working on the equipment. The interlock systems shall be returned to its operable condition when this work is completed.

(7) Portable electric equipment-Handling. Portable equipment shall be handled in a manner which will not cause damage. Flexible electric cords connected to equipment shall not be used for raising or lowering the equipment. Flexible cords shall not be fastened with staples or otherwise hung in such a fashion as could damage the outer jacket or insulation.

(8) Visual inspection. When an attachment plug is to be connected to a receptacle (including any on a cord set), the relationship of the plug and receptacle contacts shall first be checked to ensure they are of proper mating configurations.

(9) Connecting attachment plugs.

(a) Employees' hands shall not be wet when plugging and unplugging flexible cords and cord-and plug-connected equipment, if energized equipment is involved.

(b) Energized plug and receptacle connections shall be handled only with insulating protective equipment if the condition of the connection could provide a conducting path to the employee's hand (if, for example, a cord connector is wet from being immersed in water).

(c) Locking-type connectors shall be properly secured after connection.

(10) Routine opening and closing circuits. Load rated switches, circuit breakers, or other devices specifically designed as disconnecting means shall be used for the opening, reversing, or closing of circuits under load conditions. Cable connectors not of the load-break type, fuses, terminal lugs, and cable splice connections shall not be used for such purposes, except in an emergency.

(11) Reclosing circuits after protective device operation. After a circuit is deenergized by a circuit protective device, the circuit shall not be manually reenergized until it has been determined that the equipment and circuit can be safety energized. This repetitive manual reclosing of circuit breakers or reenergizing circuits through replaced fuses is prohibited.

Note: When it can be determined from the design of the circuit and the overcurrent devices involved that the automatic operation of a device was caused by an overload rather than a fault connection, no examination of the circuit or connected equipment is needed before the circuit is reenergized.

WAC 296-155-428 (Cont.)

(12) Test instruments and equipment-Use. Only qualified persons shall perform testing work on electric circuits or equipment.

(13) Visual inspection. Test instruments and equipment and all associated test leads, cables, power cords, probes, and connectors shall be visually inspected for external defects and damage before the equipment is used. If there is a defect or evidence of damage that might expose an employee to injury, the defective or damaged item shall be removed from service, and no employee shall use it until necessary repairs and tests to render the equipment safe have been made.

(14) Rating of equipment. Test instruments and equipment and their accessories shall be rated for the circuits and equipment to which they will be connected and shall be designed for the environment in which they will be used.

(15) Occasional use of flammable or ignitible materials. Where flammable materials are present only occasionally, electric equipment capable of igniting them shall not be used, unless measures are taken to prevent hazardous conditions from developing. Such materials include, but are not limited to: Flammable gases, vapors, or liquids; combustible dust; and ignitible fibers or flyings.

(16) Work on energized equipment. Only qualified persons shall work on electric circuit parts of equipment that have not been deenergized under the procedures of WAC 296-155-429(4). Such persons shall be capable of working safely on energized circuits and shall be familiar with the proper use of special precautionary techniques, personal protective equipment, insulating and shielding materials, and insulated tools.

(17) Overhead lines. If work is to be performed near overhead lines, the lines shall be deenergized and grounded, or other protective measures shall be provided before work is started. If the lines are to be deenergized, arrangements shall be made with the person or organization that operates or controls the electric circuits involved to deenergize and ground them. If protective measures, such as guarding, isolating, or insulating, these precautions shall prevent employees from contacting such lines directly with any part of their body or indirectly through conductive materials, tools, or equipment.

(18) Unqualified persons. When an unqualified person is working in an elevated position, or on the ground, near overhead lines, the location shall be such that the person and the longest conductive object they may contact cannot come closer to any unguarded, energized overhead line than the following distances:

(a) For voltages to ground 50kV or below-10 ft.;

(b) For voltages to ground over 50kV-10 ft. plus 0.4 inch for every 1kV over 50kV.

(19) Qualified persons. When a qualified person is working in the vicinity of overhead lines, whether in an elevated position or on the ground, the person shall not approach or take any conductive object without an approved insulating handle closer to exposed energized parts that are shown in subsection (1)(e) of this section unless:

(a) The person is insulated from the energized part (gloves, with sleeves if necessary), rated for the voltage involved are considered to be insulation of the person from the energized part on which work is performed; or

(b) The energized part is insulated both from all other conductive objects at a different potential and from the person; or

WAC 296-155-428 (Cont.)

(c) The person is insulated from all conductive objects at a potential different from that of the energized part.

(20) Vehicular and mechanical equipment.

(a) Any vehicle or mechanical equipment capable of having parts of its structure elevated near energized overhead lines shall be operated so that a clearance of 10 ft. is maintained. If the voltage is higher than 50kV, the clearance shall be increased 0.4 inch for every 1kV over the voltage. However, under any of the following conditions, the clearance may be reduced:

(i) If the vehicle is in transit with its structure lowered, the clearance may be reduced to 4 ft. If the voltage is higher than 50kV, the clearance shall be increased 0.4 inch for every 1kV over that voltage.

(ii) If insulating barriers are installed to prevent contact with the lines, and if the barriers are rated for the voltage of the line being guarded and are not a part of or an attachment to the vehicle or its raised structure, the clearance may be reduced to a distance within the designed working dimensions of the insulating barrier.

(b) If the equipment is an aerial lift insulated for the voltage involved, and if the work is performed by a qualified person, the clearance (between the uninsulated portion of the aerial lift and the power line) may be reduced to the distance given in (a) through (d) of this subsection.

(c) Employees standing on the ground shall not contact the vehicle or mechanical equipment or any of its attachments, unless:

(i) The employee is using protective equipment rated for the voltage; or

(ii) The equipment is located so that no uninsulated part of its structure (that portion of the structure that provides a conductive path to employees on the ground) can come closer to the line than permitted in this section.

(d) If any vehicle or mechanical equipment capable of having parts of its structure elevated near energized overhead lines is of grounding shall not stand at the grounding location whenever there is a possibility of overhead line contact. Additional precautions, such as the use of barricades or insulation, shall be taken to protect employees from hazardous ground potentials, depending on earth resistivity and fault currents, which can develop within the first few feet or more outward from the grounding point.

(21) Illumination.

(a) Employees shall not enter spaces containing exposed energized parts, unless illumination is provided that enables the employees to perform the work safely.

(b) Where lack of illumination or an obstruction precludes observation of the work to be performed, employees shall not perform tasks near exposed energized parts. Employees shall not reach blindly into areas which may contain energized parts.

WAC 296-155-428 (Cont.)

(22) Confined or enclosed space (such as a manhole or vault) that contains exposed energized parts, the employer shall provide, and the employee shall use, protective shields, protective barriers, or insulating materials as necessary to avoid inadvertent contact with these parts. Doors, hinged panels, and the like shall be secured to prevent their swinging into an employee and causing the employee to contact exposed energized parts.

(23) Conductive materials and equipment. Conductive materials and equipment that are in contact with any part of an employee's body shall be handled in a manner that will prevent them from contacting exposed energized conductors or circuit parts. If an employee handle long dimensional conductive objects (such as ducts and pipes) practices (such as the use of insulation, guarding, and material handling techniques) which will minimize the hazard.

(24) Portable ladders. Portable ladders shall have nonconductive siderails if they are used where the employee or the ladder could contact exposed energized parts.

(25) Conductive apparel. Conductive articles of jewelry and clothing (such as watch bands, bracelets, rings, key chains, necklaces, metalized aprons, cloth with conductive thread, or metal headgear) shall not be worn if they might contact exposed energized parts.

(26) Housekeeping duties.

(a) Where live parts present an electrical contact hazard, employees shall not perform housekeeping duties at such close distances to the parts that there is a possibility of contact, unless adequate safeguards (such as insulating equipment or barriers) are provided.

(b) Electrically conductive cleaning materials (including conductive solids such as steel wool, metalized cloth, and silicon carbide, as well as conductive liquid solutions) shall not be used in proximity to energized parts unless procedures are followed which will prevent electrical contact.

[Statutory Authority: Chapter 49.17 RCW. 94-15-096 (Order 94-07), § 296-155-428, filed 7/20/94, effective 9/20/94; 92-23-017 (Order 92-13), § 296-155-428, filed 11/10/92, effective 12/18/92; 88-11-021 (Order 88-04), § 296-155-428, filed 5/11/88.]

WAC 296-155-429 Lockout and tagging of circuits.

(1) Controls. Controls that are deactivated during the course of work on energized or deenergized equipment or circuits shall be tagged and padlocked in the open position.

(2) Equipment and circuits. Equipment or circuits that are de-energized shall be rendered inoperative and have tags and locked padlocks attached at all points where such equipment or circuits can be energized.

(3) Tags. Tags shall be placed to identify plainly the equipment or circuits being worked on.

(4) Lockout and tagging. While any employee is exposed to contact with parts of fixed electric equipment or circuits which have been deenergized, the circuits energizing the parts shall be locked out or tagged or both according to the requirements of this section. The requirements shall be followed in the order in which they are presented (i.e., (a) of this subsection first, then (b) of this subsection).

Note 1: As used in this section, fixed equipment refers to equipment fastened in connected by permanent wiring methods.

Note 2: Lockout and tagging procedures that comply with chapter 296-24 WAC, Part A-4 will also be deemed to comply with this subsection provided that:

WAC 296-155-429 (Cont.)

1. The procedures address the electrical safety hazards covered by this part; and
2. The procedures also incorporate the requirements of (c)(iv) and (d)(ii) of this subsection.

(a) Procedures. The employer shall maintain a written copy of the procedures outlined in this subsection and shall make it available for inspection by employees and by the director and his/her authorized representative.

Note: The written procedures may be in the form of a copy of this section, WAC 296-155-429.

(b) Deenergizing equipment.

(i) Safe procedures for deenergizing circuits and equipment shall be determined before circuits or equipment are deenergized.

(ii) The circuits and equipment to be worked on shall be disconnected from all electric energy sources. Control circuit devices, such as push buttons, selector switches, and interlocks, shall not be used as the sole means for deenergizing circuits or equipment. Interlocks for electric equipment shall not be used as a substitute for lockout and tagging procedures.

(iii) Stored electric energy which might endanger personnel shall be released. Capacitors shall be discharged and high capacitance elements shall be short-circuited and grounded, if the stored electric energy might endanger personnel.

Note: If the capacitors or associated equipment are handled in meeting this requirement, they shall be treated as energized.

(iv) Stored nonelectrical energy in devices that could reenergize electric circuit parts shall be blocked or relieved to the extent that the circuit parts could not be accidentally energized by the device.

(c) Application of locks and tags.

(i) A lock and a tag shall be placed on each disconnecting means used to deenergize circuits and equipment on which work is to be performed, except as provided in (c)(iii) and (v) of this subsection. The lock shall be attached to prevent persons from operating the disconnecting means unless they resort to undue force or the use of tools.

(ii) Each tag shall contain a statement prohibiting unauthorized operation of the disconnecting means and removal of the tag.

(iii) If a lock cannot be applied, or if the employer can demonstrate that tagging procedures will provide a level of safety equivalent to that obtained by the use of a lock, a tag may be used without a lock.

(iv) A tag used without a lock, as permitted by item (iii) of this subsection, shall be supplemented by at least one additional safety measure that provides a level of safety equivalent to that obtained by the use of a lock. Examples of additional safety measures include the removal of an isolating circuit element, blocking of a controlling switch, or opening of an extra disconnecting device.

WAC 296-155-429 (Cont.)

(v) A lock may be placed without a tag only under the following conditions:

(A) Only one circuit or piece of equipment is deenergized; and

(B) The lockout period does not extend beyond the work shifts; and

(C) Employees exposed to the hazards associated with reenergizing the circuit or equipment are familiar with this procedure.

(d) Verification of deenergized condition. The requirements of this subsection shall be met before any circuits or equipment can be considered and worked as deenergized.

(i) A qualified person shall operate the equipment operating controls or otherwise verify that the equipment cannot be restarted.

(ii) A qualified person shall use test equipment to test the circuit elements and electrical parts of equipment to which employees will be exposed and shall verify that the circuit elements and equipment parts are deenergized. The test shall also determine if any energized conditions exists as a result of inadvertently induced voltage or unrelated voltage backfeed even though specific parts of the circuit have been deenergized and presumed to be safe. If the circuit to be tested is over 600 volts, nominal, the test equipment shall be checked for proper operation immediately before and immediately after this test.

(e) Reenergizing equipment. These requirements shall be met, in the order given, before circuits or equipment are reenergized, even temporarily.

(i) A qualified person shall conduct tests and visual inspections, as necessary, to verify that all tools, electrical jumpers, shorts, grounds, and other such devices have been removed, so that the circuits and equipment can be safely energized.

(ii) Employees exposed to the hazards associated with reenergizing the circuit or equipment shall be warned to stay clear of circuits and equipment.

(iii) Each lock and tag shall be removed by the employee who applied it or under his or her direct supervision. However, if this employee is absent from the work place, then the lock or tag may be removed by a qualified person designated to perform this task provided that:

(A) The employer ensures that the employee who applied the lock or tag is not available at the work place; and

(B) The employer ensures that the employee is aware that the lock or tag has been removed before he or she resumes work at that work place.

(iv) There shall be a visual determination that all employees are clear of the circuits and equipment.

[Statutory Authority: Chapter 49.17 RCW. 96-17-056, § 296-155-429, filed 8/20/96, effective 10/15/96; 94-15-096 (Order 94-07), § 296-155-429, filed 7/20/94, effective 9/20/94; 88-11-021 (Order 88-04), 296-155-429, filed 5/11/88.]

WAC 296-155-432 Maintenance of equipment. The employer shall ensure that all wiring components and utilization equipment in hazardous locations are maintained in a dust-tight, dust-ignition-proof, or explosion-proof condition, as appropriate. There shall be no loose or missing screws, gaskets, threaded connections, seals, or other impairments to a tight condition.
[Statutory Authority: Chapter 49.17 RCW. 88-11-021 (Order 88-04), § 296-155-432, filed 5/11/88.]

WAC 296-155-434 Environmental deterioration of equipment.

(1) Deteriorating agents.

(a) Unless identified for use in the operating environment, no conductors or equipment shall be located:

(i) In damp or wet locations;

(ii) Where exposed to gases, fumes, vapors, liquids, or other agents having a deteriorating effect on the conductors or equipment; or

(iii) Where exposed to excessive temperatures.

(b) Control equipment, utilization equipment, and busways approved for use in dry locations only shall be protected against damage from the weather during building construction.

(2) Protection against corrosion. Metal raceways, cable armor, boxes, cable sheathing, cabinets, elbows, couplings, fittings, supports, and support hardware shall be of materials appropriate for the environment in which they are to be installed.
[Statutory Authority: Chapter 49.17 RCW. 88-11-021 (Order 88-04), § 296-155-434, filed 5/11/88.]

WAC 296-155-437 Batteries and battery charging.

(1) General requirements.

(a) Batteries of the unsealed type shall be located in enclosures with outside vents or in well ventilated rooms and shall be arranged so as to prevent the escape of fumes, gases, or electrolyte spray into other areas.

(b) Ventilation shall be provided to ensure diffusion of the gases from the battery and to prevent the accumulation of an explosive mixture.

(c) Racks and trays shall be substantial and shall be treated to make them resistant to the electrolyte.

(d) Floors shall be of acid resistant construction unless protected from acid accumulations.

(e) Face shields, aprons, and rubber gloves shall be provided for and worn by workers handling acids or batteries.

(f) Facilities for quick drenching of the eyes and body shall be provided within 25 feet (7.62 m) of battery handling areas.

(g) Facilities shall be provided for flushing and neutralizing spilled electrolyte and for fire protection.

WAC 296-155-437 (Cont.)

(2) Charging.

(a) Battery charging installations shall be located in areas designated for that purpose.

(b) Charging apparatus shall be protected from damage by trucks.

(c) When batteries are being charged, the vent caps shall be kept in place to avoid electrolyte spray. Vent caps shall be maintained in functioning condition.

[Statutory Authority: Chapter 49.17 RCW. 88-11-021 (Order 88-04), § 296-155-437, filed 5/11/88.]

WAC 296-155-441 Applicability.

(1) Covered. WAC 296-155-441 through 296-155-459 contain installation safety requirements for electrical equipment and installations used to provide electric power and light at the jobsite. These sections apply to installations, both temporary and permanent, used on the jobsite; but these sections do not apply to existing permanent installations that were in place before the construction activity commenced.

Note: If the electrical installation is made in accordance with the National Electrical Code ANSI/NFPA 70-1984, exclusive of formal interpretations and tentative interim amendments, it will be deemed to be in compliance with WAC 296-155-444 through 296-155-459, except for WAC 296-155-447 (2)(a) and 296-155-449 (1)(b)(ii)(E), (F), (G), and (J).

(2) Not covered. WAC 296-155-441 through 296-155-459 do not cover installations used for the generation, transmission, and distribution of electric energy, including related communication, metering, control, and transformation installations. (However, these regulations do cover portable and vehicle-mounted generators used to provide power for equipment used at the jobsite.) See the National Electrical Safety Code (NESC).

[Statutory Authority: RCW 49.17.010, .040, .050. 02-12-098 (Order 00-20), § 296-155-441, filed 06/05/02, effective 08/01/02.
Statutory Authority: Chapter 49.17 RCW. 88-11-021 (Order 88-04), § 296-155-441, filed 5/11/88.]

WAC 296-155-444 General requirements.

(1) Approval. All electrical conductors and equipment shall be approved.

(2) Examination, installation, and use of equipment.

(a) Examination. The employer shall ensure that electrical equipment is free from recognized hazards that are likely to cause death or serious physical harm to employees. Safety of equipment shall be determined on the basis of the following considerations:

(i) Suitability for installation and use in conformity with the provisions of this part. Suitability of equipment for an identified purpose may be evidenced by listing, labeling, or certification for that identified purpose.

(ii) Mechanical strength and durability, including, for parts designed to enclose and protect other equipment, the adequacy of the protection thus provided.

(iii) Electrical insulation.

(iv) Heating effects under conditions of use.

(v) Arcing effects.

WAC 296-155-444 (Cont.)

(vi) Classification by type, size, voltage, current capacity, specific use.

(vii) Other factors which contribute to the practical safeguarding of employees using or likely to come in contact with the equipment.

(b) Installation and use. Listed, labeled, or certified equipment shall be installed and used in accordance with instructions included in the listing, labeling, or certification.

(3) Interrupting rating. Equipment intended to break current shall have an interrupting rating at system voltage sufficient for the current that must be interrupted.

(4) Mounting and cooling of equipment.

(a) Mounting. Electric equipment shall be firmly secured to the surface on which it is mounted. Wooden plugs driven into holes in masonry, concrete, plaster, or similar materials shall not be used.

(b) Cooling. Electrical equipment which depends upon the natural circulation of air and convection principles for cooling of exposed surfaces shall be installed so that room air flow over such surfaces is not prevented by walls or by adjacent installed equipment. For equipment designed for floor mounting, clearance between top surfaces and adjacent surfaces shall be provided to dissipate rising warm air. Electrical equipment provided with ventilating openings shall be installed so that walls or other obstructions do not prevent the free circulation of air through the equipment.

(5) Splices. Conductors shall be spliced or joined with splicing devices designed for the use or by brazing, welding, or soldering with a fusible metal or alloy. Soldered splices shall first be so spliced or joined as to be mechanically and electrically secure without solder and then soldered. All splices and joints and the free ends of conductors shall be covered with an insulation equivalent to that of the conductors or with an insulating device designed for the purpose.

(6) Arcing parts. Parts of electric equipment which in ordinary operation produce arcs, sparks, flames, or molten metal shall be enclosed or separated and isolated from all combustible material.

(7) Marking. Electrical equipment shall not be used unless the manufacturer's name, trademark, or other descriptive marking by which the organization responsible for the product may be identified is placed on the equipment and unless other markings are provided giving voltage, current, wattage, or other ratings as necessary. The marking shall be of sufficient durability to withstand the environment involved.

(8) Identification of disconnecting means and circuits. Each disconnecting means required by this part for motors and appliances shall be legibly marked to indicate its purpose, unless located and arranged so the purpose is evident. Each service, feeder, and branch circuit, at its disconnecting means or overcurrent device, shall be legibly marked to indicate its purpose, unless located and arranged so the purpose is evident. These markings shall be of sufficient durability to withstand the environment involved.

(9) Construction site. Precautions shall be taken to make any necessary open wiring inaccessible to unauthorized personnel.

(10) 600 volts, nominal, or less. This subsection applies to equipment operating at 600 volts, nominal, or less.

WAC 296-155-444 (Cont.)

(a) Working space about electric equipment. Sufficient access and working space shall be provided and maintained about all electric equipment to permit ready and safe operation and maintenance of such equipment.

(i) Working clearances. Except as required or permitted elsewhere in this part, the dimension of the working space in the direction of access to live parts operating at 600 volts or less and likely to require examination, adjustment, servicing, or maintenance while alive shall not be less than indicated in Table I-1. In addition to the dimensions shown in Table I-1, workspace shall not be less than 30 inches (762 mm) wide in front of the electric equipment. Distances shall be measured from the live parts if they are exposed, or from the enclosure front or opening if the live parts are enclosed. Walls constructed of concrete, brick, or tile are considered to be grounded. Working space is not required in back of assemblies such as dead-front switchboards or motor control centers where there are no renewable or adjustable parts such as fuses or switches on the back and where all connections are accessible from locations other than the back.

Table I-1
Working Clearances

Nominal Voltage to Ground	Minimum Clear Distance for Conditions[1]		
	(a) Feet[2]	(b) Feet[2]	(c) Feet[2]
0-150	3	3	3
151-600	3	3 1/2	4

[1] Conditions (a), (b), and (c) are as follows: (a) Exposed live parts on one side and no live or grounded parts on the other side of the working space, or exposed live parts on both sides effectively guarded by insulating material. Insulated wire or insulated busbars operating at not over 300 volts are not considered live parts. (b) Exposed live parts on one side and grounded parts on the other side. (c) Exposed live parts on both sides of the workspace not guarded provided in condition (a) with the operator between.
[2] Note: For International System of Units (S1): One foot=0.3048m.

(ii) Clear spaces. Working space required by this part shall not be used for storage. When normally enclosed live parts are exposed for inspection or servicing, the working space, if in a passageway or general open space, shall be guarded.

(iii) Access and entrance to working space. At least one entrance shall be provided to give access to the working space about electric equipment.

(iv) Front working space. Where there are live parts normally exposed on the front of switchboards or motor control centers, the working space in front of such equipment shall not be less than 3 feet (914 mm).

(v) Headroom. The minimum headroom of working spaces about service equipment, switchboards, panelboards, or motor control centers shall be 6 feet 3 inches (1.91 m).

WAC 296-155-444 (Cont.)

(b) Guarding of live parts.

(i) Except as required or permitted elsewhere in this part, live parts of electric equipment operating at 50 volts or more shall be guarded against accidental contact by cabinets or other forms of enclosures, or by any of the following means:

(A) By location in a room, vault, or similar enclosure that is accessible only to qualified persons.

(B) By partitions or screens so arranged that only qualified persons will have access to the space within reach of the live parts. Any openings in such partitions or screens shall be so sized and located that persons are not likely to come into accidental contact with the live parts or to bring conducting objects into contact with them.

(C) By location on a balcony, gallery, or platform so elevated and arranged as to exclude unqualified persons.

(D) By elevation of 8 feet (2.44 m) or more above the floor or other working surface and so installed as to exclude unqualified persons.

(ii) In locations where electric equipment would be exposed to physical damage, enclosures or guards shall be so arranged and of such strength as to prevent such damage.

(iii) Entrances to rooms and other guarded locations containing exposed live parts shall be marked with conspicuous warning signs forbidding unqualified persons to enter.

(11) Over 600 volts, nominal.

(a) General. Conductors and equipment used on circuits exceeding 600 volts, nominal, shall comply with all applicable provisions of subsections (1) through (7) of this section and with the following provisions which supplement or modify those requirements. The provisions of (b), (c), and (d) of this subsection do not apply to equipment on the supply side of the service conductors.

(b) Enclosure for electrical installations. Electrical installations in a vault, room, closet or in an area surrounded by a wall, screen, or fence, access to which is controlled by lock and key or other equivalent means, are considered to be accessible to qualified persons only. A wall, screen, or fence less than 8 feet (2.44 m) in height is not considered adequate to prevent access unless it has other features that provide a degree of isolation equivalent to an 8 foot (2.44 m) fence. The entrances to all buildings, rooms or enclosures containing exposed live parts or exposed conductors operating at over 600 volts, nominal, shall be kept locked or shall be under the observation of a qualified person at all times.

(i) Installations accessible to qualified persons only. Electrical installations having exposed live parts shall be accessible to qualified persons only and shall comply with the applicable provisions of (c) of this subsection.

(ii) Installations accessible to unqualified persons. Electrical installations that are open to unqualified persons shall be made with metal-enclosed equipment or shall be enclosed in a vault or in an area, access to which is controlled by a lock. Metal-enclosed switchgear,

WAC 296-155-444 (Cont.)

unit substations, transformers, pull boxes, connection boxes, and other similar associated equipment shall be marked with appropriate caution signs. If equipment is exposed to physical damage from vehicular traffic, guards shall be provided to prevent such damage. Ventilating or similar openings in metal-enclosed equipment shall be designed so that foreign objects inserted through these openings will be deflected from energized parts.

(c) Workspace about equipment. Sufficient space shall be provided and maintained about electric equipment to permit ready and safe operation and maintenance of such equipment. Where energized parts are exposed, the minimum clear workspace shall not be less than 6 feet 6 inches (1.98 m) high (measured vertically from the floor or platform,) or less than 3 feet (914 mm) wide (measured parallel to the equipment.) The depth shall be as required in Table I-2. The workspace shall be adequate to permit at least a ninety degree opening of doors or hinged panels.

(i) Working space. The minimum clear working space in front of electric equipment such as switchboards, control panels, switches, circuit breakers, motor controllers, relays, and similar equipment shall not be less than specified in Table I-2 unless otherwise specified in this part. Distances shall be measured from the live parts if they are exposed, or from the enclosure front or opening if the live parts are enclosed. However, working space is not required in back of equipment such as deadfront switchboards or control assemblies where there are no renewable or adjustable parts (such as fuses or switches) on the back and where all connections are accessible from locations other than the back. Where rear access is required to work on de-energized parts on the back of enclosed equipment, a minimum working space of 30 inches (762 mm) horizontally shall be provided.

Table I-2
Minimum Depth of Clear Working
Space in Front of electric Equipment

Nominal Voltage to Ground	**Minimum Clear Distance for Conditions[1]**		
	(a) Feet[2]	**(b) Feet[2]**	**(c) Feet[2]**
601 to 2,500	3	4	5
2,501 to 9,000	4	5	6
9,001 to 25,000	5	6	9
25,001 to 75kV	6	8	10
Above 75kV	8	10	12

[1] Conditions (a), (b), and (c) are as follows: (a) Exposed live parts on one side and no live or grounded parts on the other side of the working space, or exposed live parts on both sides effectively guarded by insulating materials. Insulated wire or insulated busbars operating at not over 300 volts are not considered live parts. (b) Exposed live parts on one side and grounded parts on the other side. Walls constructed of concrete, brick, or the tile are considered to be grounded surfaces. (c) Exposed live parts on both sides of the workspace (not guarded as provided in Condition (a)) with the operator between.
[2] Note: For S1 units: One foot=0.3048m.

WAC 296-155-444 (Cont.)

(ii) Lighting outlets and points of control. The lighting outlets shall be so arranged that persons changing lamps or making repairs on the lighting system will not be endangered by live parts or other equipment. The points of control shall be so located that persons are not likely to come in contact with any live part or moving part of the equipment while turning on the lights.

(iii) Elevation of unguarded live parts. Unguarded live parts above working space shall be maintained at elevations not less than specified in Table I-3.

Table I-3
Elevation of Unguarded
Energized Parts Above Working Space

Nominal Voltage to Between Phases	**Minimum Elevation**
601 to 7,500	8 feet 6 inches[1]
7,501 to 35,000	9 feet
Over 35kV	9 feet + 0.37 inches per kV above 35 kv

[1] Note: For S1 units: One inch=25.4mm, one foot=0.3048m.

(d) Entrance and access to workspace. At least one entrance not less than 24 inches (610 mm) wide and 6 feet 6 inches (1.98 m) high shall be provided to give access to the working space about electric equipment. On switchboard and control panels exceeding 48 inches (1.22 m) in width, there shall be one entrance at each end of such board where practicable. Where bare energized parts at any voltage or insulated energized parts above 600 volts are located adjacent to such entrance, they shall be guarded.

(12) Welding and cutting equipment. Welding and cutting equipment shall meet the requirements specified in Parts D and H of this chapter.

[Statutory Authority: Chapter 49.17 RCW. 93-19-142 (Order 93-04), § 296-155-444, filed 9/22/93, effective 11/1/93; 92-23-017 (Order 92-13), § 296-155-444, filed 11/10/92, effective 12/18/92; 88-11-021 (Order 88-04), § 296-155-444 filed 5/11/88.]

WAC 296-155-447 Wiring design and protection.

(1) Use and identification of grounded and grounding conductors.

(a) Identification of conductors. A conductor used as a grounded conductor shall be identifiable and distinguishable from all other conductors. A conductor used as an equipment grounding conductor shall be identifiable and distinguishable from all other conductors.

(b) Polarity of connections. No grounded conductor shall be attached to any terminal or lead so as to reverse designated polarity.

(c) Use of grounding terminals and devices. A grounding terminal or grounding-type device on a receptacle, cord connector, or attachment plug shall not be used for purposes other than grounding.

WAC 296-155-447 (Cont.)

(2) Branch circuits.

(a) Ground-fault protection.

(i) General. The employer shall use either ground-fault circuit interrupters as specified in (a)(ii) of this subsection or an assured equipment grounding conductor program as specified in (a)(iii) of this subsection to protect employees on construction sites. These requirements are in addition to any other requirements for equipment grounding conductors.

(ii) Ground-fault circuit interrupters. All 120-volt, single-phase, 15-ampere and 20-ampere receptacle outlets on construction sites, which are not a part of the permanent wiring of the building or structure and which are in use by employees, shall have approved ground-fault circuit interrupters for personnel protection. Receptacles on a two-wire, single-phase portable or vehicle-mounted generator rated not more than 5kW, where the circuit conductors of the generator are insulated from the generator frame and all other grounded surfaces, need not be protected with ground-fault circuit interrupters.

(iii) Assured equipment grounding conductor program. The employer shall establish and implement an assured equipment grounding conductor program on construction sites covering all cord sets, receptacles which are not a part of the building or structure, and equipment connected by cord and plug which are available for use or used by employees. This program shall comply with the following minimum requirements:

(A) A written description of the program, including the specific procedures adopted by the employer, shall be available at the jobsite for inspection and copying by the director and any affected employee.

(B) The employer shall designate one or more competent persons (as defined in WAC 296-155-012(4)) to implement the program, and to perform continuing tests and inspections as required.

(C) Each cord set, attachment cap, plug and receptacle of cord sets, and any equipment connected by cord and plug, except cord sets and receptacles which are fixed and not exposed to damage, shall be visually inspected before each day's use for external defects, such as deformed or missing pins or insulation damage, and for indications of possible internal damage. Equipment found damaged or defective shall not be used until repaired.

(D) The following tests shall be performed on all cord sets, receptacles which are not a part of the permanent wiring of the building or structure, and cord-connected and plug-connected equipment required to be grounded:

(I) All equipment grounding conductors shall be tested for continuity and shall be electrically continuous.

(II) Each receptacle and attachment cap or plug shall be tested for correct attachment of the equipment grounding conductor. The equipment grounding conductor shall be connected to its proper terminal.

(III) Each outlet receptacle, or power source shall be tested to ensure proper polarity.

WAC 296-155-447 (Cont.)

(E) All required tests shall be performed:

(I) Before first use;

(II) Before equipment is returned to service following any repairs;

(III) Before equipment is used after any incident which can be reasonably suspected to have caused damage (for example, when a cord set is run over); and

(IV) At intervals not to exceed 3 months, except that cord sets and receptacles which are fixed and not exposed to damage shall be tested at intervals not exceeding 6 months.

(F) The employer shall not make available or permit the use by employees of any equipment which has not met the requirements of (a)(iii) of this subsection.

(G) Tests performed as required in this subsection shall be recorded. This test record shall identify each receptacle, cord set, and cord-connected and plug-connected equipment that passed the test and shall indicate the last date it was tested or the interval for which it was tested. This record shall be kept by means of logs, color coding, or other effective means and shall be maintained until replaced by a more current record. The record shall be made available on the jobsite for inspection by the director and any affected employee.

(b) Outlet devices. Outlet devices shall have an ampere rating not less than the load to be served and shall comply with the following:

(i) Single receptacles. A single receptacle installed on an individual branch circuit shall have an ampere rating of not less than that of the branch circuit.

(ii) Two or more receptacles. Where connected to a branch circuit supplying two or more receptacles or outlets, receptacle ratings shall conform to the values listed in Table I-4.

(iii) Receptacles used for the connection of motors. The rating of an attachment plug or receptacle used for cord-connection and plug-connection of a motor to a branch circuit shall not exceed 15 amperes at 125 volts or 10 amperes at 250 volts if individual overload protection is omitted.

Table I-4
Receptacle Ratings for Various Size Circuits

Circuit Rating Ampheres	Receptacle Rating Ampheres
15	Not over 15
20	15 or 20
30	30
40	40 or 50
50	50

WAC 296-155-447 (Cont.)

(3) Outside conductors and lamps.

(a) 600 volts, nominal, or less. (a)(i) through (iv)(D) of this subsection apply to branch circuit, feeder, and service conductors rated 600 volts, nominal, or less and run outdoors as open conductors.

(i) Conductors on poles. Conductors supported on poles shall provide a horizontal climbing space not less than the following:

(A) Power conductors below communication conductors: 30 inches (762 mm).

(B) Power conductors alone or above communication conductors: 300 volts or less-24 inches (610 mm); more than 300 volts-30 inches (762 mm).

(C) Communication conductors below power conductors: With power conductors 300 volts or less-24 inches (610 mm); more than 300 volts-30 inches (762 mm).

(ii) Clearance from ground. Open conductors shall conform to the following minimum clearances:

(A) 10 feet (3.05 m)-above finished grade, sidewalks, or from any platform or projection from which they might be reached.

(B) 12 feet (3.66 m)-over areas subject to vehicular traffic other than truck traffic.

(C) 15 feet (4.57 m)-over areas other than those specified in (a)(ii)(D) of this subsection that are subject to truck traffic.

(D) 18 feet (5.49 m)-over public streets, alleys, roads, and driveways.

(iii) Clearance from building openings. Conductors shall have a clearance of at least 3 feet (914 mm) from windows, doors, fire escapes, or similar locations. Conductors run above the top level of a window are considered to be out of reach from that window and, therefore, do not have to be 3 feet (914 mm) away.

(iv) Clearance over roofs. Conductors above roof space accessible to employees on foot shall have a clearance from the highest point of the roof surface of not less than 8 feet (2.44 m) vertical clearance for insulated conductors, not less than 10 feet (3.05 m) vertical or diagonal clearance for covered conductors, and not less than 15 feet (4.57 m) for bare conductors, except that:

(A) Where the roof space is also accessible to vehicular traffic, the vertical clearance shall not be less than 18 feet (5.49 m); or

(B) Where the roof space is not normally accessible to employees on foot, fully insulated conductors shall have a vertical or diagonal clearance of not less than 3 feet (914 mm); or

WAC 296-155-447 (Cont.)

(C) Where the voltage between conductors is 300 volts or less and the roof has a slope of not less than 4 inches (102 mm) in 12 inches (305 mm), the clearance from roofs shall be at least 3 feet (914 mm); or

(D) Where the voltage between conductors is 300 volts or less and the conductors do not pass over more than 4 feet (1.22 m) of the overhang portion of the roof and they are terminated at a through-the-roof raceway or support, the clearance from roofs shall be at least 18 inches (457 mm).

(b) Location of outdoor lamps. Lamps for outdoor lighting shall be located below all live conductors, transformers, or other electric equipment, unless such equipment is controlled by a disconnecting means that can be locked in the open position or unless adequate clearances or other safeguards are provided for relamping operations.

(4) Services.

(a) Disconnecting means.

(i) General. Means shall be provided to disconnect all conductors in a building or other structure from the service-entrance conductors. The disconnecting means shall plainly indicate whether it is in the open or closed position and shall be installed at a readily accessible location nearest the point of entrance of the service-entrance conductors.

(ii) Simultaneous opening of poles. Each service disconnecting means shall simultaneously disconnect all ungrounded conductors.

(b) Services over 600 volts, nominal. The following additional requirements apply to services over 600 volts, nominal.

(i) Guarding. Service-entrance conductors installed as open wires shall be guarded to make them accessible only to qualified persons.

(ii) Warning signs. Signs warning of high voltage shall be posted where unauthorized employees might come in contact with live parts.

(5) Overcurrent protection.

(a) 600 volts, nominal, or less. The following requirements apply to overcurrent protection of circuits rated 600 volts, nominal, or less.

(i) Protection of conductors and equipment. Conductors and equipment shall be protected from overcurrent in accordance with their ability to safely conduct current. Conductors shall have sufficient ampacity to carry the load.

(ii) Grounded conductors. Except for motor-running overload protection, overcurrent devices shall not interrupt the continuity of the grounded conductor unless all conductors of the circuit are opened simultaneously.

WAC 296-155-447 (Cont.)

(iii) Disconnection of fuses and thermal cutouts. Except for devices provided for current-limiting on the supply side of the service disconnecting means, all cartridge fuses which are accessible to other than qualified persons and all fuses and thermal cutouts on circuits over 150 volts to ground shall be provided with disconnecting means. This disconnecting means shall be installed so that the fuse or thermal cutout can be disconnected from its supply without disrupting service to equipment and circuits unrelated to those protected by the overcurrent device.

(iv) Location in or on premises. Overcurrent devices shall be readily accessible. Overcurrent devices shall not be located where they could create an employee safety hazard by being exposed to physical damage or located in the vicinity of easily ignitible material.

(v) Arcing or suddenly moving parts. Fuses and circuit breakers shall be so located or shielded that employees will not be burned or otherwise injured by their operation.

(vi) Circuit breakers.

(A) Circuit breakers shall clearly indicate whether they are in the open (off) or closed (on) position.

(B) Where circuit breaker handles on switchboards are operated vertically rather than horizontally or rotationally, the up position of the handle shall be the closed (on) position.

(C) If used as switches in 120-volt, fluorescent lighting circuits, circuit breakers shall be marked “SWD.”

(b) Over 600 volts, nominal. Feeders and branch circuits over 600 volts, nominal, shall have short-circuit protection.

(6) Effective grounding. The path from circuits, equipment, structures, and conduit or enclosures to ground shall be permanent and continuous; have ample carrying capacity to conduct safely the currents liable to be imposed on it; and have the impedance sufficiently low to limit the potential above ground and to result in the operation of the overcurrent devices in the circuit. (a) through (k) of this subsection contain grounding requirements for systems, circuits, and equipment.

(a) Systems to be grounded. The following systems which supply premises wiring shall be grounded:

(i) Three-wire DC systems. All three-wire DC systems shall have their neutral conductor grounded.

(ii) Two-wire DC systems. Two-wire DC systems operating at over 50 volts through 300 volts between conductors shall be grounded unless they are rectifier-derived from an AC system complying with (a)(iii), (iv), and (v) of this subsection.

(iii) AC circuits, less than 50 volts. AC circuits of less than 50 volts shall be grounded if they are installed as overhead conductors outside of buildings or if they are supplied by transformers and the transformer primary supply system is ungrounded or exceeds 150 volts to ground.

WAC 296-155-447 (Cont.)

(iv) AC systems, 50 volts to 1000 volts. AC systems of 50 volts to 1000 volts shall be grounded under any of the following conditions, unless exempted by (a)(v) of this subsection:

(A) If the system can be so grounded that the maximum voltage to ground on the ungrounded conductors does not exceed 150 volts;

(B) If the system is nominally rated 480Y/277 volt, 3-phase, 4-wire in which the neutral is used as a circuit conductor;

(C) If the system is nominally rated 240/120 volt, 3-phase, 4-wire in which the midpoint of one phase is used as a circuit conductor; or

(D) If a service conductor is uninsulated.

(v) Exceptions. AC systems of 50 volts to 1000 volts are not required to be grounded if the system is separately derived and is supplied by a transformer that has a primary voltage rating less than 1000 volts, provided all of the following conditions are met:

(A) The system is used exclusively for control circuits;

(B) The conditions of maintenance and supervision assure that only qualified persons will service the installation;

(C) Continuity of control power is required; and

(D) Ground detectors are installed on the control system.

(b) Separately derived systems. Where (a) of this subsection requires grounding of wiring systems whose power is derived from generator, transformer, or converter windings and has no direct electrical connection, including a solidly connected grounded circuit conductor, to supply conductors originating in another system, (e) of this subsection shall also apply.

(c) Portable and vehicle-mounted generators.

(i) Portable generators. Under the following conditions, the frame of a portable generator need not be grounded and may serve as the grounding electrode for a system supplied by the generator:

(A) The generator supplies only equipment mounted on the generator and/or cord-connected and plug-connected equipment through receptacles mounted on the generator; and

(B) The noncurrent-carrying metal parts of equipment and the equipment grounding conductor terminals of the receptacles are bonded to the generator frame.

(ii) Vehicle-mounted generators. Under the following conditions the frame of a vehicle may serve as the grounding electrode for a system supplied by a generator located on the vehicle:

WAC 296-155-447 (Cont.)

(A) The frame of the generator is bonded to the vehicle frame; and

(B) The generator supplies only equipment located on the vehicle and/or cord-connected and plug-connected equipment through receptacles mounted on the vehicle or on the generator; and

(C) The noncurrent-carrying metal parts of equipment and the equipment grounding conductor terminals of the receptacles are bonded to the generator frame; and

(D) The system complies with all other provisions of this section.

(iii) Neutral conductor bonding. A neutral conductor shall be bonded to the generator frame if the generator is a component of a separately derived system. No other conductor need be bonded to the generator frame.

(d) Conductors to be grounded. For AC premises wiring systems the identified conductor shall be grounded.

(e) Grounding connections.

(i) Grounded system. For a grounded system, a grounding electrode conductor shall be used to connect both the equipment grounding conductor and the grounded circuit conductor to the grounding electrode. Both the equipment grounding conductor and the grounding electrode conductor shall be connected to the grounded circuit conductor on the supply side of the service disconnecting means, or on the supply side of the system disconnecting means or overcurrent devices if the system is separately derived.

(ii) Ungrounded systems. For an ungrounded service-supplied system, the equipment grounding conductor shall be connected to the grounding electrode conductor at the service equipment. For an ungrounded separately derived system, the equipment grounding conductor shall be connected to the grounding electrode conductor at, or ahead of, the system disconnecting means or overcurrent devices.

(f) Grounding path. The path to ground from circuits, equipment, and enclosures shall be permanent and continuous.

(g) Supports, enclosures, and equipment to be grounded.

(i) Supports and enclosures for conductors. Metal cable trays, metal raceways, and metal enclosures for conductors shall be grounded, except that:

(A) Metal enclosures such as sleeves that are used to protect cable assemblies from physical damage need not be grounded; and

(B) Metal enclosures for conductors added to existing installations of open wire, knob-and-tube wiring, and nonmetallic-sheathed cable need not be grounded if all of the following conditions are met:

WAC 296-155-447 (Cont.)

(I) Runs are less than 25 feet (7.62 m);

(II) Enclosures are free from probable contact with ground, grounded metal, metal laths, or other conductive materials; and

(III) Enclosures are guarded against employee contact.

(ii) Service equipment enclosures. Metal enclosures for service equipment shall be grounded.

(iii) Fixed equipment. Exposed noncurrent-carrying metal parts of fixed equipment which may become energized shall be grounded under any of the following conditions:

(A) If within 8 feet (2.44 m) vertically or 5 feet (1.52 m) horizontally of ground or grounded metal objects and subject to employee contact.

(B) If located in a wet or damp location and subject to employee contact.

(C) If in electrical contact with metal.

(D) If in a hazardous (classified) location.

(E) If supplied by a metal-clad, metal-sheathed, or grounded metal raceway wiring method.

(F) If equipment operates with any terminal at over 150 volts to ground; however, the following need not be grounded:

(I) Enclosures for switches or circuit breakers used for other than service equipment and accessible to qualified persons only;

(II) Metal frames of electrically heated appliances which are permanently and effectively insulated from ground; and

(III) The cases of distribution apparatus such as transformers and capacitors mounted on wooden poles at a height exceeding 8 feet (2.44 m) above ground or grade level.

(iv) Equipment connected by cord and plug. Under any of the conditions described in (g)(iv)(A) through (C) of this subsection, exposed noncurrent-carrying metal parts of cord-connected and plug-connected equipment which may become energized shall be grounded:

(A) If in a hazardous (classified) location (see WAC 296-155-444).

(B) If operated at over 150 volts to ground, except for guarded motors and metal frames of electrically heated appliances if the appliance frames are permanently and effectively insulated from ground.

(C) If the equipment is one of the types listed in (g)(iv)(C)(I) through (V) of this subsection. However, even though the equipment may be one of these types, it need not be grounded if it is exempted by (g)(iv)(C)(VI) of this subsection.

WAC 296-155-447 (Cont.)

(I) Hand held motor-operated tools;

(II) Cord-connected and plug-connected equipment used in damp or wet locations or by employees standing on the ground or on metal floors or working inside of metal tanks or boilers;

(III) Portable and mobile x-ray and associated equipment;

(IV) Tools likely to be used in wet and/or conductive locations; and

(V) Portable hand lamps.

(VI) Tools likely to be used in wet and/or conductive locations need not be grounded if supplied through an isolating transformer with an ungrounded secondary of not over 50 volts. Listed or labeled portable tools and appliances protected by a system of double insulation, or its equivalent, need not be grounded. If such a system is employed, the equipment shall be distinctively marked to indicate that the tool or appliance utilizes a system of double insulation.

(v) Nonelectrical equipment. The metal parts of the following nonelectrical equipment shall be grounded: Frames and tracks of electrically operated cranes; frames of nonelectrically driven elevator cars to which electric conductors are attached; hand-operated metal shifting ropes or cables of electric elevators, and metal partitions, grill work, and similar metal enclosures around equipment of over IkV between conductors.

(h) Methods of grounding equipment.

(i) With circuit conductors. Noncurrent-carrying metal parts of fixed equipment, if required to be grounded by this part, shall be grounded by an equipment grounding conductor which is contained within the same raceway, cable, or cord, or runs with or encloses the circuit conductors. For DC circuits only, the equipment grounding conductor may be run separately from the circuit conductors.

(ii) Grounding conductor. A conductor used for grounding fixed or movable equipment shall have capacity to conduct safely any fault current which may be imposed on it.

(iii) Equipment considered effectively grounded. Electric equipment is considered to be effectively grounded if it is secured to, and in electrical contact with, a metal rack or structure that is provided for its support and the metal rack or structure is grounded by the method specified for the noncurrent-carrying metal parts of fixed equipment in (h)(i) of this subsection. Metal car frames supported by metal hoisting cables attached to or running over metal sheaves or drums of grounded elevator machines are also considered to be effectively grounded.

(i) Bonding.

(i) If bonding conductors are used to assure electrical continuity, they shall have the capacity to conduct any fault current which may be imposed.

WAC 296-155-447 (Cont.)

(ii) When attaching bonding and grounding clamps or clips, a secure and positive metal-to-metal contact shall be made. Such attachments shall be made before closures are opened and material movements are started and shall not be broken until after material movements are stopped and closures are made.

(j) Made electrodes. If made electrodes are used, they shall be free from nonconductive coatings, such as paint or enamel; and, if practicable, they shall be embedded below permanent moisture level. A single electrode consisting of a rod, pipe or plate which has a resistance to ground greater than 25 ohms shall be augmented by one additional electrode installed no closer than 6 feet (1.83 m) to the first electrode.

(k) Grounding of systems and circuits of 1000 volts and over (high voltage).

(i) General. If high voltage systems are grounded, they shall comply with all applicable provisions of (a) through (j) of this subsection as supplemented and modified by (k) of this subsection.

(ii) Grounding of systems supplying portable or mobile equipment. Systems supplying portable or mobile high voltage equipment, other than substations installed on a temporary basis, shall comply with the following:

(A) Portable and mobile high voltage equipment shall be supplied from a system having its neutral grounded through an impedance. If a delta-connected high voltage system is used to supply the equipment, a system neutral shall be derived.

(B) Exposed noncurrent-carrying metal parts of portable and mobile equipment shall be connected by an equipment grounding conductor to the point at which the system neutral impedance is grounded.

(C) Ground-fault detection and relaying shall be provided to automatically deenergize any high voltage system component which has developed a ground fault. The continuity of the equipment grounding conductor shall be continuously monitored so as to de-energize automatically the high voltage feeder to the portable equipment upon loss of continuity of the equipment grounding conductor.

(D) The grounding electrode to which the portable or mobile equipment system neutral impedance is connected shall be isolated from and separated in the ground by at least 20 feet (6.1 m) from any other system or equipment grounding electrode, and there shall be no direct connection between the grounding electrodes, such as buried pipe, fence or like objects.

(iii) Grounding of equipment. All noncurrent-carrying metal parts of portable equipment and fixed equipment including their associated fences, housings, enclosures, and supporting structures shall be grounded. However, equipment which is guarded by location and isolated from ground need not be grounded. Additionally, pole-mounted distribution apparatus at a height exceeding 8 feet (2.44 m) above ground or grade level need not be grounded.

[Statutory Authority: Chapter 49.17 RCW. 93-19-142 (Order 93-04), § 296-155-447, filed 9/22/93, effective 11/1/93; 88-11-021 (Order 88-04), § 296-155-447 filed 5/11/88.]

WAC 296-155-449 Wiring methods, components, and equipment for general use.

(1) Wiring methods. The provisions of this subsection do not apply to conductors which form an integral part of equipment such as motors, controllers, motor control centers and like equipment.

(a) General requirements.

(i) Electrical continuity of metal raceways and enclosures. Metal raceways, cable armor, and other metal enclosures for conductors shall be metallically joined together into a continuous electric conductor and shall be so connected to all boxes, fittings, and cabinets as to provide effective electrical continuity.

(ii) Wiring in ducts. No wiring systems of any type shall be installed in ducts used to transport dust, loose stock or flammable vapors. No wiring system of any type shall be installed in any duct used for vapor removal or in any shaft containing only such ducts.

(iii) Receptacles for attachment plugs shall be approved, concealed contact type with a contact for extending ground continuity and shall be so designed and constructed that the plug may be pulled out without leaving any live parts exposed to accidental contact. All temporary outlet boxes shall be of a type suitable for use in wet or damp locations.

(iv) Attachment plugs or other connectors supplying equipment at more than 300 volts shall be of the skirted type or otherwise so designed that arcs will be confined.

(b) Temporary wiring.

(i) Scope. The provisions of (b) of this subsection apply to temporary electrical power and lighting wiring methods which may be of a class less than would be required for a permanent installation. Except as specifically modified in (b) of this subsection, all other requirements of this part for permanent wiring shall apply to temporary wiring installations. Temporary wiring shall be removed immediately upon completion of construction or the purpose for which the wiring was installed.

(ii) General requirements for temporary wiring.

(A) Feeders shall originate in a distribution center. The conductors shall be run as multiconductor cord or cable assemblies or within raceways; or, where not subject to physical damage, they may be run as open conductors on insulators not more than 10 feet (3.05 m) apart.

(B) Branch circuits shall originate in a power outlet or panelboard. Conductors shall be run as multiconductor cord or cable assemblies or open conductors, or shall be run in raceways. All conductors shall be protected by overcurrent devices at their ampacity. Runs of open conductors shall be located where the conductors will not be subject to physical damage, and the conductors shall be fastened at intervals not exceeding 10 feet (3.05 m). No branch-circuit conductors shall be laid on the floor. Each branch circuit that supplies receptacles or fixed equipment shall contain a separate equipment grounding conductor if the branch circuit is run as open conductors.

WAC 296-155-449 (Cont.)

(C) Receptacles shall be of the grounding type. Unless installed in a complete metallic raceway, each branch circuit shall contain a separate equipment grounding conductor, and all receptacles shall be electrically connected to the grounding conductor. Receptacles for uses other than temporary lighting shall not be installed on branch circuits which supply temporary lighting. Receptacles shall not be connected to the same ungrounded conductor of multiwire circuits which supply temporary lighting.

(D) Disconnecting switches or plug connectors shall be installed to permit the disconnection of all ungrounded conductors of each temporary circuit.

(E) All lamps for general illumination shall be protected from accidental contact or breakage. Metal-case sockets shall be grounded.

(F) Temporary lights shall be equipped with hard usage (S or SJ types) electric cords with connections and insulation maintained in safe condition. "Brewery" cord (type CBO or NB) may be substituted for hard usage cord provided it is protected from physical damages. Temporary lights shall not be suspended by their electric cords unless cords and lights are designed for this means of suspension. Splices shall retain the insulation, outer sheath properties, flexibility, and usage characteristics of the cord being spliced.

When pin-type connectors or lampholders are utilized, the area of perforations caused by lampholder removal shall be restored to the insulation capabilities of the cord.

(G) Portable electric lighting used in wet and/or other conductive locations, as for example, drums, tanks, and vessels, shall be operated at 12 volts or less. However, 120-volt lights may be used if protected by a ground-fault circuit interrupter.

(H) A box shall be used wherever a change is made to a raceway system or a cable system which is metal clad or metal sheathed.

(I) Flexible cords and cables shall be protected from damage. Sharp corners and projections shall be avoided. Flexible cords and cables may pass through doorways or other pinch points, if protection is provided to avoid damage.

(J) Extension cord sets used with portable electric tools and appliances shall be of three-wire type and shall be designed for hard or extra-hard usage. Flexible cords used with temporary and portable lights shall be designed for hard or extra-hard usage.

Note: The National Electrical Code, ANSI/NFPA 70, in Article 400, Table 400-4, lists various types of flexible cords, some of which are noted as being designed for hard or extra-hard usage. Examples of these types of flexible cords include hard service cord (types S, ST, SO, STO) and junior hard service cord (types SJ, SJO, SJT, SJTO).

(iii) Guarding. For temporary wiring over 600 volts, nominal, fencing, barriers, or other effective means shall be provided to prevent access of other than authorized and qualified personnel.

WAC 296-155-449 (Cont.)

(2) Cabinets, boxes, and fittings.

(a) Conductors entering boxes, cabinets, or fittings. Conductors entering boxes, cabinets, or fittings shall be protected from abrasion, and openings through which conductors enter shall be effectively closed. Unused openings in cabinets, boxes, and fittings shall also be effectively closed.

(b) Covers and canopies. All pull boxes, junction boxes, and fittings shall be provided with covers. If metal covers are used, they shall be grounded. In energized installations each outlet box shall have a cover, faceplate, or fixture canopy. Covers of outlet boxes having holes through which flexible cord pendants pass shall be provided with bushings designed for the purpose or shall have smooth, well-rounded surfaces on which the cords may bear.

(c) Pull and junction boxes for systems over 600 volts, nominal. In addition to other requirements in this section for pull and junction boxes, the following shall apply to these boxes for systems over 600 volts, nominal:

(i) Complete enclosure. Boxes shall provide a complete enclosure for the contained conductors or cables.

(ii) Covers. Boxes shall be closed by covers securely fastened in place. Underground box covers that weigh over 100 pounds (43.6 kg) meet this requirement. Covers for boxes shall be permanently marked “HIGH VOLTAGE.” The marking shall be on the outside of the box cover and shall be readily visible and legible.

(3) Knife switches. Single-throw knife switches shall be so connected that the blades are dead when the switch is in the open position. Single-throw knife switches shall be so placed that gravity will not tend to close them. Single-throw knife switches approved for use in the inverted position shall be provided with a locking device that will ensure that the blades remain in the open position when so set. Double-throw knife switches may be mounted so that the throw will be either vertical or horizontal. However, if the throw is vertical, a locking device shall be provided to ensure that the blades remain in the open position when so set.

(4) Switchboards and panelboards. Switchboards that have any exposed live parts shall be located in permanently dry locations and accessible only to qualified persons. Panelboards shall be mounted in cabinets, cutout boxes, or enclosures designed for the purpose and shall be dead front. However, panelboards other than the dead front externally-operable type are permitted where accessible only to qualified persons. Exposed blades of knife switches shall be dead when open.

(5) Enclosures for damp or wet locations.

(a) Cabinets, fittings, and boxes. Cabinets, cutout boxes, fittings, boxes, and panelboard enclosures in damp or wet locations shall be installed so as to prevent moisture or water from entering and accumulating within the enclosures. In wet locations the enclosures shall be weatherproof.

(b) Switches and circuit breakers. Switches, circuit breakers, and switchboards installed in wet locations shall be enclosed in weatherproof enclosures.

(6) Conductors for general wiring. All conductors used for general wiring shall be insulated unless otherwise permitted in this part. The conductor insulation shall be of a type that is suitable for the voltage, operating temperature, and location of use. Insulated conductors shall be distinguishable by appropriate color or other means as being grounded conductors, ungrounded conductors, or equipment grounding conductors.

WAC 296-155-449 (Cont.)

(7) Flexible cords and cables.

(a) Use of flexible cords and cables.

(i) Permitted uses. Flexible cords and cables shall be suitable for conditions of use and location. Flexible cords and cables shall be used only for:

(A) Pendants;

(B) Wiring of fixtures;

(C) Connection of portable lamps or appliances;

(D) Elevator cables;

(E) Wiring of cranes and hoists;

(F) Connection of stationary equipment to facilitate their frequent interchange;

(G) Prevention of the transmission of noise or vibration; or

(H) Appliances where the fastening means and mechanical connections are designed to permit removal for maintenance and repair.

(ii) Attachment plugs for cords. If used as permitted in (a)(i)(C), (F), or (H) of this subsection, the flexible cord shall be equipped with an attachment plug and shall be energized from a receptacle outlet.

(iii) Prohibited uses. Unless necessary for a use permitted in (a)(i) of this subsection, flexible cords and cables shall not be used:

(A) As a substitute for the fixed wiring of a structure;

(B) Where run through holes in walls, ceilings, or floors;

(C) Where run through doorways, windows, or similar openings, except as permitted in subsection (1)(b)(ii)(I) of this section;

(D) Where attached to building surfaces; or

(E) Where concealed behind building walls, ceilings, or floors.

(b) Identification, splices, and terminations.

(i) Identification. A conductor of a flexible cord or cable that is used as a grounded conductor or an equipment grounding conductor shall be distinguishable from other conductors.

(ii) Marking. Type SJ, SJO, SJT, SJTO, S, SO, ST, and STO cords shall not be used unless durably marked on the surface with the type designation, size, and number of conductors.

WAC 296-155-449 (Cont.)

(iii) Splices. Flexible cords shall be used only in continuous lengths without splice or tap. Hard service flexible cords No. 12 or larger may be repaired if spliced so that the splice retains the insulation, outer sheath properties, and usage characteristics of the cord being spliced.

(iv) Strain relief. Flexible cords shall be connected to devices and fittings so that strain relief is provided which will prevent pull from being directly transmitted to joints or terminal screws.

(v) Cords passing through holes. Flexible cords and cables shall be protected by bushings or fittings where passing through holes in covers, outlet boxes, or similar enclosures.

(vi) Trailing cables shall be protected from damage.

(vii) Cord and cable passing through work areas shall be covered or elevated to protect it from damage which would create a hazard to employees.

(8) Portable cables over 600 volts, nominal. Multi-conductor portable cable for use in supplying power to portable or mobile equipment at over 600 volts, nominal, shall consist of No. 8 or larger conductors employing flexible stranding. Cables operated at over 2000 volts shall be shielded for the purpose of confining the voltage stresses to the insulation. Grounding conductors shall be provided. Connectors for these cables shall be of a locking type with provisions to prevent their opening or closing while energized. Strain relief shall be provided at connections and terminations. Portable cables shall not be operated with splices unless the splices are of the permanent molded, vulcanized, or other equivalent type. Termination enclosures shall be marked with a high voltage hazard warning, and terminations shall be accessible only to authorized and qualified personnel.

(9) Fixture wires.

(a) General. Fixture wires shall be suitable for the voltage, temperature, and location of use. A fixture wire which is used as a grounded conductor shall be identified.

(b) Uses permitted. Fixture wires may be used:

(i) For installation in lighting, fixtures and in similar equipment where enclosed or protected and not subject to bending or twisting in use; or

(ii) For connecting lighting fixtures to the branch-circuit conductors supplying the fixtures.

(c) Uses not permitted. Fixture wires shall not be used as branch-circuit conductors except as permitted for Class 1 power-limited circuits.

(10) Equipment for general use.

(a) Lighting fixtures, lampholders, lamps, and receptacles.

(i) Live parts. Fixtures, lampholders, lamps, rosettes, and receptacles shall have no live parts normally exposed to employee contact. However, rosettes and cleat-type lampholders and receptacles located at least 8 feet (2.44 m) above the floor may have exposed parts.

WAC 296-155-449 (Cont.)

(ii) Support. Fixtures, lampholders, rosettes, and receptacles shall be securely supported. A fixture that weighs more than 6 pounds (2.72 kg) or exceeds 16 inches (406 mm) in any dimension shall not be supported by the screw shell of a lampholder.

(iii) Portable lamps. Portable lamps shall be wired with flexible cord and an attachment plug of the polarized or grounding type. If the portable lamp uses an Edison-based lampholder, the grounded conductor shall be identified and attached to the screw shell and the identified blade of the attachment plug. In addition, portable handlamps shall comply with the following:

(A) Metal shell, paperlined lampholders shall not be used;

(B) Handlamps shall be equipped with a handle of molded composition or other insulating material;

(C) Handlamps shall be equipped with a substantial guard attached to the lampholder or handle;

(D) Metallic guards shall be grounded by the means of an equipment grounding conductor run within the power supply cord.

(iv) Lampholders. Lampholders of the screw-shell type shall be installed for use as lampholders only. Lampholders installed in wet or damp locations shall be of the weatherproof type.

(v) Fixtures. Fixtures installed in wet or damp locations shall be identified for the purpose and shall be installed so that water cannot enter or accumulate in wireways, lampholders, or other electrical parts.

(b) Receptacles, cord connectors, and attachment plugs (caps).

(i) Configuration. Receptacles, cord connectors, and attachment plugs shall be constructed so that no receptacle or cord connector will accept an attachment plug with a different voltage or current rating than that for which the device is intended. However, a 20-ampere T-slot receptacle or cord connector may accept a 15-ampere attachment plug of the same voltage rating. Receptacles connected to circuits having different voltages, frequencies, or types of current (AC or DC) on the same premises shall be of such design that the attachment plugs used on these circuits are not interchangeable.

(ii) Damp and wet locations. A receptacle installed in a wet or damp location shall be designed for the location.

(c) Appliances.

(i) Live parts. Appliances, other than those in which the current-carrying parts at high temperatures are necessarily exposed, shall have no live parts normally exposed to employee contact.

(ii) Disconnecting means. A means shall be provided to disconnect each appliance.

(iii) Rating. Each appliance shall be marked with its rating in volts and amperes or volts and watts.

WAC 296-155-449 (Cont.)

(d) Motors. This subdivision applies to motors, motor circuits, and controllers.

(i) In sight from. If specified that one piece of equipment shall be "in sight from" another piece of equipment, one shall be visible and not more than 50 feet (15.2 m) from the other.

(ii) Disconnecting means.

(A) A disconnecting means shall be located in sight from the controller location. The controller disconnecting means for motor branch circuits over 600 volts, nominal, may be out of sight of the controller, if the controller is marked with a warning label giving the location and identification of the disconnecting means which is to be locked in the open position.

(B) The disconnecting means shall disconnect the motor and the controller from all ungrounded supply conductors and shall be so designed that no pole can be operated independently.

(C) If a motor and the driven machinery are not in sight from the controller location, the installation shall comply with one of the following conditions:

(I) The controller disconnecting means shall be capable of being locked in the open position.

(II) A manually operable switch that will disconnect the motor from its source of supply shall be placed in sight from the motor location.

(D) The disconnecting means shall plainly indicate whether it is in the open (off) or closed (on) position.

(E) The disconnecting means shall be readily accessible. If more than one disconnect is provided for the same equipment, only one need be readily accessible.

(F) An individual disconnecting means shall be provided for each motor, but a single disconnecting means may be used for a group of motors under any one of the following conditions:

(I) If a number of motors drive special parts of a single machine or piece of apparatus, such as a metal or woodworking machine, crane, or hoist;

(II) If a group of motors is under the protection of one set of branch-circuit protective devices; or

(III) If a group of motors is in a single room in sight from the location of the disconnecting means.

WAC 296-155-449 (Cont.)

(iii) Motor overload, short-circuit, and ground-fault protection. Motors, motor-control apparatus, and motor branch-circuit conductors shall be protected against overheating due to motor overloads or failure to start, and against short-circuits or ground faults. These provisions do not require overload protection that will stop a motor where a shutdown is likely to introduce additional or increased hazards, as in the case of fire pumps, or where continued operation of a motor is necessary for a safe shutdown of equipment or process and motor overload sensing devices are connected to a supervised alarm.

(iv) Protection of live parts-all voltages.

(A) Stationary motors having commutators, collectors, and brush rigging located inside of motor end brackets and not conductively connected to supply circuits operating at more than 150 volts to ground need not have such parts guarded. Exposed live parts of motors and controllers operating at 50 volts or more between terminals shall be guarded against accidental contact by any of the following:

(I) By installation in a room or enclosure that is accessible only to qualified persons;

(II) By installation on a balcony, gallery, or platform, so elevated and arranged as to exclude unqualified persons; or

(III) By elevation 8 feet (2.44 m) or more above the floor.

(B) Where live parts of motors or controllers operating at over 150 volts to ground are guarded against accidental contact only by location, and where adjustment or other attendance may be necessary during the operation of the apparatus, insulating mats or platforms shall be provided so that the attendant cannot readily touch live parts unless standing on the mats or platforms.

(e) Transformers.

(i) Application. The following subsections cover the installation of all transformers, except:

(A) Current transformers;

(B) Dry-type transformers installed as a component part of other apparatus;

(C) Transformers which are an integral part of an x-ray, high frequency, or electrostatic-coating apparatus;

(D) Transformers used with Class 2 and Class 3 circuits, sign and outline lighting, electric discharge lighting, and power-limited fire-protective signaling circuits.

(ii) Operating voltage. The operating voltage of exposed live parts of transformer installations shall be indicated by warning signs or visible markings on the equipment or structure.

(iii) Transformers over 35 kV. Dry-type, high fire point liquid-insulated, and askarel-insulated transformers installed indoors and rated over 35 kV shall be in a vault.

WAC 296-155-449 (Cont.)

(iv) Oil-insulated transformers. If they present a fire hazard to employees, oil-insulated transformers installed indoors shall be in a vault.

(v) Fire protection. Combustible material, combustible buildings and parts of buildings, fire escapes, and door and window openings shall be safeguarded from fires which may originate in oil-insulated transformers attached to or adjacent to a building or combustible material.

(vi) Transformer vaults. Transformer vaults shall be constructed so as to contain fire and combustible liquids within the vault and to prevent unauthorized access. Locks and latches shall be so arranged that a vault door can be readily opened from the inside.

(vii) Pipes and ducts. Any pipe or duct system foreign to the vault installation shall not enter or pass through a transformer vault.

(viii) Material storage. Materials shall not be stored in transformer vaults.

(f) Capacitors.

(i) Drainage of stored charge. All capacitors, except surge capacitors or capacitors included as a component part of other apparatus, shall be provided with an automatic means of draining the stored charge and maintaining the discharged state after the capacitor is disconnected from its source of supply.

(ii) Over 600 volts. Capacitors rated over 600 volts, nominal, shall comply with the following additional requirements:

(A) Isolating or disconnecting switches (with no interrupting rating) shall be interlocked with the load interrupting device or shall be provided with prominently displayed caution signs to prevent switching load current.

(B) For series capacitors the proper switching shall be assured by use of at least one of the following:

(I) Mechanically sequenced isolating and bypass switches;

(II) Interlocks; or

(III) Switching procedure prominently displayed at the switching location.

[Statutory Authority: Chapter 49.17 RCW. 93-19-142 (Order 93-04), § 296-155-449, filed 9/22/93, effective 11/1/93; 92-23-017 (Order 92-13), § 296-155-449, filed 11/10/92, effective 12/18/92; 88-11-021 (Order 88-04), § 296-155-449, filed 5/11/88.]

WAC 296-155-452 Specific purpose equipment and installations.

(1) Cranes and hoists. This subsection applies to the installation of electric equipment and wiring used in connection with cranes, monorail hoists, hoists, and all runways.

(a) Disconnecting means.

WAC 296-155-452 (Cont.)

(i) Runway conductor disconnecting means. A readily accessible disconnecting means shall be provided between the runway contact conductors and the power supply.

(ii) Disconnecting means for cranes and monorail hoists. A disconnecting means, capable of being locked in the open position, shall be provided in the leads from the runway contact conductors or other power supply on any crane or monorail hoist.

(A) If this additional disconnecting means is not readily accessible from the crane or monorail hoist operating station, means shall be provided at the operating station to open the power circuit to all motors of the crane or monorail hoist.

(B) The additional disconnect may be omitted if a monorail hoist or hand-propelled crane bridge installation meets all of the following:

(I) The unit is floor controlled;

(II) The unit is within view of the power supply disconnecting means; and

(III) No fixed work platform has been provided for servicing the unit.

(b) Control. A limit switch or other device shall be provided to prevent the load block from passing the safe upper limit of travel of any hoisting mechanism.

(c) Clearance. The dimension of the working space in the direction of access to live parts which may require examination, adjustment, servicing, or maintenance while alive shall be a minimum of 2 feet 6 inches (762 mm). Where controls are enclosed in cabinets, the door(s) shall open at least 90 degrees or be removable, or the installation shall provide equivalent access.

(d) Grounding. All exposed metal parts of cranes, monorail hoists, hoists and accessories including pendant controls shall be metallically joined together into a continuous electrical conductor so that the entire crane or hoist will be grounded in accordance with WAC 296-155-434(6). Moving parts, other than removable accessories or attachments, having metal-to-metal bearing surfaces shall be considered to be electrically connected to each other through the bearing surfaces for grounding purposes. The trolley frame and bridge frame shall be considered as electrically grounded through the bridge and trolley wheels and its respective tracks unless conditions such as paint or other insulating materials prevent reliable metal-to-metal contact. In this case a separate bonding conductor shall be provided.

(2) Elevators, escalators, and moving walks.

(a) Disconnecting means. Elevators, escalators, and moving walks shall have a single means for disconnecting all ungrounded main power supply conductors for each unit.

(b) Control panels. If control panels are not located in the same space as the drive machine, they shall be located in cabinets with doors or panels capable of being locked closed.

(3) Electric welders-disconnecting means.

(a) Motor-generator, AC transformer, and DC rectifier arc welders. A disconnecting means shall be provided in the supply circuit for each motor-generator arc welder, and for each AC transformer and DC rectifier arc welder which is not equipped with a disconnect mounted as an integral part of the welder.

WAC 296-155-452 (Cont.)

(b) Resistance welders. A switch or circuit breaker shall be provided by which each resistance welder and its control equipment can be isolated from the supply circuit. The ampere rating of this disconnecting means shall not be less than the supply conductor ampacity.

(4) X-ray equipment.

(a) Disconnecting means.

(i) General. A disconnecting means shall be provided in the supply circuit. The disconnecting means shall be operable from a location readily accessible from the x-ray control. For equipment connected to a 120-volt branch circuit of 30 amperes or less, a grounding-type attachment plug cap and receptacle of proper rating may serve as a disconnecting means.

(ii) More than one piece of equipment. If more than one piece of equipment is operated from the same high-voltage circuit, each piece or each group of equipment as a unit shall be provided with a high-voltage switch or equivalent disconnecting means. This disconnecting means shall be constructed, enclosed, or located so as to avoid contact by employees with its live parts.

(b) Control-radiographic and fluoroscopic types. Radiographic and fluoroscopic-type equipment shall be effectively enclosed or shall have interlocks that deenergize the equipment automatically to prevent ready access to live current-carrying parts.

[Statutory Authority: Chapter 49.17 RCW. 88-11-021 (Order 88-04), § 296-155-452, filed 5/11/88.]

WAC 296-155-456 Hazardous (classified) locations.

(1) Scope. This section sets forth requirements for electric equipment and wiring in locations which are classified depending on the properties of the flammable vapors, liquids or gases, or combustible dusts or fibers which may be present therein and the likelihood that a flammable or combustible concentration or quantity is present. Each room, section or area shall be considered individually in determining its classification. These hazardous (classified) locations are assigned six designations as follows: Class I, Division 1; Class I, Division 2; Class II, Division 1; Class II, Division 2; Class III, Division 1; Class III, Division 2. For definitions of these locations see WAC 296-155-428. All applicable requirements in this part apply to all hazardous (classified) locations, unless modified by provisions of this section.

(a) All components and utilization equipment used in a hazardous location shall be chosen from among those listed by a nationally recognized testing laboratory, such as Underwriters' Laboratories, Inc., or Factory Mutual Engineering Corp., except custom-made components and utilization equipment.

(b) Equipment approved for a specific hazardous location shall not be installed or intermixed with equipment approved for another specific hazardous location.

(2) Electrical installations. Equipment, wiring methods, and installations of equipment in hazardous (classified) locations shall be approved as intrinsically safe or approved for the hazardous (classified) location or safe for the hazardous (classified) location. Requirements for each of these options are as follows:

(a) Intrinsically safe. Equipment and associated wiring approved as intrinsically safe is permitted in any hazardous (classified) location included in its listing or labeling.

WAC 296-155-456 (Cont.)

(b) Approved for the hazardous (classified) location.

(i) General. Equipment shall be approved not only for the class of location but also for the ignitible or combustible properties of the specific gas, vapor, dust, or fiber that will be present.

Note: NFPA 70, the National Electrical Code, lists or defines hazardous gases, vapors, and dusts by "groups" characterized by their ignitible or combustible properties.

(ii) Marking. Equipment shall not be used unless it is marked to show the class, group, and operating temperature or temperature range, based on operation in a 40°C ambient, for which it is approved. The temperature marking shall not exceed the ignition temperature of the specific gas, vapor, or dust to be encountered. However, the following provisions modify this marking requirement for specific equipment:

(A) Equipment of the nonheat-producing type (such as junction boxes, conduit, and fitting) and equipment of the heat-producing type having a maximum temperature of not more than 100°C (212°F) need not have a marked operating temperature or temperature range.

(B) Fixed lighting fixtures marked for use only in Class I, Division 2 locations need not be marked to indicate the group.

(C) Fixed general-purpose equipment in Class I locations, other than lighting fixtures, which is acceptable for use in Class I, Division 2 locations need not be marked with the class, group, division, or operating temperature.

(D) Fixed dust-tight equipment, other than lighting fixtures, which is acceptable for use in Class II, Division 2 and Class III locations need not be marked with the class, group, division, or operating temperature.

(c) Safe for the hazardous (classified) location. Equipment which is safe for the location shall be of a type and design which the employer demonstrates will provide protection from the hazards arising from the combustibility and flammability of vapors, liquids, gases, dusts, or fibers.

Note: The National Electrical Code, NFPA 70, contains guidelines for determining the type and design of equipment and installations which will meet this requirement. The guidelines of this document address electric wiring, equipment, and systems installed in hazardous (classified) locations and contain specific provisions for the following: Wiring methods, wiring connections, conductor insulation, flexible cords, sealing and drainage, transformers, capacitors, switches, circuit breakers, fuses, motor controllers, receptacles, attachment plugs, meters, relays, instruments, resistors, generators, motors, lighting fixtures, storage battery charging equipment, electric cranes, electric hoists and similar equipment, utilization equipment, signaling systems, alarm systems, remote control systems, local loud speaker and communication systems, ventilation piping, live parts, lightning surge protection, and grounding. Compliance with these guidelines will constitute one means, but not the only means, of compliance with this subsection.

(3) Conduits. All conduits shall be threaded and shall be made wrench-tight. Where it is impractical to make a threaded joint tight, a bonding jumper shall be utilized.

[Statutory Authority: Chapter 49.17 RCW. 88-11-021 (Order 88-04), § 296-155-456, filed 5/11/88.]

WAC 296-155-459 Special systems.

(1) Systems over 600 volts, nominal. (a) through (d) of this subsection contain general requirements for all circuits and equipment operated at over 600 volts.

(a) Wiring methods for fixed installations.

(i) Above ground. Above-ground conductors shall be installed in rigid metal conduit, in intermediate metal conduit, in cable trays, in cablebus, in other suitable raceways, or as open runs of metal-clad cable designed for the use and purpose. However, open runs of nonmetallic-sheathed cable or of bare conductors or busbars may be installed in locations which are accessible only to qualified persons. Metallic shielding components, such as tapes, wires, or braids for conductors, shall be grounded. Open runs of insulated wires and cables having a bare lead sheath or a braided outer covering shall be supported in a manner designed to prevent physical damage to the braid or sheath.

(ii) Installations emerging from the ground. Conductors emerging from the ground shall be enclosed in raceways. Raceways installed on poles shall be of rigid metal conduit, intermediate metal conduit, PVC schedule 80 or equivalent extending from the ground line up to a point 8 feet (2.44 m) above finished grade. Conductors entering a building shall be protected by an enclosure from the ground line to the point of entrance. Metallic enclosures shall be grounded.

(b) Interrupting and isolating devices.

(i) Circuit breakers. Circuit breakers located indoors shall consist of metal-enclosed or fire-resistant, cell-mounted units. In locations accessible only to qualified personnel, open mounting of circuit breakers is permitted. A means of indicating the open and closed position of circuit breakers shall be provided.

(ii) Fused cutouts. Fused cutouts installed in buildings or transformer vaults shall be of a type identified for the purpose. They shall be readily accessible for fuse replacement.

(iii) Equipment isolating means. A means shall be provided to completely isolate equipment for inspection and repairs. Isolating means which are not designed to interrupt the load current of the circuit shall be either interlocked with a circuit interrupter or provided with a sign warning against opening them under load.

(c) Mobile and portable equipment.

(i) Power cable connections to mobile machines. A metallic enclosure shall be provided on the mobile machine for enclosing the terminals of the power cable. The enclosure shall include provisions for a solid connection for the ground wire(s) terminal to ground effectively the machine frame. The method of cable termination used shall prevent any strain or pull on the cable from stressing the electrical connections. The enclosure shall have provision for locking so only authorized qualified persons may open it and shall be marked with a sign warning of the presence of energized parts.

WAC 296-155-459 (Cont.)

(ii) Guarding live parts. All energized switching and control parts shall be enclosed in effectively grounded metal cabinets or enclosures. Circuit breakers and protective equipment shall have the operating means projecting through the metal cabinet or enclosure so these units can be reset without locked doors being opened. Enclosures and metal cabinets shall be locked so that only authorized qualified persons have access and shall be marked with a sign warning of the presence of energized parts. Collector ring assemblies on revolving-type machines (shovels, draglines, etc.) shall be guarded.

(d) Tunnel installations.

(i) Application. The provisions of this item apply to installation and use of high-voltage power distribution and utilization equipment which is associated with tunnels and which is portable and/or mobile, such as substations, trailers, cars, mobile shovels, draglines, hoists, drills, dredges, compressors, pumps, conveyors, and underground excavators.

(ii) Conductors. Conductors in tunnels shall be installed in one or more of the following:

(A) Metal conduit or other metal raceway;

(B) Type MC cable; or

(C) Other suitable multiconductor cable.

Conductors shall also be so located or guarded as to protect them from physical damage. Multiconductor portable cable may supply mobile equipment. An equipment grounding conductor shall be run with circuit conductors inside the metal raceway or inside the multiconductor cable jacket. The equipment grounding conductor may be insulated or bare.

(iii) Guarding live parts. Bare terminals of transformers, switches, motor controllers, and other equipment shall be enclosed to prevent accidental contact with energized parts. Enclosures for use in tunnels shall be drip-proof, weatherproof, or submersible as required by the environmental conditions.

(iv) Disconnecting means. A disconnecting means that simultaneously opens all ungrounded conductors shall be installed at each transformer or motor location.

(v) Grounding and bonding. All nonenergized metal parts of electric equipment and metal raceways and cable sheaths shall be grounded and bonded to all metal pipes and rails at the portal and at intervals not exceeding 1000 feet (305 m) throughout the tunnel.

(2) Class 1, Class 2, and Class 3 remote control, signaling, and power-limited circuits.

(a) Classification. Class 1, Class 2, or Class 3 remote control, signaling, or power-limited circuits are characterized by their usage and electrical power limitation which differentiates them from light and power circuits. These circuits are classified in accordance with their respective voltage and power limitations as summarized in (a)(i) through (iii) of this subsection.

(i) Class 1 circuits.

(A) A Class 1 power-limited circuit is supplied from a source having a rated output of not more than 30 volts and 1000 volt-amperes.

WAC 296-155-459 (Cont.)

(B) A Class 1 remote control circuit or a Class 1 signaling circuit has a voltage which does not exceed 600 volts; however, the power output of the source need not be limited.

(ii) Class 2 and Class 3 circuits.

(A) Power for Class 2 and Class 3 circuits is limited either inherently (in which no overcurrent protection is required) or by a combination of a power source and overcurrent protection.

(B) The maximum circuit voltage is 150 volts AC or DC for a Class 2 inherently limited power source, and 100 volts AC or DC for a Class 3 inherently limited power source.

(C) The maximum circuit voltage is 30 volts AC and 60 volts DC for a Class 2 power source limited by overcurrent protection, and 150 volts AC or DC for a Class 3 power source limited by overcurrent protection.

(iii) Application. The maximum circuit voltages in (a)(i) and (ii) of this subsection apply to sinusoidal AC or continuous DC power sources, and where wet contact occurrence is not likely.

(b) Marking. A Class 2 or Class 3 power supply unit shall not be used unless it is durably marked where plainly visible to indicate the class of supply and its electrical rating.

(3) Communications systems.

(a) Scope. These provisions for communication systems apply to such systems as central-station-connected and noncentral-station-connected telephone circuits, radio receiving and transmitting equipment, and outside wiring for fire and burglar alarm, and similar central station systems. These installations need not comply with the provisions of WAC 296-155-444 through 296-155-459(2), except WAC 296-155-447 (3)(a)(ii) and 296-155-456.

(b) Protective devices.

(i) Circuits exposed to power conductors. Communication circuits so located as to be exposed to accidental contact with light or power conductors operating at over 300 volts shall have each circuit so exposed provided with an approved protector.

(ii) Antenna lead-ins. Each conductor of a lead-in from an outdoor antenna shall be provided with an antenna discharge unit or other means that will drain static charges from the antenna system.

(c) Conductor location.

(i) Outside of buildings.

(A) Receiving distribution lead-in or aerial-drop cables attached to buildings and lead-in conductors to radio transmitters shall be so installed as to avoid the possibility of accidental contact with electric light or power conductors.

WAC 296-155-459 (Cont.)

(B) The clearance between lead-in conductors and any lightning protection conductors shall not be less than 6 feet (1.83 m).

(ii) On poles. Where practicable, communication conductors on poles shall be located below the light or power conductors. Communications conductors shall not be attached to a crossarm that carries light or power conductors.

(iii) Inside of buildings. Indoor antennas, lead-ins, and other communication conductors attached as open conductors to the inside of buildings shall be located at least 2 inches (50.8 mm) from conductors of any light or power or Class 1 circuits unless a special and equally protective method of conductor separation is employed.

(d) Equipment location. Outdoor metal structures supporting antennas, as well as self-supporting antennas such as vertical rods or dipole structures, shall be located as far away from overhead conductors of electric light and power circuits of over 150 volts to ground as necessary to avoid the possibility of the antenna or structure falling into or making accidental contact with such circuits.

(e) Grounding.

(i) Lead-in conductors. If exposed to contact with electric light or power conductors, the metal sheath of aerial cables entering buildings shall be grounded or shall be interrupted close to the entrance to the building by an insulating joint or equivalent device. Where protective devices are used, they shall be grounded.

(ii) Antenna structures. Masts and metal structures supporting antennas shall be permanently and effectively grounded without splice or connection in the grounding conductor.

(iii) Equipment enclosures. Transmitters shall be enclosed in a metal frame or grill or separated from the operating space by a barrier, all metallic parts of which are effectively connected to ground. All external metal handles and controls accessible to the operating personnel shall be effectively grounded. Unpowered equipment and enclosures shall be considered grounded where connected to an attached coaxial cable with an effectively grounded metallic shield.

[Statutory Authority: Chapter 49.17 RCW. 93-19-142 (Order 93-04), § 296-155-459, filed 9/22/93, effective 11/1/93; 88-11-021 (Order 88-04), § 296-155-459, filed 5/11/88.]

WAC 296-155-462 Definitions applicable to this part. The definitions given in this section apply to the terms used in Part I. The definitions given here for “approved” and “qualified person” apply, instead of the definitions given in WAC 296-155-012, to the use of these terms in Part I.

(1) **“Acceptable.”** An installation or equipment is acceptable to the director, and approved within the meaning of this Part I:

(a) If it is accepted, certified, listed, labeled, or otherwise determined to be safe by a qualified testing laboratory capable of determining the suitability of materials and equipment for installation and use in accordance with this standard; or

(b) With respect to an installation or equipment of a kind which no qualified testing laboratory accepts, certifies, lists, labels, or determines to be safe, if it is inspected or tested by another state agency, or by a federal, municipal, or other local authority responsible for enforcing occupational safety provisions of the National Electrical Code, and found in compliance with those provisions; or

WAC 296-155-462 (Cont.)

(c) With respect to custom-made equipment or related installations which are designed, fabricated for, and intended for use by a particular customer, if it is determined to be safe for its intended use by its manufacturer on the basis of test data which the employer keeps and makes available for inspection to the director and his/her authorized representatives.

(2) **"Accepted."** An installation is "accepted" if it has been inspected and found to be safe by a qualified testing laboratory.

(3) **"Accessible."** (As applied to wiring methods.) Capable of being removed or exposed without damaging the building structure or finish, or not permanently closed in by the structure or finish of the building. (See "concealed" and "exposed.")

(4) **"Accessible."** (As applied to equipment.) Admitting close approach; not guarded by locked doors, elevation, or other effective means. (See "readily accessible.")

(5) **"Ampacity."** The current in amperes a conductor can carry continuously under the conditions of use without exceeding its temperature rating.

(6) **"Appliances."** Utilization equipment, generally other than industrial, normally built in standardized sizes or types, which is installed or connected as a unit to perform one or more functions.

(7) **"Approved."** Approved by the director of the department of labor and industries or his/her authorized representative: Provided, however, That should a provision of this chapter state that approval by an agency or organization other than the department of labor and industries is required, such as Underwriters' Laboratories, the Bureau of Mines, or Mine Safety and Health Administration (MSHA) and the National Institute for Occupational Safety and Health (NIOSH) the provisions of WAC 296-155-006 shall apply.

(8) **"Askarel."** A generic term for a group of nonflammable synthetic chlorinated hydrocarbons used as electrical insulating media. Askarels of various compositional types are used. Under arcing conditions the gases produced, while consisting predominantly of noncombustible hydrogen chloride, can include varying amounts of combustible gases depending upon the askarel type.

(9) **"Attachment plug (plug cap) (cap)."** A device which, by insertion in a receptacle, establishes connection between the conductors of the attached flexible cord and the conductors connected permanently to the receptacle.

(10) **"Automatic."** Self-acting, operating by its own mechanism when actuated by some impersonal influence, as for example, a change in current strength, pressure, temperature, or mechanical configuration.

(11) **"Bare conductor."** See "conductor."

(12) **"Bonding."** The permanent joining of metallic parts to form an electrically conductive path which will assure electrical continuity and the capacity to conduct safely any current likely to be imposed.

(13) **"Bonding jumper."** A reliable conductor to assure the required electrical conductivity between metal parts required to be electrically connected.

(14) **"Branch circuits."** That portion of a wiring system extending beyond the final overcurrent device protecting the circuit. (A device not approved for branch circuit protection, such as thermal cutout or motor overload protective device, is not considered as the overcurrent device protecting the circuit.)

WAC 296-155-462 (Cont.)

(15) **"Building."** A structure which stands alone or which is cut off from adjoining structures by fire walls with all openings therein protected by approved fire doors.

(16) **"Cabinet."** An enclosure designed either for surface or flush mounting, and provided with a frame, mat, or trim in which a swinging door or doors are or may be hung.

(17) **"Certified."** Equipment is "certified" if it:

(a) Has been tested and found by a qualified testing laboratory to meet applicable test standards or to be safe for use in a specified manner; and

(b) Is of a kind whose production is periodically inspected by a qualified testing laboratory. Certified equipment must bear a label, tag, or other record of certification.

(18) **"Circuit breaker."**

(a) (600 volts nominal, or less.) A device designed to open and close a circuit by nonautomatic means and to open the circuit automatically on a predetermined overcurrent without injury to itself when properly applied within its rating.

(b) (Over 600 volts, nominal.) A switching device capable of making, carrying, and breaking currents under normal circuit conditions, and also making, carrying for a specified time, and breaking currents under specified abnormal circuit conditions, such as those of short circuit.

(19) **"Class I locations."** Class I locations are those in which flammable gases or vapors are or may be present in the air in quantities sufficient to produce explosive or ignitible mixtures. Class I locations include the following:

(a) Class I, Division 1. A Class I, Division 1 location is a location:

(i) In which ignitible concentrations of flammable gases or vapors may exist under normal operating conditions; or

(ii) In which ignitible concentrations of such gases or vapors may exist frequently because of repair or maintenance operations or because of leakage; or

(iii) In which breakdown or faulty operation of equipment or processes might release ignitible concentrations of flammable gases or vapors, and might also cause simultaneous failure of electric equipment.

Note: This classification usually includes locations where volatile flammable liquids or liquefied flammable gases are transferred from one container to another; interiors of spray booths and areas in the vicinity of spraying and painting operations where volatile flammable solvents are used; locations containing open tanks or vats of volatile flammable liquids; drying rooms or compartments for the evaporation of flammable solvents; inadequately ventilated pump rooms for flammable gas or for volatile flammable liquids; and all other locations where ignitible concentrations of flammable vapors or gases are likely to occur in the course of normal operations.

WAC 296-155-462 (Cont.)

(b) Class I, Division 2. A Class I, Division 2 location is a location:

(i) In which volatile flammable liquids or flammable gases are handled, processed, or used, but in which the hazardous liquids, vapors, or gases will normally be confined within closed containers or closed systems from which they can escape only in case of accidental rupture or breakdown of such containers or systems, or in case of abnormal operation of equipment; or

(ii) In which ignitible concentrations of gases or vapors are normally prevented by positive mechanical ventilation, and which might become hazardous through failure or abnormal operations of the ventilating equipment; or

(iii) That is adjacent to a Class I, Division 1 location, and to which ignitible concentrations of gases or vapors might occasionally be communicated unless such communication is prevented by adequate positive-pressure ventilation from a source of clean air, and effective safeguards against ventilation failure are provided.

Note: This classification usually includes locations where volatile flammable liquids or flammable gases or vapors are used, but which would become hazardous only in case of an accident or of some unusual operating condition. The quantity of flammable material that might escape in case of accident, the adequacy of ventilating equipment, the total area involved, and the record of the industry or business with respect to explosions or fires are all factors that merit consideration in determining the classification and extent of each location.

Piping without valves, checks, meters, and similar devices would not ordinarily introduce a hazardous condition even though used for flammable liquids or gases. Locations used for the storage of flammable liquids or of liquefied or compressed gases in sealed containers would not normally be considered hazardous unless also subject to other hazardous conditions.

Electrical conduits and their associated enclosures separated from process fluids by a single seal or barrier are classed as a Division 2 location if the outside of the conduit and enclosures is a nonhazardous location.

(20) **"Class II locations."** Class II locations are those that are hazardous because of the presence of combustible dust. Class II locations include the following:

(a) Class II, Division 1. A Class II, Division 1 location is a location:

(i) In which combustible dust is or may be in suspension in the air under normal operating conditions, in quantities sufficient to produce explosive or ignitible mixtures; or

(ii) Where mechanical failure or abnormal operation of machinery or equipment might cause such explosive or ignitible mixtures to be produced, and might also provide a source of ignition through simultaneous failure of electric equipment, operation of protection devices, or from other causes; or

(iii) In which combustible dusts of an electrically conductive nature may be present.

WAC 296-155-462 (Cont.)

Note: Combustible dusts which are electrically nonconductive include dusts produced in the handling and processing of grain and grain products, pulverized sugar and cocoa, dried egg and milk powders, pulverized spices, starch and pastes, potato and woodflour, oil meal from beans and seed, dried hay, and other organic materials which may produce combustible dusts when processed or handled. Dusts containing magnesium or aluminum are particularly hazardous and the use of extreme caution is necessary to avoid ignition and explosion.

(b) Class II, Division 2. A Class II, Division 2 location is a location in which:

(i) Combustible dust will not normally be in suspension in the air in quantities sufficient to produce explosive or ignitible mixtures, and dust accumulations are normally insufficient to interfere with the normal operation of electrical equipment or other apparatus; or

(ii) Dust may be in suspension in the air as a result of infrequent malfunctioning of handling or processing equipment, and dust accumulations resulting therefrom may be ignitible by abnormal operation or failure of electrical equipment or other apparatus.

Note: This classification includes locations where dangerous concentrations of suspended dust would not be likely but where dust accumulations might form on or in the vicinity of electric equipment. These areas may contain equipment from which appreciable quantities of dust would escape under abnormal operating conditions or be adjacent to a Class II, Division 1 location, as described above, into which an explosive or ignitible concentration of dust may be put into suspension under abnormal operating conditions.

(21) **"Class III locations."** Class III locations are those that are hazardous because of the presence of easily ignitible fibers or flyings but in which such fibers or flyings are not likely to be in suspension in the air in quantities sufficient to produce ignitible mixtures. Class III locations include the following:

(a) Class III, Division 1. A Class III, Division 1 location is a location in which easily ignitible fibers or materials producing combustible flyings are handled, manufactured, or used.

Note: Easily ignitible fibers and flyings include rayon, cotton (including cotton linters and cotton waste), sisal or henequen, istle, jute, hemp, tow, cocoa fiber, oakum, baled waste kapok, Spanish moss, excelsior, sawdust, woodchips, and other material of similar nature.

(b) Class III, Division 2. A Class III, Division 2 location is a location in which easily ignitible fibers are stored or handled, except in process of manufacture. Collector ring. A collector ring is an assembly of slip rings for transferring electrical energy from a stationary to a rotating member.

(22) **"Collector ring."** A collector ring is an assembly of slip rings for transferring electrical energy from a stationary to a rotating member.

(23) **"Concealed."** Rendered inaccessible by the structure or finish of the building. Wires in concealed raceways are considered concealed, even though they may become accessible by withdrawing them. See "accessible. (As applied to wiring methods.)"

(24) **"Conductor."**

(a) **Bare.** A conductor having no covering or electrical insulation whatsoever.

(b) **Covered.** A conductor encased within material of composition or thickness that is not recognized as electrical insulation.

WAC 296-155-462 (Cont.)

(c) **Insulated.** A conductor encased within material of composition and thickness that is recognized as electrical insulation.

(25) **"Controller."** A device or group of devices that serves to govern, in some predetermined manner, the electric power delivered to the apparatus to which it is connected.

(26) **"Covered conductor."** See "conductor."

(27) **"Cutout."** (Over 600 volts, nominal.) An assembly of a fuse support with either a fuseholder, fuse carrier, or disconnecting blade. The fuseholder or fuse carrier may include a conducting element (fuse link), or may act as the disconnecting blade by the inclusion of a nonfusible member.

(28) **"Cutout box."** An enclosure designed for surface mounting and having swinging doors or covers secured directly to and telescoping with the walls of the box proper. (See "cabinet.")

(29) **"Damp location."** See "location."

(30) **"Dead front."** Without live parts exposed to a person on the operating side of the equipment.

(31) **"Device."** A unit of an electrical system which is intended to carry but not utilize electric energy.

(32) **"Disconnecting means."** A device, or group of devices, or other means by which the conductors of a circuit can be disconnected from their source of supply.

(33) **"Disconnecting (or isolating) switch."** (Over 600 volts, nominal.) A mechanical switching device used for isolating a circuit or equipment from a source of power.

(34) **"Dry location."** See "location."

(35) **"Enclosed."** Surrounded by a case, housing, fence or walls which will prevent persons from accidentally contacting energized parts.

(36) **"Enclosure."** The case or housing of apparatus, or the fence or walls surrounding an installation to prevent personnel from accidentally contacting energized parts, or to protect the equipment from physical damage.

(37) **"Equipment."** A general term including material, fittings, devices, appliances, fixtures, apparatus, and the like, used as a part of, or in connection with, an electrical installation.

(38) **"Equipment grounding conductor."** See "grounding conductor, equipment."

(39) **"Explosion-proof apparatus."** Apparatus enclosed in a case that is capable of withstanding an explosion of a specified gas or vapor which may occur within it and of preventing the ignition of a specified gas or vapor surrounding the enclosure by sparks, flashes, or explosion of the gas or vapor within, and which operates at such an external temperature that it will not ignite a surrounding flammable atmosphere.

(40) **"Exposed. (As applied to live parts.)"** Capable of being inadvertently touched or approached nearer than a safe distance by a person. It is applied to parts not suitably guarded, isolated, or insulated. (See "accessible" and "concealed.")

(41) **"Exposed. (As applied to wiring methods.)"** On or attached to the surface or behind panels designed to allow access. See "accessible. (As applied to wiring methods.)"

WAC 296-155-462 (Cont.)

(42) **"Exposed. (For the purposes of WAC 296-155-459(3), Communications systems.)"** Where the circuit is in such a position that in case of failure of supports or insulation, contact with another circuit may result.

(43) **"Externally operable."** Capable of being operated without exposing the operator to contact with live parts.

(44) **"Feeder."** All circuit conductors between the service equipment, or the generator switchboard of an isolated plant, and the final branch-circuit overcurrent device.

(45) **"Festoon lighting."** A string of outdoor lights suspended between two points more than 15 feet (4.57 m) apart.

(46) **"Fitting."** An accessory such as a locknut, bushing, or other part of a wiring system that is intended primarily to perform a mechanical rather than an electrical function.

(47) **"Fuse."** (Over 600 volts, nominal.) An overcurrent protective device with a circuit opening fusible part that is heated and severed by the passage of overcurrent through it. A fuse comprises all the parts that form a unit capable of performing the prescribed functions. It may or may not be the complete device necessary to connect it into an electrical circuit.

(48) **"Ground."** A conducting connection, whether intentional or accidental, between an electrical circuit or equipment and the earth, or to some conducting body that serves in place of the earth.

(49) **"Grounded."** Connected to earth or to some conducting body that serves in place of the earth.

(50) **"Grounded, effectively."** (Over 600 volts, nominal.) Permanently connected to earth through a ground connection of sufficiently low impedance and having sufficient ampacity that ground fault current which may occur cannot build up to voltages dangerous to personnel.

(51) **"Grounded conductor."** A system or circuit conductor that is intentionally grounded.

(52) **"Grounding conductor."** A conductor used to connect equipment or the grounded circuit of a wiring system to a grounding electrode or electrodes.

(53) **"Grounding conductor, equipment."** The conductor used to connect the noncurrent-carrying metal parts of equipment, raceways, and other enclosures to the system grounded conductor and/or the grounding electrode conductor at the service equipment or at the source of a separately derived system.

(54) **"Grounding electrode conductor."** The conductor used to connect the grounding electrode to the equipment grounding conductor and/or to the grounded conductor of the circuit at the service equipment or at the source of a separately derived system.

(55) **"Ground-fault circuit interrupter."** A device for the protection of personnel that functions to deenergize a circuit or portion thereof within an established period of time when a current to ground exceeds some predetermined value that is less than that required to operate the overcurrent protective device of the supply circuit.

(56) **"Guarded."** Covered, shielded, fenced, enclosed, or otherwise protected by means of suitable covers, casings, barriers, rails, screens, mats, or platforms to remove the likelihood of approach to a point of danger or contact by persons or objects.

WAC 296-155-462 (Cont.)

(57) **"Hazard."** That condition, potential or inherent, which is likely to cause injury, death, or occupational disease.

(58) **"Hoistway."** Any shaftway, hatchway, well hole, or other vertical opening or space in which an elevator or dumbwaiter is designed to operate.

(59) **"Identified (conductors or terminals)."** Identified, as used in reference to a conductor or its terminal, means that such conductor or terminal can be recognized as grounded.

(60) **"Identified (for the use)."** Recognized as suitable for the specific purpose, function, use, environment, application, etc., where described as a requirement in this standard. Suitability of equipment for a specific purpose, environment, or application is determined by a qualified testing laboratory where such identification includes labeling or listing.

(61) **"Insulated conductor."** See conductor."

(62) **"Interrupter switch."** (Over 600 volts, nominal.) A switch capable of making, carrying, and interrupting specified currents.

(63) **"Intrinsically safe equipment and associated wiring."** Equipment and associated wiring in which any spark or thermal effect, produced either normally or in specified fault conditions, is incapable, under certain prescribed test conditions, of causing ignition of a mixture of flammable or combustible material in air in its most easily ignitible concentration.

(64) **"Isolated."** Not readily accessible to persons unless special means for access are used.

(65) **"Isolated power system."** A system comprising an isolating transformer or its equivalent, a line isolation monitor, and its ungrounded circuit conductors.

(66) **"J-Box (junction box)."** An electrical sheet metal enclosure with openings for conduit or cable with sheet metal cover. The primary purpose is for joining conductors for splicing.

(67) **"Labeled."** Equipment or materials to which has been attached a label, symbol or other identifying mark of a qualified testing laboratory which indicates compliance with appropriate standards or performance in a specified manner.

(68) **"Lighting outlet."** An outlet intended for the direct connection of a lampholder, a lighting fixture, or a pendant cord terminating in a lampholder.

(69) **"Listed."** Equipment or materials included in a list published by a qualified testing laboratory whose listing states either that the equipment or material meets appropriate standards or has been tested and found suitable for use in a specified manner.

(70) **"Location."**

(a) **Damp location.** Partially protected locations under canopies, marquees, roofed open porches, and like locations, and interior locations subject to moderate degrees of moisture, such as some basements.

WAC 296-155-462 (Cont.)

(b) **Dry location.** A location not normally subject to dampness or wetness. A location classified as dry may be temporarily subject to dampness or wetness, as in the case of a building under construction.

(c) **Wet location.** Installations underground or in concrete slabs or masonry in direct contact with the earth, and locations subject to saturation with water or other liquids, such as locations exposed to weather and unprotected.

(71) **"Mobile x-ray."** X-ray equipment mounted on a permanent base with wheels and/or casters for moving while completely assembled.

(72) **"Motor control center."** An assembly of one or more enclosed sections having a common power bus and principally containing motor control units.

(73) **"Outlet."** A point on the wiring system at which current is taken to supply utilization equipment.

(74) **"Overcurrent."** Any current in excess of the rated current of equipment or the ampacity of a conductor. It may result from overload (see definition), short circuit, or ground fault. A current in excess of rating may be accommodated by certain equipment and conductors for a given set of conditions. Hence the rules for overcurrent protection are specific for particular situations.

(75) **"Overload."** Operation of equipment in excess of normal, full load rating, or of a conductor in excess of rated ampacity which, when it persists for a sufficient length of time, would cause damage or dangerous overheating. A fault, such as a short circuit or ground fault, is not an overload. (See "overcurrent.")

(76) **"Panelboard."** A single panel or group of panel units designed for assembly in the form of a single panel; including buses, automatic overcurrent devices, and with or without switches for the control of light, heat, or power circuits; designed to be placed in a cabinet or cutout box placed in or against a wall or partition and accessible only from the front. (See "switchboard.")

(77) **"Portable x-ray."** X-ray equipment designed to be hand-carried.

(78) **"Power fuse."** (Over 600 volts, nominal.) See "fuse."

(79) **"Power outlet."** An enclosed assembly which may include receptacles, circuit breakers, fuseholders, fused switches, buses and watt-hour meter mounting means; intended to serve as a means for distributing power required to operate mobile or temporarily installed equipment.

(80) **"Premises wiring system."** That interior and exterior wiring, including power, lighting, control, and signal circuit wiring together with all of its associated hardware, fittings, and wiring devices, both permanently and temporarily installed, which extends from the load end of the service drop, or load end of the service lateral conductors to the outlet(s). Such wiring does not include wiring internal to appliances, fixtures, motors, controllers, motor control centers, and similar equipment.

(81) **"Qualified person."** One familiar with the construction and operation of the equipment and the hazards involved.

(82) **"Qualified testing laboratory."** A properly equipped and staffed testing laboratory which has capabilities for and which provides the following services:

WAC 296-155-462 (Cont.)

(a) Experimental testing for safety of specified items of equipment and materials referred to in this standard to determine compliance with appropriate test standards or performance in a specified manner;

(b) Inspecting the run of such items of equipment and materials at factories for product evaluation to assure compliance with the test standards;

(c) Service-value determinations through field inspections to monitor the proper use of labels on products and with authority for recall of the label in the event a hazardous product is installed;

(d) Employing a controlled procedure for identifying the listed and/or labeled equipment or materials tested; and

(e) Rendering creditable reports or findings that are objective and without bias of the tests and test methods employed.

(83) **"Raceway."** A channel designed expressly for holding wires, cables, or busbars, with additional functions as permitted in this part. Raceways may be of metal or insulating material, and the term includes rigid metal conduit, rigid nonmetallic conduit, intermediate metal conduit, liquidtight flexible metal conduit, flexible metallic tubing, flexible metal conduit, electrical metallic tubing, underfloor raceways, cellular concrete floor raceways, cellular metal floor raceways, surface raceways, wireways, and busways.

(84) **"Readily accessible."** Capable of being reached quickly for operation, renewal, or inspections, without requiring those to whom ready access is requisite to climb over or remove obstacles or to resort to portable ladders, chairs, etc. (See "accessible.")

(85) **"Receptacle."** A receptacle is a contact device installed at the outlet for the connection of a single attachment plug. A single receptacle is a single contact device with no other contact device on the same yoke. A multiple receptacle is a single device containing two or more receptacles.

(86) **"Receptacle outlet."** An outlet where one or more receptacles are installed.

(87) **"Remote-control circuit."** Any electric circuit that controls any other circuit through a relay or an equivalent device.

(88) **"Sealable equipment."** Equipment enclosed in a case or cabinet that is provided with a means of sealing or locking so that live parts cannot be made accessible without opening the enclosure. The equipment may or may not be operable without opening the enclosure.

(89) **"Separately derived system."** A premises wiring system whose power is derived from generator, transformer, or converter windings and has no direct electrical connection, including a solidly connected grounded circuit conductor, to supply conductors originating in another system.

(90) **"Service."** The conductors and equipment for delivering energy from the electricity supply system to the wiring system of the premises served.

(91) **"Service conductors."** The supply conductors that extend from the street main or from transformers to the service equipment of the premises supplied.

WAC 296-155-462 (Cont.)

(92) **"Service drop."** The overhead service conductors from the last pole or other aerial support to and including the splices, if any, connecting to the service-entrance conductors at the building or other structure.

(93) **"Service-entrance conductors, overhead system."** The service conductors between the terminals of the service equipment and a point usually outside the building, clear of building walls, where joined by tap or splice to the service drop.

(94) **"Service-entrance conductors, underground system."** The service conductors between the terminals of the service equipment and the point of connection to the service lateral. Where service equipment is located outside the building walls, there may be no service-entrance conductors, or they may be entirely outside the building.

(95) **"Service equipment."** The necessary equipment, usually consisting of a circuit breaker or switch and fuses, and their accessories, located near the point of entrance of supply conductors to a building or other structure, or an otherwise defined area, and intended to constitute the main control and means of cutoff of the supply.

(96) **"Service raceway."** The raceway that encloses the service-entrance conductors.

(97) **"Shock hazard."** To exist at an accessible part in a circuit between the part and ground, or other accessible parts if the potential is more than 42.4 volts peak and the current through a 1,500-ohm load is more than 5 milliamperes.

(98) **"Signaling circuit."** Any electric circuit that energizes signaling equipment.

(99) **"Switchboard."** A large single panel, frame, or assembly of panels which have switches, buses, instruments, overcurrent and other protective devices mounted on the face or back or both. Switchboards are generally accessible from the rear as well as from the front and are not intended to be installed in cabinets. (See "panelboard.")

(100) **"Switches."**

(a) **General-use switch.** A switch intended for use in general distribution and branch circuits. It is rated in amperes, and it is capable of interrupting its rated current at its rated voltage.

(b) **General-use snap switch.** A form of general-use switch so constructed that it can be installed in flush device boxes or on outlet box covers, or otherwise used in conjunction with wiring systems recognized by this part.

(c) **Isolating switch.** A switch intended for isolating an electric circuit from the source of power. It has no interrupting rating, and it is intended to be operated only after the circuit has been opened by some other means.

(d) **Motor-circuit switch.** A switch, rated in horsepower, capable of interrupting the maximum operating overload current of a motor of the same horsepower rating as the switch at the rated voltage.

WAC 296-155-462 (Cont.)

(101) **"Switching devices."** (Over 600 volts, nominal.) Devices designed to close and/or open one or more electric circuits. Included in this category are circuit breakers, cutouts, disconnecting (or isolating) switches, disconnecting means, and interrupter switches.

(102) **"Transformer."** A transformer is an apparatus for converting electrical power in an a-c system at one voltage or current into electrical power at some other voltage or current without the use of rotating parts.

(103) **"Transportable x-ray."** X-ray equipment installed in a vehicle or that may readily be disassembled for transport in a vehicle.

(104) **"Utilization equipment."** Utilization equipment means equipment which utilizes electric energy for mechanical, chemical, heating, lighting, or similar useful purpose.

(105) **"Utilization system."** A utilization system is a system which provides electric power and light for employee workplaces, and includes the premises wiring system and utilization equipment.

(106) **"Ventilated."** Provided with a means to permit circulation of air sufficient to remove an excess of heat, fumes, or vapors.

(107) **"Volatile flammable liquid."** A flammable liquid having a flash point below 38°C (100°F) or whose temperature is above its flash point, or a Class II combustible liquid having a vapor pressure not exceeding 40 psia (276 kPa) at 38°C (100°F) whose temperature is above its flash point.

(108) **"Voltage."** (Of a circuit.) The greatest root-mean-square (effective) difference of potential between any two conductors of the circuit concerned.

(109) **"Voltage, nominal."** A nominal value assigned to a circuit or system for the purpose of conveniently designating its voltage class (as 120/240, 480Y/277, 600, etc.). The actual voltage at which a circuit operates can vary from the nominal within a range that permits satisfactory operation of equipment.

(110) **"Voltage to ground."** For grounded circuits, the voltage between the given conductor and that point or conductor of the circuit that is grounded; for ungrounded circuits, the greatest voltage between the given conductor and any other conductor of the circuit.

(111) **"Watertight."** So constructed that moisture will not enter the enclosure.

(112) **"Weatherproof."** So constructed or protected that exposure to the weather will not interfere with successful operation. Rainproof, raintight, or watertight equipment can fulfill the requirements for weatherproof where varying weather conditions other than wetness, such as snow, ice, dust, or temperature extremes, are not a factor.

(113) **"Wet location."** See "location."

[Statutory Authority: Chapter 49.17 RCW. 94-15-096 (Order 94-07), § 296-155-462, filed 7/20/94, effective 9/20/94; 93-19-142 (Order 93-04), § 296-155-462, filed 9/22/93, effective 11/1/93; 88-11-021 (Order 88-04), § 296-155-462, filed 5/11/88.]

PART J
STAIRWAYS AND LADDERS

WAC 296-155-475 Scope and application. This part applies to all stairways and ladders used in construction, alteration, repair (including painting and decorating), and demolition workplaces covered under chapter 296-155 WAC, and also sets forth, in specified circumstances, when ladders and stairways are required to be provided. Additional requirements for ladders used on or with scaffolds are contained in chapter 296-155 WAC, Part J-1.
[Statutory Authority: Chapter 49.17 RCW. 91-24-017 (Order 91-07), § 296-155-475, filed 11/22/91, effective 12/24/91. Statutory Authority: RCW 49.17.040 and 49.17.050. 86-03-074 (Order 86-14), § 296-155-475, filed 1/21/86; Order 76-6, § 296-155-475, filed 3/1/76; Order 74-26, § 296-155-475, filed 5/7/74, effective 6/6/74.]

WAC 296-155-47501 Definitions applicable to this part.

(1) **Cleat** means a ladder crosspiece of rectangular cross section placed on edge upon which a person may step while ascending or descending a ladder.

(2) **Double-cleat ladder** means a ladder similar in construction to a single-cleat ladder, but with a center rail to allow simultaneous two-way traffic for employees ascending or descending.

(3) **Equivalent** means alternative designs, materials, or methods that the employer can demonstrate will provide an equal or greater degree of safety for employees than the method or item specified in the standard.

(4) **Extension trestle ladder** means a self-supporting portable ladder, adjustable in length, consisting of a trestle ladder base and a vertically adjustable extension section, with a suitable means for locking the ladders together (also see trestle ladder).

(5) **Failure** means load refusal, breakage, or separation of component parts. Load refusal is the point where the structural members lose their ability to carry the loads.

(6) **Fixed ladder** means a ladder that cannot be readily moved or carried because it is an integral part of a building or structure. A side-step fixed ladder is a fixed ladder that requires a person getting off at the top to step to the side of the ladder side rails to reach the landing. A through fixed ladder is a fixed ladder that requires a person getting off at the top to step between the side rails of the ladder to reach the landing. For the purpose of this standard, slip forms and scaffolds with built in ladders permanently attached, are considered to be fixed ladders.

(7) **Handrail** means a rail used to provide employees with a handhold for support.

(8) **Individual-rung/step ladders** means ladders without a side rail or center rail support. Such ladders are made by mounting individual steps or rungs directly to the side or wall of the structure.

(9) **Job-made ladder** means a ladder that is fabricated, not commercially manufactured. This definition does not apply to any individual-rung/step ladders.

(10) **Ladder types.** For the purpose of this standard ladder types are defined by the following types:

Type IA - Extra heavy duty industrial use.

Type I - Heavy duty industrial use such as utilities and contractors.

Type II - Medium duty industrial use such as painters, offices, and light industrial use.

WAC 296-155-47501 (Cont.)

Type III - Light duty household use.

(11) **Landing** means any area such as the ground, roof, or platform that provides access/egress for a ladder.

(12) **Lower levels** means those areas to which an employee can fall from a stairway or ladder. Such areas include ground levels, floors, roofs, ramps, runways, excavations, pits, tanks, material, water, equipment, and similar surfaces. It does not include the surface from which the employee falls.

(13) **Maximum intended load** means the total load of all employees, equipment, tools, materials, transmitted loads, and other loads anticipated to be applied to a ladder component at any one time.

(14) **Nosing** means that portion of a tread projecting beyond the face of the riser immediately below.

(15) **Platform** means a walking/working surface for persons, elevated above the surrounding floor or ground.

(16) **Point of access** means all areas used by employees for work-related passage from one area or level to another. Such open areas include doorways, passageways, stairway openings, studded walls, and various other permanent or temporary openings used for such travel.

(17) **Portable ladder** means a ladder that can be readily moved or carried.

(18) **Riser height** means the vertical distance from the top of a tread to the top of the next higher tread or platform/landing or the distance from the top of a platform/landing to the top of the next higher tread or platform/landing.

(19) **Side-step fixed ladder.** See "fixed ladder."

(20) **Single-cleat ladder** means a ladder consisting of a pair of side rails, connected together by cleats, rungs, or steps.

(21) **Single-rail ladder** means a portable ladder with rungs, cleats, or steps mounted on a single rail instead of the normal two rails used on most other ladders. Single rail ladders are prohibited from use.

(22) **Special purpose ladder** means a portable ladder that represents either a modification or a combination of design or construction features in one of the general purpose types of ladders previously defined, in order to adapt the ladder to special or specific uses.

(23) **Spiral stairway** means a series of steps attached to a vertical pole and progressing upward in a winding fashion within a cylindrical space.

(24) **Stairrail system** means a vertical barrier erected along the unprotected sides and edges of a stairway to prevent employees from falling to lower levels. The top surface of a stairrail system may also be a "handrail."

(25) **Step stool (ladder type)** means a self-supporting, foldable, portable ladder, nonadjustable in length, 32 inches or less in overall size, with flat steps and without a pail shelf, designed to be climbed on the ladder top cap as well as all steps. The side rails may continue above the top cap.

(26) **Through fixed ladder.** See "fixed ladder."

WAC 296-155-47501 (Cont.)

(27) **Tread depth** means the horizontal distance from front to back of a tread (excluding nosing, if any).

(28) **Trestle ladder** means a self-supporting portable ladder, nonadjustable in length, consisting of two sections hinged at the top to form equal angles with the base. The size is designated by the length of the side rails measured along the front edge.

(29) **Unprotected sides and edges** means any side or edge (except at entrances to points of access) of a stairway where there is no stairrail system or wall 36 inches (.9 m) or more in height, and any side or edge (except at entrances to points of access) of a stairway landing, or ladder platform where there is no wall or guardrail system 39 inches (1 m) or more in height.

[Statutory Authority: Chapter 49.17 RCW. 91-24-017 (Order 91-07), § 296-155-47501, filed 11/22/91, effective 12/24/91.]

WAC 296-155-476 General requirements.

(1) A stairway or ladder shall be provided at all personnel points of access where there is a break in elevation of 19 inches (48 cm) or more, and no ramp, runway, sloped embankment, or personnel hoist is provided.

(a) Employees shall not use any spiral stairways that will not be a permanent part of the structure on which construction work is being performed.

(b) A double-cleated ladder or two or more separate ladders shall be provided when ladders are the only mean of access or exit from a working area for 25 or more employees, or when a ladder is to serve simultaneous two-way traffic.

(c) When a building or structure has only one point of access between levels, that point of access shall be kept clear to permit free passage of employees. When work must be performed or equipment must be used such that free passage at that point of access is restricted, a second point of access shall be provided and used.

(d) When a building or structure has two or more points of access between levels, at least one point of access shall be kept clear to permit free passage of employees.

(2) Employers shall provide and install all stairway and ladder fall protection systems required by this part and shall comply with all other pertinent requirements of this part before employees begin the work that necessitates the installation and use of stairways, ladders, and their respective fall protection systems.

[Statutory Authority: Chapter 49.17 RCW. 91-24-017 (Order 91-07), § 296-155-476, filed 11/22/91, effective 12/24/91.]

WAC 296-155-477 Stairways.

(1) General. The following requirements apply to all stairways as indicated:

(a) Stairways that will not be a permanent part of the structure on which construction work is being performed shall have landings of not less than 30 inches (76 cm) in the direction of travel and extend at least 22 inches (56 cm) in width at every 12 feet (3.7 m) or less of vertical rise.

(b) Stairs shall be installed between 30 deg. and 50 deg. from horizontal.

(c) In all buildings or structures two or more stories or twenty-four feet or more in height or depth, suitable permanent or temporary stairways shall be installed.

WAC 296-155-477 (Cont.)

(d) Stairways, ramps or ladders shall be provided at all points where a break in elevation of eighteen inches or more occurs in a frequently traveled passageway, entry or exit.

(e) A minimum of one stairway shall be provided for access and exit for buildings and structures to three stories or thirty-six feet; if more than three stories or thirty-six feet, two or more stairways shall be provided. Where two stairways are provided and work is being performed in the stairways, one shall be maintained clear for access between levels at all times.

(f) Wood frame buildings.

(i) The stairway to a second or higher floor shall be completed before studs are raised to support the next higher floor.

(ii) Roof and attic work areas of all buildings shall be provided with a safe means of access and egress, such as stairways, ramps or ladders.

(iii) Cleats shall not be nailed to studs to provide access to and egress from roof or other work areas.

(g) Steel frame buildings. Stairways shall extend to the uppermost floor that has been planked or decked. Ladders may be used above that point.

(h) Reinforced concrete or composite steel-Concrete buildings. Stairways shall extend to the lowermost floor upon which a complete vertical shoring system is in place. A minimum of two ladders at different locations for each floor may be used above this floor but not to exceed three floors.

(i) Riser height and tread depth shall be uniform within each flight of stairs, including any foundation structure used as one or more treads of the stairs. Variations in riser height or tread depth shall not be over 1/4-inch (0.6 cm) in any stairway system.

(j) Where doors or gates open directly on a stairway, a platform shall be provided, and the swing of the door shall not reduce the effective width of the platform to less than 20 inches (51 cm).

(k) Metal pan landings and metal pan treads, when used, shall be secured in place before filling with concrete or other material.

(l) All parts of stairways shall be free of hazardous projections, such as protruding nails.

(m) Slippery conditions on stairways shall be eliminated before the stairways are used to reach other levels.

(n) Employers are permitted to use alternating tread type stairs as long as they install, use, and maintain the stairs in accordance with manufacturer's recommendations and the following:

(i) The stair must be installed at an angle of seventy degrees or less.

WAC 296-155-477 (Cont.)

(ii) The stair must be capable of withstanding a minimum uniform load of one hundred pounds per square foot with a design factor of 1.7, and the treads must be capable of carrying a minimum concentrated load of three hundred pounds at the center of any treadspan or exterior arc with a design factor of 1.7. If the stair is intended for greater loading, construction must allow for that loading.

(iii) The stair must be equipped with a handrail on each side to assist the user in climbing or descending.

(o) Due to space limitations, when a permanent stairway must be installed at an angle above fifty degrees, such an installation (commonly called an inclined or ship's ladder) shall have treads, open risers and handrails on both sides.

(p) Where ladders are permitted for access under subsection (1) of this section, means shall be provided for employee hoisting of tools and material, such as a well wheel and hoisting line or the equivalent, so employees will have both hands free for ascending and descending ladders.

(2) Temporary service. The following requirements apply to all stairways as indicated:

(a) Except during stairway construction, foot traffic is prohibited on stairways with pan stairs where the treads and/or landings are to be filled in with concrete or other material at a later date, unless the stairs are temporarily fitted with wood or other solid material at least to the top edge of each pan. Such temporary treads and landings shall be replaced when worn below the level of the top edge of the pan.

(b) Except during stairway construction, foot traffic is prohibited on skeleton metal stairs where permanent treads and/or landings are to be installed at a later date, unless the stairs are fitted with secured temporary treads and landings long enough to cover the entire tread and/or landing area.

(c) Treads for temporary service shall be made of wood or other solid material, and shall be installed the full width and depth of the stair.

(3) Stairrails and handrails. The following requirements apply to all stairways as indicated:

(a) Stairways having four or more risers or rising more than 30 inches (76 cm), whichever is less, shall be equipped with:

(i) At least one handrail; and

(ii) One stairrail system along each unprotected side or edge.

Note: When the top edge of a stairrail system also serves as a handrail, subdivision (g) of this subsection applies.

(b) Winding and spiral stairways shall be equipped with a handrail offset sufficiently to prevent walking on those portions of the stairways where the tread width is less than 6 inches (15 cm).

(c) The height of stairrails shall be as follows:

(i) Stairrails installed after the effective date of this standard, shall be not less than 36 inches (91.5 cm) from the upper surface of the stairrail system to the surface of the tread, in line with the face of the riser at the forward edge of the tread.

WAC 296-155-477 (Cont.)

(ii) Stairrails installed before the effective date of this standard, shall be not less than 30 inches (76 cm) nor more than 34 inches (86 cm) from the upper surface of the stairrail system to the surface of the tread, in line with the face of the riser at the forward edge of the tread.

(d) Midrails, screens, mesh, intermediate vertical members, or equivalent intermediate structural members, shall be provided between the top rail of the stairrail system and the stairway steps.

(i) Midrails, when used, shall be located at a height midway between the top edge of the stairrail system and the stairway steps.

(ii) Screens or mesh, when used, shall extend from the top rail to the stairway step, and along the entire opening between top rail supports.

(iii) When intermediate vertical members, such as balusters, are used between posts, they shall be not more than 19 inches (48 cm) apart.

(iv) Other structural members, when used, shall be installed such that there are no openings in the stairrail system that are more than 19 inches (48 cm) wide.

(e) Handrails and the top rails of stairrail systems shall be capable of withstanding, without failure, a force of at least 200 pounds (890 n) applied within 2 inches (5 cm) of the top edge, in any downward or outward direction, at any point along the top edge.

(f) The height of handrails shall be not more than 37 inches (94 cm) nor less than 30 inches (76 cm) from the upper surface of the handrail to the surface of the tread, in line with the face of the riser at the forward edge of the tread.

(g) When the top edge of a stairrail system also serves as a handrail, the height of the top edge shall be not more than 37 inches (94 cm) nor less than 36 inches (91.5 cm) from the upper surface of the stairrail system to the surface of the tread, in line with the face of the riser at the forward edge of the tread.

(h) Stairrail systems and handrails shall be so surfaced as to prevent injury to employees from punctures or lacerations, and to prevent snagging of clothing.

(i) Handrails shall provide an adequate handhold for employees grasping them to avoid falling.

(j) The ends of stairrail systems and handrails shall be constructed so as not to constitute a projection hazard.

(k) Handrails that will not be a permanent part of the structure being built shall have a minimum clearance of 3 inches (8 cm) between the handrail and walls, stairrail systems, and other objects.

(l) Unprotected sides and edges of stairway landings shall be provided with guardrail systems. Guardrail system criteria are contained in chapter 296-155 WAC, Part K.

[Statutory Authority: Chapter 49.17 RCW. 96-24-051, (Order 96-05), § 296-155-477, filed 11/27/96, effective 02/01/97. 95-10-016, § 296-155-477, filed 4/25/95, effective 10/1/95; 91-24-017 (Order 91-07), § 296-155-477, filed 11/22/91, effective 12/24/91.]

WAC 296-155-480 Ladders.

(1) General. The following requirements apply to all ladders as indicated, including job-made ladders.

(a) Ladders shall be capable of supporting the following loads without failure:

(i) Each self-supporting portable ladder: At least four times the maximum intended load, except that each extra-heavy-duty type 1A metal or plastic ladder shall sustain at least 3.3 times the maximum intended load. The ability of a ladder to sustain the loads indicated in this section shall be determined by applying or transmitting the requisite load to the ladder in a downward vertical direction. Ladders built and tested in conformance with the applicable provisions of appendix A of this part will be deemed to meet this requirement.

(ii) Each portable ladder that is not self-supporting: At least four times the maximum intended load, except that each extra-heavy-duty type 1A metal or plastic ladders shall sustain at least 3.3 times the maximum intended load. The ability of a ladder to sustain the loads indicated in this section shall be determined by applying or transmitting the requisite load to the ladder in a downward vertical direction when the ladder is placed at an angle of 75 1/2 degrees from the horizontal. Ladders built and tested in conformance with the applicable provisions of appendix A will be deemed to meet this requirement.

(iii) Each fixed ladder: At least two loads of 250 pounds (114 kg) each, concentrated between any two consecutive attachments (the number and position of additional concentrated loads of 250 pounds (114 kg) each, determined from anticipated usage of the ladder, shall also be included), plus anticipated loads caused by ice buildup, winds, rigging, and impact loads resulting from the use of ladder safety devices. Each step or rung shall be capable of supporting a single concentrated load of at least 250 pounds (114 kg) applied in the middle of the step or rung. Ladders built in conformance with the applicable provisions of appendix A will be deemed to meet this requirement.

(b) Ladder rungs, cleats, and steps shall be parallel, level, and uniformly spaced when the ladder is in position for use.

(c) (i) Rungs, cleats, and steps of portable ladders (except as provided below) and fixed ladders (including individual-rung/step ladders) shall be spaced not less than 10 inches (25 cm) apart, nor more than 14 inches (36 cm) apart, as measured between centerlines of the rungs, cleats, and steps.

(ii) Rungs, cleats, and steps of step stools shall be not less than 8 inches (20 cm) apart, nor more than 12 inches (31 cm) apart, as measured 0between centerlines of the rungs, cleats, and steps.

(iii) Rungs, cleats, and steps of the base section of extension trestle ladders shall be not less than 8 inches (20 cm) nor more than 18 inches (46 cm) apart, as measured between centerlines of the rungs, cleats, and steps. The rung spacing on the extension section of the extension trestle ladder shall be not less than 6 inches (15 cm) nor more than 12 inches (31 cm), as measured between centerlines of the rungs, cleats, and steps.

(iv) Cleats on job-made ladders shall be inset into the edges of the side-rails one-half inch, or filler blocks shall be used on the side-rails between the cleats.

WAC 296-155-480 (Cont.)

(v) Cleats on job-made ladders shall be secured to each rail with three 10d common wire nails or other fasteners of equivalent strength.

(d) (i) The minimum clear distance between the sides of individual-rung/step ladders and the minimum clear distance between the side rails of other fixed ladders shall be 16 inches (41 cm).

(ii) The minimum clear distance between side rails for all portable ladders shall be 11 1/2 inches (29 cm).

(e) The rungs of individual-rung/step ladders shall be shaped such that employees' feet cannot slide off the end of the rungs.

(f) (i) The rungs and steps of fixed metal ladders manufactured after the effective date of this standard, shall be corrugated, knurled, dimpled, coated with skid-resistant material, or otherwise treated to minimize slipping.

(ii) The rungs and steps of portable metal ladders shall be corrugated, knurled, dimpled, coated with skid-resistant material, or otherwise treated to minimize slipping.

(g) Ladders shall not be tied or fastened together to provide longer sections unless they are specifically designed for such use.

(h) A metal spreader or locking device shall be provided on each stepladder to hold the front and back sections in an open position when the ladder is being used.

(i) When splicing is required to obtain a given length of side rail, the resulting side rail must be at least equivalent in strength to a one-piece side rail made of the same material.

(j) Except when portable ladders are used to gain access to fixed ladders (such as those on utility towers, billboards, and other structures where the bottom of the fixed ladder is elevated to limit access), when two or more separate ladders are used to reach an elevated work area, the ladders shall be offset with a platform or landing between the ladders. (The requirements to have guardrail systems with toeboards for falling object and overhead protection on platforms and landings are set forth in chapter 296-155 WAC, Part K.)

(k) Ladder components shall be surfaced so as to prevent injury to an employee from punctures or lacerations, and to prevent snagging of clothing.

(l) Wood ladders shall not be coated with any opaque covering, except for identification or warning labels which may be placed on one face only of a side rail.

(m) The minimum perpendicular clearance between fixed ladder rungs, cleats, and steps, and any obstruction behind the ladder shall be 7 inches (18 cm), except in the case of an elevator pit ladder, for which a minimum perpendicular clearance of 4 1/2 inches (11 cm) is required.

(n) The minimum perpendicular clearance between the center line of fixed ladder rungs, cleats, and steps, and any obstruction on the climbing side of the ladder shall be 30 inches (76 cm), except as provided in (o) of this subsection.

WAC 296-155-480 (Cont.)

(o) When unavoidable obstructions are encountered, the minimum perpendicular clearance between the centerline of fixed ladder rungs, cleats, and steps, and the obstruction on the climbing side of the ladder may be reduced to 24 inches (61 cm), provided that a deflection device is installed to guide employees around the obstruction.

(p) Through fixed ladders at their point of access/egress shall have a step-across distance of not less than 7 inches (18 cm) nor more than 12 inches (30 cm) as measured from the centerline of the steps or rungs to the nearest edge of the landing area. If the normal step-across distance exceeds 12 inches (30 cm), a landing platform shall be provided to reduce the distance to the specified limit.

(q) Fixed ladders without cages or wells shall have a clear width to the nearest permanent object of at least 15 inches (38 cm) on each side of the centerline of the ladder.

(r) Fixed ladders shall be provided with cages, wells, ladder safety devices, or self-retracting lifelines where the length of climb is less than 24 feet (7.3 m) but the top of the ladder is at a distance greater than 24 feet (7.3 m) above lower levels.

(s) Where the total length of a climb equals or exceeds 24 feet (7.3 m), fixed ladders shall be equipped with one of the following:

(i) Ladder safety devices; or

(ii) Self-retracting lifelines, and rest platforms at intervals not to exceed 150 feet (45.7 m); or

(iii) A cage or well, and multiple ladder sections, each ladder section not to exceed 50 feet (15.2 m) in length. Ladder sections shall be offset from adjacent sections, and landing platforms shall be provided at maximum intervals of 50 feet (15.2 m).

(t) Cages for fixed ladders shall conform to all of the following:

(i) Horizontal bands shall be fastened to the side rails of rail ladders, or directly to the structure, building, or equipment for individual-rung ladders;

(ii) Vertical bars shall be on the inside of the horizontal bands and shall be fastened to them;

(iii) Cages shall extend not less than 27 inches (68 cm), or more than 30 inches (76 cm) from the centerline of the step or rung (excluding the flare at the bottom of the cage), and shall not be less than 27 inches (68 cm) in width;

(iv) The inside of the cage shall be clear of projections;

(v) Horizontal bands shall be spaced not more than 4 feet (1.2 m) on center vertically;

(vi) Vertical bars shall be spaced at intervals not more than 9 1/2 inches (24 cm) on center horizontally;

(vii) The bottom of the cage shall be at a level not less than 7 feet (2.1 m) nor more than 8 feet (2.4 m) above the point of access to the bottom of the ladder. The bottom of the cage shall be flared not less than 4 inches (10 cm) all around within the distance between the bottom horizontal band and the next higher band;

WAC 296-155-480 (Cont.)

(viii) The top of the cage shall be a minimum of 42 inches (1.1 m) above the top of the platform, or the point of access at the top of the ladder, with provision for access to the platform or other point of access.

(u) Wells for fixed ladders shall conform to all of the following:

(i) They shall completely encircle the ladder;

(ii) They shall be free of projections;

(iii) Their inside face on the climbing side of the ladder shall extend not less than 27 inches (68 cm) nor more than 30 inches (76 cm) from the centerline of the step or rung;

(iv) The inside clear width shall be at least 30 inches (76 cm);

(v) The bottom of the wall on the access side shall start at a level not less than 7 feet (2.1 m) nor more than 8 feet (2.4 m) above the point of access to the bottom of the ladder.

(v) Ladder safety devices, and related support systems, for fixed ladders shall conform to all of the following:

(i) They shall be capable of withstanding without failure a drop test consisting of an 18-inch (41 cm) drop of a 500-pound (226 kg) weight;

(ii) They shall permit the employee using the device to ascend or descend without continually having to hold, push or pull any part of the device, leaving both hands free for climbing;

(iii) They shall be activated within 2 feet (.61 m) after a fall occurs, and limit the descending velocity of an employee to 7 feet/sec. (2.1 m/sec.) or less;

(iv) The connection between the carrier or lifeline and the point of attachment to the body belt or harness shall not exceed 9 inches (23 cm) in length.

(w) The mounting of ladder safety devices for fixed ladders shall conform to the following:

(i) Mountings for rigid carriers shall be attached at each end of the carrier, with intermediate mountings, as necessary, spaced along the entire length of the carrier, to provide the strength necessary to stop employees' falls.

(ii) Mountings for flexible carriers shall be attached at each end of the carrier. When the system is exposed to wind, cable guides for flexible carriers shall be installed at a minimum spacing of 25 feet (7.6 m) and maximum spacing of 40 feet (12.2 m) along the entire length of the carrier, to prevent wind damage to the system.

(iii) The design and installation of mountings and cable guides shall not reduce the design strength of the ladder.

WAC 296-155-480 (Cont.)

(x) The side rails of through or side-step fixed ladders shall extend 42 inches (1.1 m) above the top of the access level or landing platform served by the ladder. For a parapet ladder, the access level shall be the roof if the parapet is cut to permit passage through the parapet; if the parapet is continuous, the access level shall be the top of the parapet.

(y) For through-fixed-ladder extensions, the steps or rungs shall be omitted from the extension and the extension of the side rails shall be flared to provide not less than 24 inches (61 cm) nor more than 30 inches (76 cm) clearance between side rails. Where ladder safety devices are provided, the maximum clearance between side rails of the extensions shall not exceed 36 inches (91 cm).

(z) For side-step fixed ladders, the side rails and the steps or rungs shall be continuous in the extension.

(aa) Individual-rung/step ladders, except those used where their access openings are covered with manhole covers or hatches, shall extend at least 42 inches (1.1 m) above an access level or landing platform either by the continuation of the rung spacings as horizontal grab bars or by providing vertical grab bars that shall have the same lateral spacing as the vertical legs of the rungs.

(2) Use. The following requirements apply to the use of all ladders, including job-made ladders, except as otherwise indicated:

(a) When portable ladders are used for access to an upper landing surface, the ladder side rails shall extend at least 3 feet (.9 m) above the upper landing surface to which the ladder is used to gain access; or, when such an extension is not possible because of the ladder's length, then the ladder shall be secured at its top to a rigid support that will not deflect, and a grasping device, such as a grabrail, shall be provided to assist employees in mounting and dismounting the ladder. In no case shall the extension be such that ladder deflection under a load would, by itself, cause the ladder to slip off its support.

(b) Ladders shall be maintained free of oil, grease, and other slipping hazards.

(c) Ladders shall not be loaded beyond the maximum intended load for which they were built, nor beyond their manufacturer's rated capacity.

(d) Ladders shall be used only for the purpose for which they were designed.

(e) (i) Nonself-supporting ladders shall be used at an angle such that the horizontal distance from the top support to the foot of the ladder is approximately one-quarter of the working length of the ladder (the distance along the ladder between the foot and the top support).

(ii) Wood job-made ladders with spliced side rails shall be used at an angle such that the horizontal distance is one-eighth the working length of the ladder.

(iii) Fixed ladders shall be used at a pitch no greater than 90 degrees from the horizontal, as measured to the back side of the ladder.

(f) Ladders shall be used only on stable and level surfaces unless secured to prevent accidental displacement.

WAC 296-155-480 (Cont.)

(g) Ladders shall not be used on slippery surfaces unless secured or provided with slip-resistant feet to prevent accidental displacement. Slip-resistant feet shall not be used as a substitute for care in placing, lashing, or holding a ladder that is used upon slippery surfaces including, but not limited to, flat metal or concrete surfaces that are constructed so they cannot be prevented from becoming slippery.

(h) Ladders placed in any location where they can be displaced by workplace activities or traffic, such as in passageways, doorways, or driveways, shall be secured to prevent accidental displacement, or a barricade shall be used to keep the activities or traffic away from the ladder.

(i) The area around the top and bottom of ladders shall be kept clear.

(j) The top of a nonself-supporting ladder shall be placed with the two rails supported equally unless it is equipped with a single support attachment.

(k) Ladders shall not be moved, shifted, or extended while occupied.

(l) Ladders shall have nonconductive side rails if they are used where the employee or the ladder could contact exposed energized electrical equipment, except as provided in the following:

(i) Portable metal or other portable conductive ladders shall not be used on or near energized line or equipment except where nonconductive ladders present a greater electrical hazard than conductive ladders. A greater electrical hazard would be static electricity such as might be found in extra high voltage substations.

(ii) All conductive or metal ladders shall be prominently marked and identified as being conductive.

(iii) All conductive or metal ladders shall be grounded when used near energized lines or equipment.

(m) The top or top step of a stepladder shall not be used as a step.

(n) Cross-bracing on the rear section of stepladders shall not be used for climbing unless the ladders are designed and provided with steps for climbing on both front and rear sections.

(o) Ladders shall be inspected by a competent person for visible defects on a periodic basis and after any occurrence that could affect their safe use.

(p) Portable ladders with structural defects, such as, but not limited to, broken or missing rungs, cleats, or steps, broken or split rails, corroded components, or other faulty or defective components, shall either be immediately marked in a manner that readily identifies them as defective, or be tagged with “do not use” or similar language, and shall be withdrawn from service until repaired.

(q) Fixed ladders with structural defects, such as, but not limited to, broken or missing rungs, cleats, or steps, broken or split rails, or corroded components, shall be withdrawn from service until repaired. The requirement to withdraw a defective ladder from service is satisfied if the ladder is either:

WAC 296-155-480 (Cont.)

(i) Immediately tagged with "do not use" or similar language;

(ii) Marked in a manner that readily identifies it as defective;

(iii) Or blocked (such as with a plywood attachment that spans several rungs).

(r) Ladder repairs shall restore the ladder to a condition meeting its original design criteria, before the ladder is returned to use.

(s) Single-rail ladders shall not be used.

(t) When ascending or descending a ladder, the user shall face the ladder.

(u) Employees shall not ascend or descend ladders while carrying tools or materials that might interfere with the free use of both hands.

(v) When working from a ladder, the ladder shall be secured at both top and bottom.

(w) No type of work shall be performed on a ladder over twenty-five feet from the ground or floor that requires the use of both hands to perform the work, unless a safety belt is worn and the safety lanyard is secured to the ladder.

(x) Any work that requires wearing eye protection, respirators, or handling of pressure equipment shall not be performed from a ladder more than twenty-five feet above the surrounding surface.

[Statutory Authority: Chapter 49.17 RCW. 96-24-051, (Order 96-05), § 296-155-480 filed 11/27/96, effective 02/01/97. 95-10-016, § 296-155-480, filed 4/25/95, effective 10/1/95; 94-15-096 (Order 94-07), § 296-155-480, filed 7/20/94, effective 9/20/94; 91-24-017 (Order 91-07), § 296-155-480, filed 11/22/91, effective 12/24/91; 91-03-044 (Order 90-18), § 296-155-480, filed 1/10/91, effective 2/12/91; 90-09-026 (Order 90-01), § 296-155-480, filed 4/10/90, effective 5/25/90. Statutory Authority: RCW 49.17.040 and 49.17.050. 86-03-074 (Order 86-14), § 296-155-480, filed 1/21/86. Statutory Authority: RCW 49.17.040, 49.17.150, and 49.17.240. 79-08-115 (Order 79-9), § 296-155-480, filed 7/31/79; Order 76-29, § 296-155-480, filed 9/30/76; Order 76-6, § 296-155-480, filed 3/1/76; Order 74-26, § 296-155-480, filed 5/7/74, effective 6/6/74.]

WAC 296-155-48060 Training requirements. The following training provisions clarify the requirements of WAC 296-155-100 (1)(c), regarding the hazards addressed in chapter 296-155 WAC, Part J.

(1) (a) The employer shall provide a training program for each employee using ladders and stairways. The program shall enable each employee to recognize hazards related to ladders and stairways, and shall train each employee in the procedures to be followed to minimize these hazards.

(b) The employer shall ensure that each employee has been trained by a competent person in the following areas, as applicable:

(i) The nature of fall hazards in the work area;

(ii) The correct procedures for erecting, maintaining, and disassembling the fall protection systems to be used;

(iii) The proper construction, use, placement, and care in handling of all stairways and ladders;

WAC 296-155-48060 (Cont.)

(iv) The maximum intended load-carrying capacities of ladders used; and

(v) The standards contained in this part.

(2) Retraining shall be provided for each employee as necessary so that the employee maintains the understanding and knowledge acquired through compliance with this section.

[Statutory Authority: Chapter 49.17 RCW. 91-24-017 (Order 91-07), § 296-155-48060, filed 11/22/91, effective 12/24/91.]

WAC 296-155-48080 Appendix A. This appendix serves as a nonmandatory guideline to assist employers in complying with the ladder loading and strength requirements of WAC 296-155-480 (1)(a). A ladder designed and built in accordance with the applicable national consensus standards, as set forth below, will be considered to meet the requirements of WAC 296-155-480 (1)(a):

** Manufactured portable wood ladders: American National Standards Institute (ANSI) A14.1-1982--American National Standard for Ladders--Portable Wood-Safety Requirements.

** Manufactured portable metal ladders: ANSI A14.2-1982--American National Standard for Ladders--Portable Metal-Safety Requirements.

** Manufactured fixed ladders: ANSI A14.3-1984--American National Standard for Ladders-Fixed--Safety Requirements.

** Job-made ladders: ANSI A14.4-1979--Safety Requirements for Job-Made Ladders.

** Plastic ladders: ANSI A14.5-1982--American National Standard for Ladders-Portable Reinforced Plastic--Safety Requirements.

[Statutory Authority: Chapter 49.17 RCW. 91-24-017 (Order 91-07), § 296-155-48080, filed 11/22/91, effective 12/24/91.]

WAC 296-155-48090 Reserved.

[Statutory Authority: Chapter 49.17 RCW. 91-24-017 (Order 91-07), § 296-155-48090, filed 11/22/91, effective 12/24/91; Order 76-29, Table J-18 (codified as WAC 296-155-48090), filed 9/30/76; Order 76-6, Table J-18, filed 3/1/76. Formerly § 296-155-480 (part).]

PART J-1
SCAFFOLDS

WAC 296-155-481 Scope and application. This part applies to all scaffolds used in workplaces covered by this chapter. It does not apply to crane or derrick suspended personnel platforms, which are covered by chapter 296-155 WAC, Part L. The criteria for manually propelled elevating work platforms are set out exclusively in WAC 296-155-487.

The criteria for self-propelled elevating work platforms are set out exclusively in WAC 296-155-488.

The criteria for boom supported elevating work platforms are set out exclusively in WAC 296-155-489.

The criteria for aerial lifts are set out exclusively in WAC 296-155-490.

Additional requirements for forklift supported personnel platforms are set out in WAC 296-155-615 (3)(h).
[Statutory Authority: Chapter 49.17.010, .040, .050, .060 RCW. 98-05-046 (Order 97-10), § 296-155-481, filed 2/13/98, effective 4/15/98. Chapter 49.17 RCW. 91-24-017 (Order 91-07), § 296-155-481, filed 11/22/91, effective 12/24/91.]

WAC 296-155-482 Definitions applicable to this part.

"Adjustable suspension scaffold" means a suspension scaffold equipped with a hoist(s) that can be operated by an employee(s) on the scaffold.

"Bearer (putlog)" means a horizontal transverse scaffold member (which may be supported by ledgers or runners) upon which the scaffold platform rests and which joins scaffold uprights, posts, poles, and similar members.

"Boatswains' chair" means a single-point adjustable suspension scaffold consisting of a seat or sling designed to support one employee in a sitting position.

"Body belt (safety belt)" means a strap with means both for securing it about the waist and for attaching it to a lanyard or lifeline, used only in fall restraint or positioning device systems. A body belt may not be used for fall arrest.

"Body harness" means a design of straps which may be secured about the employee in a manner to distribute the fall arrest forces over at least the thighs, pelvis, waist, chest and shoulders, with means for attaching it to other components of a personal fall arrest system.

"Brace" means a rigid connection that holds one scaffold member in a fixed position with respect to another member, or to a building or structure.

"Bricklayers' square scaffold" means a supported scaffold composed of framed squares which support a platform.

"Carpenters' bracket scaffold" means a supported scaffold consisting of a platform supported by brackets attached to building or structural walls.

"Catenary scaffold" means a suspension scaffold consisting of a platform supported by two essentially horizontal and parallel ropes attached to structural members of a building or other structure. Additional support may be provided by vertical pickups.

"Chimney hoist" means a multi-point adjustable suspension scaffold used to provide access to work inside chimneys. (See "multi-point adjustable suspension scaffold.")

WAC 296-155-482 (Cont.)

"Cleat" means a structural block used at the end of a platform to prevent the platform from slipping off its supports. Cleats are also used to provide footing on sloped surfaces such as crawling boards.

"Competent person" means one who is capable of identifying existing and predictable hazards in the surroundings or working conditions which are unsanitary, hazardous, or dangerous to employees, and who has authorization to take prompt corrective measures to eliminate them.

"Continuous run scaffold (run scaffold)" means a two-point or multi-point adjustable suspension scaffold constructed using a series of interconnected braced scaffold members or supporting structures erected to form a continuous scaffold.

"Coupler" means a device for locking together the tubes of a tube and coupler scaffold.

"Crawling board (chicken ladder)" means a supported scaffold consisting of a plank with cleats spaced and secured to provide footing, for use on sloped surfaces such as roofs.

"Deceleration device" means any mechanism, such as a rope grab, rip-stitch lanyard, specially-woven lanyard, tearing or deforming lanyard, or automatic self-retracting lifeline lanyard, which dissipates a substantial amount of energy during a fall arrest or limits the energy imposed on an employee during fall arrest.

"Double pole (independent pole) scaffold" means a supported scaffold consisting of a platform(s) resting on cross beams (bearers) supported by ledgers and a double row of uprights independent of support (except ties, guys, braces) from any structure.

"Equivalent" means alternative designs, materials or methods to protect against a hazard which the employer can demonstrate will provide an equal or greater degree of safety for employees than the methods, materials or designs specified in the standard.

"Exposed power lines" means electrical power lines which are accessible to employees and which are not shielded from contact. Such lines do not include extension cords or power tool cords.

"Eye or eye splice" means a loop with or without a thimble at the end of a wire rope.

"Fabricated decking and planking" means manufactured platforms made of wood (including laminated wood, and solid sawn wood planks), metal or other materials.

"Fabricated frame scaffold (tubular welded frame scaffold)" means a scaffold consisting of a platform(s) supported on fabricated end frames with integral posts, horizontal bearers, and intermediate members.

"Failure" means load refusal, breakage, or separation of component parts. Load refusal is the point where the ultimate strength is exceeded.

"Falling object protection" means those devices, systems, structures, work practices or other means intended to prevent tools, materials, debris and other objects from falling or to deflect or contain falling objects in order to prevent them striking workers below.

"Float (ship) scaffold" means a suspension scaffold consisting of a braced platform resting on two parallel bearers and hung from overhead supports by ropes of fixed length.

WAC 296-155-482 (Cont.)

"Form scaffold" means a supported scaffold consisting of a platform supported by brackets attached to formwork.

"Guardrail system" means a vertical barrier, consisting of, but not limited to, toprails, midrails, and posts, erected to prevent employees from falling off a scaffold platform or walkway to lower levels.

"Hoist" means a manual or power-operated mechanical device to raise or lower a suspended scaffold.

"Horse scaffold" means a supported scaffold consisting of a platform supported by construction horses (saw horses). Horse scaffolds constructed of metal are sometimes known as trestle scaffolds.

"Independent pole scaffold" (see "double pole scaffold").

"Interior hung scaffold" means a suspension scaffold consisting of a platform suspended from the ceiling or roof structure by fixed length supports.

"Ladder jack scaffold" means a supported scaffold consisting of a platform resting on brackets attached to ladders.

"Ladder stand" means a mobile, fixed-size, self-supporting ladder consisting of a wide flat tread ladder in the form of stairs.

"Landing" means a platform at the end of a flight of stairs.

"Large area scaffold" means a pole scaffold, tube and coupler scaffold, systems scaffold, or fabricated frame scaffold erected over substantially the entire work area. For example: A scaffold erected over the entire floor area of a room.

"Lean-to scaffold" means a supported scaffold which is kept erect by tilting it toward and resting it against a building or structure.

"Ledger" - see runner.

"Lifeline" means a component consisting of a flexible line that connects to an anchorage at one end to hang vertically (vertical lifeline), or that connects to anchorages at both ends to stretch horizontally (horizontal lifeline), and which serves as a means for connecting other components of a personal fall arrest system to the anchorage.

"Lower levels" means areas below the level where the employee is located and to which an employee can fall. Such areas include, but are not limited to, ground levels, floors, roofs, ramps, runways, excavations, pits, tanks, materials, water, and equipment.

"Masons' adjustable supported scaffold" (see "self-contained adjustable scaffold").

"Masons' multi-point adjustable suspension scaffold" means a continuous run suspension scaffold designed and used for masonry operations.

"Maximum intended load" means the total load of all persons, equipment, tools, materials, transmitted loads, and other loads reasonably anticipated to be applied to a scaffold or scaffold component at any one time.

"Mobile scaffold" means a powered or unpowered, portable, caster or wheel-mounted supported scaffold.

WAC 296-155-482 (Cont.)

"Multi-level suspended scaffold" means a two-point or multi-point adjustable suspension scaffold with a series of platforms at various levels resting on common stirrups.

"Multi-point adjustable suspension scaffold" means a suspension scaffold consisting of a platform(s) which is suspended by more than two ropes from overhead supports and equipped with means to raise and lower the platform to desired work levels. Such scaffolds include chimney hoists.

"Needle beam scaffold" means a platform suspended from needle beams.

"Open sides and ends" means the edges of a platform that are more than 14 inches (36 cm) away horizontally from a sturdy, continuous, vertical surface (such as a building wall) or a sturdy, continuous horizontal surface (such as a floor), or a point of access. Exception: For plastering and lathing operations the horizontal threshold distance is 18 inches (46 cm).

"Outrigger" means the structural member of a supported scaffold used to increase the base width of a scaffold in order to provide support for and increased stability of the scaffold.

"Outrigger beam (thrustout)" means the structural member of a suspension scaffold or outrigger scaffold which provides support for the scaffold by extending the scaffold point of attachment to a point out and away from the structure or building.

"Outrigger scaffold" means a supported scaffold consisting of a platform resting on outrigger beams (thrustouts) projecting beyond the wall or face of the building or structure, the inboard ends of which are secured inside the building or structure.

"Overhand bricklaying" means the process of laying bricks and masonry units such that the surface of the wall to be jointed is on the opposite side of the wall from the mason, requiring the mason to lean over the wall to complete the work. It includes mason tending and electrical installation incorporated into the brick wall during the overhand bricklaying process.

"Personal fall arrest system" means a system used to arrest an employee's fall. It consists of an anchorage, connectors, and body harness and may also include a lanyard, deceleration device, lifeline, or combinations of these.

"Platform" means a work surface elevated above lower levels. Platforms can be constructed using individual wood planks, fabricated planks, fabricated decks, and fabricated platforms.

"Pole scaffold" (see definitions for "single-pole scaffold" and "double (independent) pole scaffold").

"Power operated hoist" means a hoist which is powered by other than human energy.

"Pump jack scaffold" means a supported scaffold consisting of a platform supported by vertical poles and movable support brackets.

"Putlog" - see bearer.

"Qualified" means one who, by possession of a recognized degree, certificate, or professional standing, or who by extensive knowledge, training, and experience, has successfully demonstrated his/her ability to solve or resolve problems related to the subject matter, the work, or the project.

WAC 296-155-482 (Cont.)

"Rated load" means the manufacturer's specified maximum load to be lifted by a hoist or to be applied to a scaffold or scaffold component.

"Repair bracket scaffold" means a supported scaffold consisting of a platform supported by brackets which are secured in place around the circumference or perimeter of a chimney, stack, tank or other supporting structure by one or more wire ropes placed around the supporting structure.

"Ribbon" - see runner.

"Roof bracket scaffold" means a rooftop supported scaffold consisting of a platform resting on angular-shaped supports.

"Runner (ledger or ribbon)" means the lengthwise horizontal spacing or bracing member which may support the bearers.

"Scaffold" means any temporary elevated platform (supported or suspended) and its supporting structure (including points of anchorage), used for supporting employees or materials or both.

"Self-contained adjustable scaffold" means a combination supported and suspension scaffold consisting of an adjustable platform(s) mounted on an independent supporting frame(s) not a part of the object being worked on, and which is equipped with a means to permit the raising and lowering of the platform(s). Such systems include rolling roof rigs, rolling outrigger systems, and some masons' adjustable supported scaffolds.

"Shore scaffold" means a supported scaffold which is placed against a building or structure and held in place with props.

"Single-point adjustable suspension scaffold" means a suspension scaffold consisting of a platform suspended by one rope from an overhead support and equipped with means to permit the movement of the platform to desired work levels.

"Single-pole scaffold" means a supported scaffold consisting of a platform(s) resting on bearers, the outside ends of which are supported on runners secured to a single row of posts or uprights, and the inner ends of which are supported on or in a structure or building wall.

"Stair tower (scaffold stairway/tower)" means a tower comprised of scaffold components and which contains internal stairway units and rest platforms. These towers are used to provide access to scaffold platforms and other elevated points such as floors and roofs.

"Stall load" means the load at which the prime-mover of a power-operated hoist stalls or the power to the prime-mover is automatically disconnected.

"Step, platform, and trestle ladder scaffold" means a platform resting directly on the rungs of step ladders or trestle ladders.

"Stilts" means a pair of poles or similar supports with raised footrests, used to permit walking above the ground or working surface.

"Stonesetters' multi-point adjustable suspension scaffold" means a continuous run suspension scaffold designed and used for stonesetters' operations.

WAC 296-155-482 (Cont.)

"Supported scaffold" means one or more platforms supported by outrigger beams, brackets, poles, legs, uprights, posts, frames, or similar rigid support.

"Suspension scaffold" means one or more platforms suspended by ropes or other nonrigid means from an overhead structure(s).

"System scaffold" means a scaffold consisting of posts with fixed connection points that accept runners, bearers, and diagonals that can be interconnected at predetermined levels.

"Tank builders' scaffold" means a supported scaffold consisting of a platform resting on brackets that are either directly attached to a cylindrical tank or attached to devices that are attached to such a tank.

"Toeboard" means a barrier installed at the outermost edge of a walking/working surface to prevent objects from falling onto workers below.

"Top plate bracket scaffold" means a scaffold supported by brackets that hook over or are attached to the top of a wall. This type of scaffold is similar to carpenters' bracket scaffolds and form scaffolds and is used in residential construction for setting trusses.

"Tube and coupler scaffold" means a supported or suspended scaffold consisting of a platform(s) supported by tubing, erected with coupling devices connecting uprights, braces, bearers, and runners.

"Tubular welded frame scaffold" (see "fabricated frame scaffold").

"Two-point suspension scaffold (swing stage)" means a suspension scaffold consisting of a platform supported by hangers (stirrups) suspended by two ropes from overhead supports and equipped with means to permit the raising and lowering of the platform to desired work levels.

"Unstable objects" means items whose strength, configuration, or lack of stability may allow them to become dislocated and shift and therefore may not properly support the loads imposed on them. Unstable objects do not constitute a safe base support for scaffolds, platforms, or employees. Examples include, but are not limited to, barrels, boxes, loose brick, and concrete blocks.

"Vertical pickup" means a rope used to support the horizontal rope in catenary scaffolds.

"Walkway" means a portion of a scaffold platform used only for access and not as a work level.

"Window jack scaffold" means a platform resting on a bracket or jack which projects through a window opening.
[Statutory Authority: Chapter 49.17.010, .040, .050, .060 RCW. 98-05-046 (Order 97-10), § 296-155-482, filed 2/13/98, effective 4/15/98.]

WAC 296-155-483 General requirements.

This section does not apply to manually propelled elevating work platforms, the criteria for which are set out exclusively in WAC 296-155-487.

This section does not apply to self-propelled elevating work platforms, the criteria for which are set out exclusively in WAC 296-155-488.

WAC 296-155-483 (Cont.)

This section does not apply to boom supported elevating work platforms, the criteria for which are set out exclusively in WAC 296-155-489.

This section does not apply to aerial lifts, the criteria for which are set out exclusively in WAC 296-155-490.

(1) **"Capacity"**

(a) Except as provided in (b), (c), (d), and (e) of this subsection and subsection (7) of this section, each scaffold and scaffold component shall be capable of supporting, without failure, its own weight and at least 4 times the maximum intended load applied or transmitted to it.

(b) Direct connections to roofs and floors, and counterweights used to balance adjustable suspension scaffolds, shall be capable of resisting at least 4 times the tipping moment imposed by the scaffold operating at the rated load of the hoist, or 1.5 (minimum) times the tipping moment imposed by the scaffold operating at the stall load of the hoist, whichever is greater.

(c) Each suspension rope, including connecting hardware, used on nonadjustable suspension scaffolds shall be capable of supporting, without failure, at least 6 times the maximum intended load applied or transmitted to that rope.

(d) Each suspension rope, including connecting hardware, used on adjustable suspension scaffolds shall be capable of supporting, without failure, at least 6 times the maximum intended load applied or transmitted to that rope with the scaffold operating at either the rated load of the hoist, or 2 (minimum) times the stall load of the hoist, whichever is greater.

(e) The stall load of any scaffold hoist shall not exceed 3 times its rated load.

(f) Scaffolds shall be designed by a qualified person and shall be constructed and loaded in accordance with that design. Nonmandatory Appendix A to this part contains examples of criteria that will enable an employer to comply with subsection (1) of this section.

(2) **"Scaffold platform construction."**

(a) Each platform on all working levels of scaffolds shall be fully planked or decked between the front uprights and the guardrail supports as follows:

(i) Each platform unit (e.g., scaffold plank, fabricated plank, fabricated deck, or fabricated platform) shall be installed so that the space between adjacent units and the space between the platform and the uprights is no more than 1 inch (2.5 cm) wide, except where the employer can demonstrate that a wider space is necessary (for example, to fit around uprights when side brackets are used to extend the width of the platform).

(ii) Where the employer makes the demonstration provided for in subsection (2)(a)(i) of this section, the platform shall be planked or decked as fully as possible and the remaining open space between the platform and the uprights shall not exceed 9 1/2 inches (24.1 cm).

Exception to subsection (2)(a) of this section: The requirement in subsection (2)(a) of this section to provide full planking or decking does not apply to platforms used solely as walkways or solely by employees performing scaffold erection or dismantling. In these situations, only the planking necessary to provide safe working conditions is required. Employees on those platforms shall be protected from fall hazards in accordance with subsection (7) of this section.

WAC 296-155-483 (Cont.)

(b) Except as provided in subsection (2)(b)(i) and (ii) of this section, each scaffold platform and walkway shall be at least 18 inches (46 cm) wide.

(i) Each ladder jack scaffold, top plate bracket scaffold, roof bracket scaffold, and pump jack scaffold shall be at least 12 inches (30 cm) wide. There is no minimum width requirement for boatswains' chairs.

(ii) Where scaffolds must be used in areas that the employer can demonstrate are so narrow that platforms and walkways cannot be at least 18 inches (46 cm) wide, such platforms and walkways shall be as wide as feasible, and employees on those platforms and walkways shall be protected from fall hazards by the use of guardrails and/or personal fall arrest systems.

(c) Except as provided in subsection (2)(c)(i) and (ii) of this section, the front edge of all platforms shall not be more than 14 inches (36 cm) from the face of the work, unless guardrail systems are erected along the front edge and/or personal fall arrest systems are used in accordance with subsection (7) of this section to protect employees from falling.

(i) The maximum distance from the face for outrigger scaffolds shall be 3 inches (8 cm);

(ii) The maximum distance from the face for plastering and lathing operations shall be 18 inches (46 cm).

(d) Each end of a platform, unless cleated or otherwise restrained by hooks or equivalent means, shall extend over the centerline of its support at least 6 inches (15 cm).

(e) Unless the platform is designed and installed so that the cantilevered portion of the platform is able to support employees and/or materials without tipping, or has guardrails which block employee access to the cantilevered end, the end of a platform shall not extend over its support more than:

(i) 12 inches (30 cm) for platforms 10 feet or less in length;

(ii) 18 inches (46 cm) for platforms greater than 10 feet in length.

(f) On scaffolds where scaffold planks are abutted to create a long platform, each abutted end shall rest on a separate support surface. This provision does not preclude the use of common support members, such as “T” sections, to support abutting planks, or hook on platforms designed to rest on common supports.

(g) On scaffolds where platforms are overlapped to create a long platform, the overlap shall occur only over supports, and shall not be less than 12 inches (30 cm) unless the platforms are nailed together or otherwise restrained to prevent movement.

(h) At all points of a scaffold where the platform changes direction, such as turning a corner, any platform that rests on a bearer at an angle other than a right angle shall be laid first, and platforms which rest at right angles over the same bearer shall be laid second, on top of the first platform.

WAC 296-155-483 (Cont.)

(i) Wood platforms shall not be covered with opaque finishes, except that platform edges may be covered or marked for identification. Platforms may be coated periodically with wood preservatives, fire-retardant finishes, and slip-resistant finishes; however, the coating may not obscure the top or bottom wood surfaces.

(j) Scaffold components shall not be intermixed unless the components fit together without force and the scaffold's structural integrity is maintained by the user. Scaffold components shall not be modified in order to intermix them unless a qualified person determines the resulting scaffold is structurally sound.

(k) Scaffold components made of dissimilar metals shall not be used together unless a competent person has determined that galvanic action will not reduce the strength of any component to a level below that required by subsection (1)(a) of this section.

(3) **"Criteria for supported scaffolds."**

(a) Supported scaffolds with a height to base width (including outrigger supports, if used) ratio of more than four to one (4:1) shall be restrained from tipping by guying, tying, bracing, or equivalent means, as follows:

(i) Guys, ties, and braces shall be installed at locations where horizontal members support both inner and outer legs.

(ii) Guys, ties, and braces shall be installed according to the scaffold manufacturer's recommendations or at the closest horizontal member to the 4:1 height and be repeated vertically at locations of horizontal members every 20 feet (6.1 m) or less thereafter for scaffolds 3 feet (0.91 m) wide or less, and every 26 feet (7.9 m) or less thereafter for scaffolds greater than 3 feet (0.91 m) wide. The top guy, tie or brace of completed scaffolds shall be placed no further than the 4:1 height from the top. Such guys, ties and braces shall be installed at each end of the scaffold and at horizontal intervals not to exceed 30 feet (9.1 m) (measured from one end (not both) towards the other).

(b) Ties, guys, braces, or outriggers shall be used to prevent the tipping of supported scaffolds in all circumstances where an eccentric load, such as a cantilevered work platform, is applied or is transmitted to the scaffold.

(c) Supported scaffold poles, legs, posts, frames, and uprights shall bear on base plates resting on adequate firm foundation, such as dry compacted soil, mud sills or concrete slabs.

(i) Footings shall be level, sound, rigid, and capable of supporting the loaded scaffold without settling or displacement.

(ii) Unstable objects shall not be used to support scaffolds or platform units.

(iii) Unstable objects shall not be used as working platforms.

(iv) Front-end loaders and similar pieces of equipment shall not be used to support scaffold platforms unless they have been specifically designed by the manufacturer for such use.

WAC 296-155-483 (Cont.)

(v) Fork-lifts shall not be used to support scaffold platforms unless the entire platform is attached to the fork and the fork-lift is not moved horizontally while the platform is occupied.

(d) Supported scaffold poles, legs, posts, frames, and uprights shall be plumb and braced to prevent swaying and displacement.

(4) **"Criteria for suspension scaffolds."**

(a) All suspension scaffold support devices, such as outrigger beams, cornice hooks, parapet clamps, and similar devices, shall rest on surfaces capable of supporting at least 4 times the load imposed on them by the scaffold operating at the rated load of the hoist (or at least 1.5 times the load imposed on them by the scaffold at the stall capacity of the hoist, whichever is greater).

(b) Suspension scaffold outrigger beams, when used, shall be made of structural metal or equivalent strength material, and shall be restrained to prevent movement.

(c) The inboard ends of suspension scaffold outrigger beams shall be stabilized by bolts or other direct connections to the floor or roof deck, or they shall have their inboard ends stabilized by counterweights, except masons' multi-point adjustable suspension scaffold outrigger beams shall not be stabilized by counterweights.

(i) Before the scaffold is used, direct connections shall be evaluated by a competent person who shall confirm, based on the evaluation, that the supporting surfaces are capable of supporting the loads to be imposed. In addition, masons' multi-point adjustable suspension scaffold connections shall be designed by an engineer experienced in such scaffold design.

(ii) Counterweights shall be made of nonflowable material. Sand, gravel and similar materials that can be easily dislocated shall not be used as counterweights.

(iii) Only those items specifically designed as counterweights shall be used to counterweight scaffold systems. Construction materials such as, but not limited to, masonry units and rolls of roofing felt, shall not be used as counterweights.

(iv) Counterweights shall be secured by mechanical means to the outrigger beams to prevent accidental displacement.

(v) Counterweights shall not be removed from an outrigger beam until the scaffold is disassembled.

(vi) Outrigger beams which are not stabilized by bolts or other direct connections to the floor or roof deck shall be secured by tiebacks.

(vii) Tiebacks shall be equivalent in strength to the suspension ropes.

(viii) Outrigger beams shall be placed perpendicular to its bearing support (usually the face of the building or structure). However, where the employer can demonstrate that it is not possible to place an outrigger beam perpendicular to the face of the building or structure because of obstructions that cannot be moved, the outrigger beam may be placed at some other angle, provided opposing angle tiebacks are used.

WAC 296-155-483 (Cont.)

(ix) Tiebacks shall be secured to a structurally sound anchorage on the building or structure. Sound anchorages include structural members, but do not include standpipes, vents, other piping systems, or electrical conduit.

(x) Tiebacks shall be installed perpendicular to the face of the building or structure, or opposing angle tiebacks shall be installed. Single tiebacks installed at an angle are prohibited.

(d) Suspension scaffold outrigger beams shall be:

(i) Provided with stop bolts or shackles at both ends;

(ii) Securely fastened together with the flanges turned out when channel iron beams are used in place of I-beams;

(iii) Installed with all bearing supports perpendicular to the beam center line;

(iv) Set and maintained with the web in a vertical position; and

(v) When an outrigger beam is used, the shackle or clevis with which the rope is attached to the outrigger beam shall be placed directly over the center line of the stirrup.

(e) Suspension scaffold support devices such as cornice hooks, roof hooks, roof irons, parapet clamps, or similar devices shall be:

(i) Made of steel, wrought iron, or materials of equivalent strength;

(ii) Supported by bearing blocks; and

(iii) Secured against movement by tiebacks installed at right angles to the face of the building or structure, or opposing angle tiebacks shall be installed and secured to a structurally sound point of anchorage on the building or structure. Sound points of anchorage include structural members, but do not include standpipes, vents, other piping systems, or electrical conduit.

(iv) Tiebacks shall be equivalent in strength to the hoisting rope.

(f) When winding drum hoists are used on a suspension scaffold, they shall contain not less than four wraps of the suspension rope at the lowest point of scaffold travel. When other types of hoists are used, the suspension ropes shall be long enough to allow the scaffold to be lowered to the level below without the rope end passing through the hoist, or the rope end shall be configured or provided with means to prevent the end from passing through the hoist.

(g) The use of repaired wire rope as suspension rope is prohibited.

(h) Wire suspension ropes shall not be joined together except through the use of eye splice thimbles connected with shackles or coverplates and bolts.

WAC 296-155-483 (Cont.)

(i) The load end of wire suspension ropes shall be equipped with proper size thimbles and secured by eyesplicing or equivalent means.

(j) Ropes shall be inspected for defects by a competent person prior to each workshift and after every occurrence which could affect a rope's integrity. Ropes shall be replaced if any of the following conditions exist:

(i) Any physical damage which impairs the function and strength of the rope.

(ii) Kinks that might impair the tracking or wrapping of rope around the drum(s) or sheave(s).

(iii) Six randomly distributed broken wires in one rope lay or three broken wires in one strand in one rope lay.

(iv) Abrasion, corrosion, scrubbing, flattening or peening causing loss of more than one-third of the original diameter of the outside wires.

(v) Heat damage caused by a torch or any damage caused by contact with electrical wires.

(vi) Evidence that the secondary brake has been activated during an overspeed condition and has engaged the suspension rope.

(k) Swaged attachments or spliced eyes on wire suspension ropes shall not be used unless they are made by the wire rope manufacturer or a qualified person.

(l) When wire rope clips are used on suspension scaffolds:

(i) There shall be a minimum of 3 wire rope clips installed, with the clips a minimum of 6 rope diameters apart;

(ii) Clips shall be installed according to the manufacturer's recommendations;

(iii) Clips shall be retightened to the manufacturer's recommendations after the initial loading;

(iv) Clips shall be inspected and retightened to the manufacturer's recommendations at the start of each workshift thereafter;

(v) U-bolt clips shall not be used at the point of suspension for any scaffold hoist;

(vi) When U-bolt clips are used, the U-bolt shall be placed over the dead end of the rope, and the saddle shall be placed over the live end of the rope.

(m) Suspension scaffold power-operated hoists and manual hoists shall be tested by a qualified testing laboratory.

(n) Gasoline-powered equipment and hoists shall not be used on suspension scaffolds.

(o) Gears and brakes of power-operated hoists used on suspension scaffolds shall be enclosed.

WAC 296-155-483 (Cont.)

(p) In addition to the normal operating brake, suspension scaffold power-operated hoists and manually operated hoists shall have a braking device or locking pawl which engages automatically when a hoist makes either of the following uncontrolled movements: An instantaneous change in momentum or an accelerated overspeed.

(q) Manually operated hoists shall require a positive crank force to descend.

(r) Two-point and multi-point suspension scaffolds shall be tied or otherwise secured to prevent them from swaying, as determined to be necessary based on an evaluation by a competent person. Window cleaners' anchors shall not be used for this purpose.

(s) Devices whose sole function is to provide emergency escape and rescue shall not be used as working platforms. This provision does not preclude the use of systems which are designed to function both as suspension scaffolds and emergency systems.

(5) **"Access."** This paragraph applies to scaffold access for all employees. Access requirements for employees erecting or dismantling supported scaffolds are specifically addressed in (i) of this subsection.

(a) When scaffold platforms are more than 2 feet (0.6 m) above or below a point of access, portable ladders, hook-on ladders, attachable ladders, stair towers (scaffold stairways/towers), stairway-type ladders (such as ladder stands), ramps, walkways, integral prefabricated scaffold access, or direct access from another scaffold, structure, personnel hoist, or similar surface shall be used. Crossbraces shall not be used as a means of access.

(b) Portable, hook-on, and attachable ladders (additional requirements for the proper construction and use of portable ladders are contained in Part J of this chapter -- Stairways and ladders):

(i) Portable, hook-on, and attachable ladders shall be positioned so as not to tip the scaffold;

(ii) Hook-on and attachable ladders shall be positioned so that their bottom rung is not more than 24 inches (61 cm) above the scaffold supporting level;

(iii) When hook-on and attachable ladders are used on a supported scaffold more than 24 feet (7.3 m) high, they shall have rest platforms at 20 foot (6.1 m) maximum vertical intervals except the first platform may be up to 24 feet above the ground;

(iv) Hook-on and attachable ladders shall be specifically designed for use with the type of scaffold used;

(v) Hook-on and attachable ladders shall have a minimum rung length of 11 1/2 inches (29 cm); and

(vi) Hook-on and attachable ladders shall have uniformly spaced rungs with a maximum spacing between rungs of 16 3/4 inches.

(c) Stairway-type ladders shall:

(i) Be positioned such that their bottom step is not more than 24 inches (61 cm) above the scaffold supporting level;

WAC 296-155-483 (Cont.)

(ii) Be provided with rest platforms at 12-foot (3.7 m) maximum vertical intervals;

(iii) Have a minimum step width of 16 inches (41 cm), except that mobile scaffold stairway-type ladders shall have a minimum step width of 11 1/2 inches (30 cm); and

(iv) Have slip-resistant treads on all steps and landings.

(d) Stairtowers (scaffold stairway/towers) shall be positioned such that their bottom step is not more than 24 inches (61 cm) above the scaffold supporting level.

(i) A stairrail consisting of a toprail and a midrail shall be provided on each side of each scaffold stairway.

(ii) The toprail of each stairrail system shall also be capable of serving as a handrail, unless a separate handrail is provided.

(iii) Handrails, and toprails that serve as handrails, shall provide an adequate handhold for employees grasping them to avoid falling.

(iv) Stairrail systems and handrails shall be surfaced to prevent injury to employees from punctures or lacerations, and to prevent snagging of clothing.

(v) The ends of stairrail systems and handrails shall be constructed so that they do not constitute a projection hazard.

(vi) Handrails, and toprails that are used as handrails, shall be at least 3 inches

(7.6 cm) from other objects.

(vii) Stairrails shall be not less than 28 inches (71 cm) nor more than 37 inches

(94 cm) from the upper surface of the stairrail to the surface of the tread, in line with the face of the riser at the forward edge of the tread.

(viii) A landing platform at least 18 inches (45.7 cm) wide by at least 18 inches

(45.7 cm) long shall be provided at each level.

(ix) Each scaffold stairway shall be at least 18 inches (45.7 cm) wide between stairrails.

(x) Treads and landings shall have slip-resistant surfaces.

(xi) Stairways shall be installed between 40 degrees and 60 degrees from the horizontal.

(xii) Guardrails meeting the requirements of subsection (7)(d) of this section shall be provided on the open sides and ends of each landing.

(xiii) Riser height shall be uniform, within 1/4 inch, (0.6 cm) for each flight of stairs. Greater variations in riser height are allowed for the top and bottom steps of the entire system, not for each flight of stairs.

WAC 296-155-483 (Cont.)

(xiv) Tread depth shall be uniform, within 1/4 inch, for each flight of stairs.

(e) Ramps and walkways.

(i) Ramps and walkways 4 feet (1.2 m) or more above lower levels shall have guardrail systems which comply with Part K of this chapter--Floor openings, wall openings and stairways:

(ii) No ramp or walkway shall be inclined more than a slope of one vertical to three horizontal (20 degrees above the horizontal).

(iii) If the slope of a ramp or a walkway is steeper than one vertical in eight horizontal, the ramp or walkway shall have cleats not more than fourteen inches (35 cm) apart which are securely fastened to the planks to provide footing.

(f) Integral prefabricated scaffold access frames shall:

(i) Be specifically designed and constructed for use as ladder rungs;

(ii) Have a rung length of at least 8 inches (20 cm);

(iii) Not be used as work platforms when rungs are less than 11 1/2 inches in length, unless each affected employee uses fall protection, or a positioning device, which complies with WAC 296-155-24510;

(iv) Be uniformly spaced within each frame section;

(v) Be provided with rest platforms at 20-foot (6.1 m) maximum vertical intervals on all supported scaffolds more than 24 feet (7.3 m) high; and

(vi) Have a maximum spacing between rungs of 16 3/4 inches (43 cm). Nonuniform rung spacing caused by joining end frames together is allowed, provided the resulting spacing does not exceed 16 3/4 inches (43 cm).

(g) Steps and rungs of ladder and stairway type access shall line up vertically with each other between rest platforms.

(h) Direct access to or from another surface shall be used only when the scaffold is not more than 14 inches (36 cm) horizontally and not more than 24 inches (61 cm) vertically from the other surface.

(i) Access for employees erecting or dismantling supported scaffolds shall be in accordance with the following:

(i) The employer shall provide safe means of access for each employee erecting or dismantling a scaffold where the provision of safe access is feasible and does not create a greater hazard. The employer shall have a competent person determine whether it is feasible or would pose a greater hazard to provide, and have employees use a safe means of access. This determination shall be based on site conditions and the type of scaffold being erected or dismantled.

WAC 296-155-483 (Cont.)

(ii) Hook-on or attachable ladders shall be installed as soon as scaffold erection has progressed to a point that permits safe installation and use.

(iii) When erecting or dismantling tubular welded frame scaffolds, (end) frames, with horizontal members that are parallel, level and are not more than 22 inches apart vertically may be used as climbing devices for access, provided they are erected in a manner that creates a usable ladder and provides good hand hold and foot space.

(iv) Cross braces on tubular welded frame scaffolds shall not be used as a means of access or egress.

(6) **"Use."**

(a) Scaffolds and scaffold components shall not be loaded in excess of their maximum intended loads or rated capacities, whichever is less.

(b) The use of shore or lean-to scaffolds is prohibited.

(c) Scaffolds and scaffold components shall be inspected for visible defects by a competent person before each work shift, and after any occurrence which could affect a scaffold's structural integrity.

(d) Any part of a scaffold damaged or weakened such that its strength is less than that required by subsection (1)(a) of this section shall be immediately repaired or replaced, braced to meet those provisions, or removed from service until repaired.

(e) Scaffolds shall not be moved horizontally while employees are on them, unless they have been designed by a registered professional engineer specifically for such movement or, for mobile scaffolds, where the provisions of WAC 296-155-484(23) are followed.

(f) The clearance between scaffolds and power lines shall be as follows: Scaffolds shall not be erected, used, dismantled, altered, or moved such that they or any conductive material handled on them might come closer to exposed and energized power lines than as follows:

WAC 296-155-483 (Cont.)

*Insulated Lines Voltage	Minimum Distance	Alternatives
Less than 300 volts *300 volts to 50 kv. More than 50 kv.	3 feet (0.9 m) 10 feet (3.1 m) 10 feet (3.1 m plus 0.4 inches (1.0 cm) for each 1 kv over 50 kv.	2 times the length of the line insulator, but never less than 10 feet (3.1 m).
*Uninsulated lines		
Voltage	Minimum distance	Alternatives
Less than 50 kv. More than 50 kv.	10 feet (3.1 m). 10 feet (3.1 m) plus 0.4 inches (1.0 cm) for each 1 kv over 50 kv.	2 times the length of the line insulator, but never less than 10 feet (3.1 m).

Exception to subsection (6)(f): Scaffolds and materials may be closer to power lines than specified above where such clearance is necessary for performance of work, and only after the utility company, or electrical system operator, has been notified of the need to work closer and the utility company, or electrical system operator, has deenergized the lines, relocated the lines, or installed protective coverings to prevent accidental contact with the lines.

(g) Scaffolds shall be erected, moved, dismantled, or altered only under the supervision and direction of a competent person qualified in scaffold erection, moving, dismantling or alteration. Such activities shall be performed only by experienced and trained employees selected for such work by the competent person.

(h) Employees shall be prohibited from working on scaffolds covered with snow, ice, or other slippery material except as necessary for removal of such materials.

(i) Where swinging loads are being hoisted onto or near scaffolds such that the loads might contact the scaffold, tag lines or equivalent measures to control the loads shall be used.

(j) Suspension ropes supporting adjustable suspension scaffolds shall be of a diameter large enough to provide sufficient surface area for the functioning of brake and hoist mechanisms.

(k) Suspension ropes shall be shielded from heat-producing processes. When acids or other corrosive substances are used on a scaffold, the ropes shall be shielded, treated to protect against the corrosive substances, or shall be of a material that will not be damaged by the substance being used.

(l) Work on or from scaffolds is prohibited during storms or high winds unless a competent person has determined that it is safe for employees to be on the scaffold and those employees are protected by a personal fall arrest system or wind screens. Wind screens shall not be used unless the scaffold is secured against the anticipated wind forces imposed.

WAC 296-155-483 (Cont.)

(m) Debris shall not be allowed to accumulate on platforms.

(n) Makeshift devices, such as but not limited to boxes and barrels, shall not be used on top of scaffold platforms to increase the working level height of employees.

(o) Ladders shall not be used on scaffolds to increase the working level height of employees, except on large area scaffolds where employers have satisfied the following criteria:

(i) When the ladder is placed against a structure which is not a part of the scaffold, the scaffold shall be secured against the sideways thrust exerted by the ladder;

(ii) The platform units shall be secured to the scaffold to prevent their movement;

(iii) The ladder legs shall be on the same platform or other means shall be provided to stabilize the ladder against unequal platform deflection; and

(iv) The ladder legs shall be secured to prevent them from slipping or being pushed off the platform.

(p) Platforms shall not deflect more than 1/60 of the span when loaded.

(q) To reduce the possibility of welding current arcing through the suspension wire rope when performing welding from suspended scaffolds, the following precautions shall be taken, as applicable:

(i) An insulated thimble shall be used to attach each suspension wire rope to its hanging support (such as cornice hook or outrigger). Excess suspension wire rope and any additional independent lines from grounding shall be insulated;

(ii) The suspension wire rope shall be covered with insulating material extending at least 4 feet (1.2 m) above the hoist. If there is a tail line below the hoist, it shall be insulated to prevent contact with the platform. The portion of the tail line that hangs free below the scaffold shall be guided or retained, or both, so that it does not become grounded;

(iii) Each hoist shall be covered with insulated protective covers;

(iv) In addition to a work lead attachment required by the welding process, a grounding conductor shall be connected from the scaffold to the structure. The size of this conductor shall be at least the size of the welding process work lead, and this conductor shall not be in series with the welding process or the work piece;

(v) If the scaffold grounding lead is disconnected at any time, the welding machine shall be shut off; and

(vi) An active welding rod or uninsulated welding lead shall not be allowed to contact the scaffold or its suspension system.

WAC 296-155-483 (Cont.)

(7) **"Fall protection."**

(a) Each employee on a scaffold more than 10 feet (3.1 m) above a lower level shall be protected from falling to that lower level. Subsection (7)(a)(i) through (vii) of this section establish the types of fall protection to be provided to the employees on each type of scaffold. Subsection (7)(b) of this section addresses fall protection for scaffold erectors and dismantlers.

Note to subsection (7)(a): The fall protection requirements for employees installing suspension scaffold support systems on floors, roofs, and other elevated surfaces are set forth in Parts C-1 and K of this chapter.

(i) Each employee on a boatswains' chair, catenary scaffold, float scaffold, needle beam scaffold, or ladder jack scaffold shall be protected by a personal fall arrest system;

(ii) Each employee on a single-point or two-point adjustable suspension scaffold shall be protected by both a personal fall arrest system and guardrail system;

(iii) Each employee on a crawling board (chicken ladder) shall be protected by a personal fall arrest system, a guardrail system (with minimum 200 pound toprail capacity), or by a three-fourth inch (1.9 cm) diameter grabline or equivalent handhold securely fastened beside each crawling board;

(iv) Each employee on a self-contained adjustable scaffold shall be protected by a guardrail system (with minimum 200 pound toprail capacity) when the platform is supported by the frame structure, and by both a personal fall arrest system and a guardrail system (with minimum 200 pound toprail capacity) when the platform is supported by ropes;

(v) Each employee on a walkway located within a scaffold shall be protected by a guardrail system (with minimum 200 pound toprail capacity) installed within 9 1/2 inches (24.1 cm) of and along at least one side of the walkway;

(vi) Each employee performing overhand bricklaying operations from a supported scaffold shall be protected from falling from all open sides and ends of the scaffold (except at the side next to the wall being laid) by the use of a personal fall arrest system or guardrail system (with minimum 200 pound toprail capacity);

(vii) For all scaffolds not otherwise specified in (a)(i) through (vi) of this subsection, each employee shall be protected by the use of personal fall arrest systems or guardrail systems meeting the requirements of (d) of this subsection.

(b) The employer shall have a competent person determine the feasibility and safety of providing fall protection for employees erecting or dismantling supported scaffolds. Employers are required to provide fall protection for employees erecting or dismantling supported scaffolds where the installation and use of such protection is feasible and does not create a greater hazard. The maximum feasible fall protection shall be used.

(c) In addition to meeting the requirements of chapter 296-155 WAC, Part C-1, personal fall arrest systems used on scaffolds shall be attached by lanyard to a vertical lifeline, horizontal lifeline, or appropriate structural member. Vertical lifelines shall not be used when overhead components, such as overhead protection or additional platform levels, are part of a single-point or two-point adjustable suspension scaffold.

WAC 296-155-483 (Cont.)

(i) When vertical lifelines are used, they shall be fastened to a fixed safe point of anchorage, shall be independent of the scaffold, and shall be protected from sharp edges and abrasion. Safe points of anchorage include structural members of buildings, but do not include standpipes, vents, other piping systems, electrical conduit, outrigger beams, or counterweights.

(ii) When horizontal lifelines are used, they shall be secured to two or more structural members of the scaffold, or they may be looped around both suspension and independent suspension lines (on scaffolds so equipped) above the hoist and brake attached to the end of the scaffold. Horizontal lifelines shall not be attached only to the suspension ropes.

(iii) On suspended scaffolds or similar work platforms with horizontal lifelines which may become vertical lifelines, the devices used to connect to a horizontal lifeline shall be capable of locking in both directions on the lifeline.

(iv) When lanyards are connected to horizontal lifelines or structural members on a single-point or two-point adjustable suspension scaffold, the scaffold shall be equipped with additional independent support lines and automatic locking devices capable of stopping the fall of the scaffold in the event one or both of the suspension ropes fail. The independent support lines shall be equal in number and strength to the suspension ropes.

(v) Vertical lifelines, independent support lines, and suspension ropes shall not be attached to each other, nor shall they be attached to or use the same point of anchorage, nor shall they be attached to the same point on the scaffold or personal fall arrest system.

(d) Guardrail systems installed to meet the requirements of this section shall comply with the following provisions (guardrail systems built in accordance with Appendix A to this part will be deemed to meet the requirements of (d)(vii), (viii), and (ix) of this subsection):

(i) Guardrail systems shall be installed along all open sides and ends of platforms. Guardrail systems shall be installed before the scaffold is released for use by employees other than erection/dismantling crews.

(ii) The top edge height of toprails or equivalent member on supported scaffolds manufactured or first placed in service after January 1, 2000, shall be installed between 38 inches (0.97 m) and 45 inches (1.2 m) above the platform surface. The top edge height on supported scaffolds manufactured and placed in service before January 1, 2000, and on all suspended scaffolds where both a guardrail and a personal fall arrest system are required shall be between 36 inches (0.9 m) and 45 inches (1.2 m). When conditions warrant, the height of the top edge may exceed the 45-inch height, provided the guardrail system meets all other criteria of (d) of this subsection.

(iii) When midrails, screens, mesh, intermediate vertical members, solid panels, or equivalent structural members are used, they shall be installed between the top edge of the guardrail system and the scaffold platform.

(iv) When midrails are used, they shall be installed at a height approximately midway between the top edge of the guardrail system and the platform surface.

(v) When screens and mesh are used, they shall extend from the top edge of the guardrail system to the scaffold platform, and along the entire opening between the supports.

(vi) When intermediate members (such as balusters or additional rails) are used, they shall not be more than 19 inches (48 cm) apart.

WAC 296-155-483 (Cont.)

(vii) Each toprail or equivalent member of a guardrail system shall be capable of withstanding, without failure, a force applied in any downward or horizontal direction at any point along its top edge of at least 100 pounds (445 n) for guardrail systems installed on single-point adjustable suspension scaffolds or two-point adjustable suspension scaffolds, and at least 200 pounds (890 n) for guardrail systems installed on all other scaffolds.

(viii) When the loads specified in (d)(vii) of this subsection are applied in a downward direction, the top edge shall not drop below the height above the platform surface that is prescribed in (d)(ii) of this subsection.

(ix) Midrails, screens, mesh, intermediate vertical members, solid panels, and equivalent structural members of a guardrail system shall be capable of withstanding, without failure, a force applied in any downward or horizontal direction at any point along the midrail or other member of at least 75 pounds (333 n) for guardrail systems with a minimum 100 pound toprail capacity, and at least 150 pounds (666 n) for guardrail systems with a minimum 200 pound toprail capacity.

(x) Suspension scaffold hoists and nonwalk-through stirrups may be used as end guardrails, if the space between the hoist or stirrup and the side guardrail or structure does not allow passage of an employee to the end of the scaffold.

(xi) Guardrails shall be surfaced to prevent injury to an employee from punctures or lacerations, and to prevent snagging of clothing.

(xii) The ends of all rails shall not overhang the terminal posts except when such overhang does not constitute a projection hazard to employees.

(xiii) Steel or plastic banding shall not be used as a toprail or midrail.

(xiv) Manila or plastic (or other synthetic) rope being used for toprails or midrails shall be inspected by a competent person as frequently as necessary to ensure that it continues to meet the strength requirements of subsection (7) of this section.

(xv) Crossbraces may be used in lieu of either the toprail or midrail providing the resulting guardrail system meets all the other criteria of (d) of this subsection and this does not result in openings in the guardrail system or between the guardrail system and the platform through which a nineteen-inch diameter sphere can pass.

(8) **"Falling object protection."**

(a) In addition to wearing hardhats each employee on a scaffold shall be provided with additional protection from falling hand tools, debris, and other small objects through the installation of toeboards, screens, or guardrail systems, or through the erection of debris nets, catch platforms, or canopy structures that contain or deflect the falling objects. When the falling objects are too large, heavy or massive to be contained or deflected by any of the above-listed measures, the employer shall place such potential falling objects away from the edge of the surface from which they could fall and shall secure those materials as necessary to prevent their falling.

WAC 296-155-483 (Cont.)

(b) Where there is a danger of tools, materials, or equipment falling from a scaffold and striking employees below, the following provisions apply:

(i) The area below the scaffold to which objects can fall shall be barricaded, and employees shall not be permitted to enter the hazard area; or

(ii) A toeboard shall be erected along the edge of platforms above lower levels for a distance sufficient to protect employees below, except on float (ship) scaffolds where an edging of 3/4 x 1 1/2 inch (2 x 4 cm) wood or equivalent may be used in lieu of toeboards; or

(iii) Where tools, materials, or equipment are piled to a height higher than the top edge of the toeboard, paneling or screening extending from the toeboard or platform to the top of the guardrail shall be erected for a distance sufficient to protect employees below; or

(iv) A guardrail system shall be installed with openings small enough to prevent passage of potential falling objects; or

(v) A canopy structure, debris net, or catch platform strong enough to withstand the impact forces of the potential falling objects shall be erected over the employees below.

(c) Canopies, when used for falling object protection, shall comply with the following criteria:

(i) Canopies shall be installed between the falling object hazard and the employees.

(ii) When canopies are used on suspension scaffolds for falling object protection, the scaffold shall be equipped with additional independent support lines equal in number to the number of points supported, and equivalent in strength to the strength of the suspension ropes.

(iii) Independent support lines and suspension ropes shall not be attached to the same points of anchorage.

(d) Where used, toeboards shall be:

(i) Capable of withstanding, without failure, a force of at least 50 pounds (222 n) applied in any downward or horizontal direction at any point along the toeboard (toeboards built in accordance with Appendix A to this part will be deemed to meet this requirement); and

(ii) At least three and one-half inches (9 cm) high from the top edge of the toeboard to the level of the walking/working surface. Toeboards shall be securely fastened in place at the outermost edge of the platform and have not more than 1/4 inch (0.7 cm) clearance above the walking/working surface. Toeboards shall be solid or with openings not over one inch (2.5 cm) in the greatest dimension.

[Statutory Authority: RCW 49.17.010, .040, .050. 00-14-058 (Order 99-43), § 296-155-483, filed 07/03/2000, effective 10/01/2000. Statutory Authority: Chapter 49.17.010, .040, .050, .600 RCW. 98-05-046 (Order 97-10), § 296-155-483, filed 2/13/98, effective 4/15/98. Chapter 49.17 RCW. 91-24-017 (Order 91-07), § 296-155-483, filed 11/22/91, effective 12/24/91.]

WAC 296-155-484 Additional requirements applicable to specific types of scaffolds. In addition to the applicable requirements of WAC 296-155-483, the following requirements apply to the specific types of scaffolds indicated. Scaffolds not specifically addressed by WAC 296-155-484, such as but not limited to systems scaffolds, must meet the requirements of WAC 296-155-483.

WAC 296-155-484 (Cont.)

(1) **"Pole scaffolds."**

(a) When platforms are being moved to the next level, the existing platform shall be left undisturbed until the new bearers have been set in place and braced, prior to receiving the new platforms.

(b) Crossbracing shall be installed between the inner and outer sets of poles on double pole scaffolds.

(c) Diagonal bracing in both directions shall be installed across the entire inside face of double-pole scaffolds used to support loads equivalent to a uniformly distributed load of 50 pounds (222 kg) or more per square foot (929 square cm).

(d) Diagonal bracing in both directions shall be installed across the entire outside face of all double- and single-pole scaffolds.

(e) Runners and bearers shall be installed on edge.

(f) Bearers shall extend a minimum of 3 inches (7.6 cm) over the outside edges of runners.

(g) Runners shall extend over a minimum of two poles, and shall be supported by bearing blocks securely attached to the poles.

(h) Braces, bearers, and runners shall not be spliced between poles.

(i) Where wooden poles are spliced, the ends shall be squared and the upper section shall rest squarely on the lower section. Wood splice plates shall be provided on at least two adjacent sides, and shall extend at least 2 feet (0.6 m) on either side of the splice, overlap the abutted ends equally, and have at least the same cross-sectional areas as the pole. Splice plates of other materials of equivalent strength may be used.

(j) Pole scaffolds over 60 feet in height shall be designed by a registered professional engineer, and shall be constructed and loaded in accordance with that design. Nonmandatory Appendix A to this part contains examples of criteria that will enable an employer to comply with design and loading requirements for pole scaffolds under 60 feet in height.

(2) **"Tube and coupler scaffolds."**

(a) When platforms are being moved to the next level, the existing platform shall be left undisturbed until the new bearers have been set in place and braced prior to receiving the new platforms.

(b) Transverse bracing forming an "X" across the width of the scaffold shall be installed at the scaffold ends and at least at every third set of posts horizontally (measured from only one end) and every fourth runner vertically. Bracing shall extend diagonally from the inner or outer posts or runners upward to the next outer or inner posts or runners. Building ties shall be installed at the bearer levels between the transverse bracing and shall conform to the requirements of WAC 296-155-483 (3)(a).

(c) On straight run scaffolds, longitudinal bracing across the inner and outer rows of posts shall be installed diagonally in both directions, and shall extend from the base of the end posts upward to the top of the scaffold at approximately a 45 degree angle. On scaffolds whose length is greater than their height, such bracing shall be repeated beginning at least at every fifth post. On

WAC 296-155-484 (Cont.)

scaffolds whose length is less than their height, such bracing shall be installed from the base of the end posts upward to the opposite end posts, and then in alternating directions until reaching the top of the scaffold. Bracing shall be installed as close as possible to the intersection of the bearer and post or runner and post.

(d) Where conditions preclude the attachment of bracing to posts, bracing shall be attached to the runners as close to the post as possible.

(e) Bearers shall be installed transversely between posts, and when coupled to the posts, shall have the inboard coupler bear directly on the runner coupler. When the bearers are coupled to the runners, the couplers shall be as close to the posts as possible.

(f) Bearers shall extend beyond the posts and runners, and shall provide full contact with the coupler.

(g) Runners shall be installed along the length of the scaffold, located on both the inside and outside posts at level heights (when tube and coupler guardrails and midrails are used on outside posts, they may be used in lieu of outside runners).

(h) Runners shall be interlocked on straight runs to form continuous lengths, and shall be coupled to each post. The bottom runners and bearers shall be located as close to the base as possible.

(i) Couplers shall be of a structural metal, such as drop-forged steel, malleable iron, or structural grade aluminum. The use of gray cast iron is prohibited.

(j) Tube and coupler scaffolds over 125 feet in height shall be designed by a registered professional engineer, and shall be constructed and loaded in accordance with such design. Nonmandatory Appendix A to this part contains examples of criteria that will enable an employer to comply with design and loading requirements for tube and coupler scaffolds under 125 feet in height.

(3) **"Fabricated frame scaffolds"** (tubular welded frame scaffolds).

(a) When moving platforms to the next level, the existing platform shall be left undisturbed until the new end frames have been set in place and braced prior to receiving the new platforms.

(b) Frames and panels shall be braced by cross, horizontal, or diagonal braces, or combination thereof, which secure vertical members together laterally. The cross braces shall be of such length as will automatically square and align vertical members so that the erected scaffold is always plumb, level, and square. All brace connections shall be secured.

(c) Frames and panels shall be joined together vertically by coupling or stacking pins or equivalent means.

(d) Where uplift can occur which would displace scaffold end frames or panels, the frames or panels shall be locked together vertically by pins or equivalent means.

(e) Brackets used to support cantilevered loads shall:

(i) Be seated with side-brackets parallel to the frames and end-brackets at 90 degrees to the frames;

WAC 296-155-484 (Cont.)

(ii) Not be bent or twisted from these positions; and

(iii) Be used only to support personnel, unless the scaffold has been designed for other loads by a qualified engineer and built to withstand the tipping forces caused by those other loads being placed on the bracket-supported section of the scaffold.

(f) Scaffolds over 125 feet (38.0 m) in height above their base plates shall be designed by a registered professional engineer, and shall be constructed and loaded in accordance with such design.

(4) **"Plasterers', decorators', and large area scaffolds."** Scaffolds shall be constructed in accordance with subsection (1), (2), or (3) of this section, as appropriate.

(5) **"Bricklayers' square scaffolds (squares)."**

(a) Scaffolds made of wood shall be reinforced with gussets on both sides of each corner.

(b) Diagonal braces shall be installed on all sides of each square.

(c) Diagonal braces shall be installed between squares on the rear and front sides of the scaffold, and shall extend from the bottom of each square to the top of the next square.

(d) Scaffolds shall not exceed three tiers in height, and shall be so constructed and arranged that one square rests directly above the other. The upper tiers shall stand on a continuous row of planks laid across the next lower tier, and shall be nailed down or otherwise secured to prevent displacement.

(6) **"Horse scaffolds."**

(a) Scaffolds shall not be constructed or arranged more than two tiers or 10 feet (3.0 m) in height, whichever is less.

(b) When horses are arranged in tiers, each horse shall be placed directly over the horse in the tier below.

(c) When horses are arranged in tiers, the legs of each horse shall be nailed down or otherwise secured to prevent displacement.

(d) When horses are arranged in tiers, each tier shall be crossbraced.

(7) **"Form scaffolds and carpenters' bracket scaffolds."**

(a) Each bracket, except those for wooden bracket-form scaffolds, shall be attached to the supporting formwork or structure by means of one or more of the following: Nails; a metal stud attachment device; welding; hooking over a secured structural supporting member, with the form wales either bolted to the form or secured by snap ties or tie bolts extending through the form and securely anchored; or, for carpenters' bracket scaffolds only, by a bolt extending through to the opposite side of the structure's wall.

(b) Wooden bracket-form scaffolds shall be an integral part of the form panel.

WAC 296-155-484 (Cont.)

(c) Folding type metal brackets, when extended for use, shall be either bolted or secured with a locking-type pin.

(8) **"Roof bracket scaffolds."**

(a) Scaffold brackets shall be constructed to fit the pitch of the roof and shall provide a level support for the platform.

(b) Brackets (including those provided with pointed metal projections) shall be anchored in place by nails unless it is impractical to use nails. When nails are not used, brackets shall be secured in place with first-grade manila rope of at least three-fourth inch (1.9 cm) diameter, or equivalent.

(9) **"Outrigger scaffolds."**

(a) The inboard end of outrigger beams, measured from the fulcrum point to the extreme point of anchorage, shall be not less than one and one-half times the outboard end in length.

(b) Outrigger beams fabricated in the shape of an I-beam or channel shall be placed so that the web section is vertical.

(c) The fulcrum point of outrigger beams shall rest on secure bearings at least 6 inches

(15.2 cm) in each horizontal dimension.

(d) Outrigger beams shall be secured in place against movement, and shall be securely braced at the fulcrum point against tipping.

(e) The inboard ends of outrigger beams shall be securely anchored either by means of braced struts bearing against sills in contact with the overhead beams or ceiling, or by means of tension members secured to the floor joists underfoot, or by both.

(f) The entire supporting structure shall be securely braced to prevent any horizontal movement.

(g) To prevent their displacement, platform units shall be nailed, bolted, or otherwise secured to outriggers.

(h) Scaffolds and scaffold components shall be designed by a registered professional engineer and shall be constructed and loaded in accordance with such design.

(10) **"Pump jack scaffolds."**

(a) Pump jack brackets, braces, and accessories shall be fabricated from metal plates and angles. Each pump jack bracket shall have two positive gripping mechanisms to prevent any failure or slippage.

(b) Poles shall be secured to the structure by rigid triangular bracing or equivalent at the bottom, top, and other points as necessary. When the pump jack has to pass bracing already installed, an additional brace shall be installed approximately 4 feet (1.2 m) above the brace to be passed, and shall be left in place until the pump jack has been moved and the original brace reinstalled.

WAC 296-155-484 (Cont.)

(c) When guardrails are used for fall protection, a workbench may be used as the toprail only if it meets all the requirements in WAC 296-155-483 (7)(d)(ii), (vii), (viii), and (xiii).

(d) Work benches shall not be used as scaffold platforms.

(e) When poles are made of wood, the pole lumber shall be straight-grained, free of shakes, large loose or dead knots, and other defects which might impair strength.

(f) When wood poles are constructed of two continuous lengths, they shall be joined together with the seam parallel to the bracket.

(g) When two by fours are spliced to make a pole, mending plates shall be installed at all splices to develop the full strength of the member.

(11) **"Ladder jack scaffolds."**

(a) Platforms shall not exceed a height of 20 feet (6.1 m).

(b) All ladders used to support ladder jack scaffolds shall meet the requirements of Part J of this chapter -- Stairways and ladders, except that job-made ladders shall not be used to support ladder jack scaffolds.

(c) The ladder jack shall be so designed and constructed that it will bear on the side rails and ladder rungs or on the ladder rungs alone. If bearing on rungs only, the bearing area shall include a length of at least 10 inches (25.4 cm) on each rung.

(d) Ladders used to support ladder jacks shall be placed, fastened, or equipped with devices to prevent slipping.

(e) Scaffold platforms shall not be bridged one to another.

(12) **"Window jack scaffolds."**

(a) Scaffolds shall be securely attached to the window opening.

(b) Scaffolds shall be used only for the purpose of working at the window opening through which the jack is placed.

(c) Window jacks shall not be used to support planks placed between one window jack and another, or for other elements of scaffolding.

(13) **"Crawling boards (chicken ladders)."**

(a) Crawling boards shall extend from the roof peak to the eaves when used in connection with roof construction, repair, or maintenance.

(b) Crawling boards shall be secured to the roof by ridge hooks or by means that meet equivalent criteria (e.g., strength and durability).

WAC 296-155-484 (Cont.)

(14) **"Step, platform, and trestle ladder scaffolds."**

(a) Scaffold platforms shall not be placed any higher than the second highest rung or step of the ladder supporting the platform.

(b) All ladders used in conjunction with step, platform and trestle ladder scaffolds shall meet the pertinent requirements of Part J of this chapter -- Stairways and ladders, except that job-made ladders shall not be used to support such scaffolds.

(c) Ladders used to support step, platform, and trestle ladder scaffolds shall be placed, fastened, or equipped with devices to prevent slipping.

(d) Scaffolds shall not be bridged one to another.

(15) **"Single-point adjustable suspension scaffolds."**

(a) When two single-point adjustable suspension scaffolds are combined to form a two-point adjustable suspension scaffold, the resulting two-point scaffold shall comply with the requirements for two-point adjustable suspension scaffolds in subsection (16) of this section.

(b) The supporting rope between the scaffold and the suspension device shall be kept vertical unless all of the following conditions are met:

(i) The rigging has been designed by a qualified person; and

(ii) The scaffold is accessible to rescuers; and

(iii) The supporting rope is protected to ensure that it will not chafe at any point where a change in direction occurs; and

(iv) The scaffold is positioned so that swinging cannot bring the scaffold into contact with another surface.

(c) Boatswains' chair tackle shall consist of correct size ball bearings or bushed blocks containing safety hooks and properly "eye-spliced" minimum five-eighth (5/8) inch

(1.6 cm) diameter first-grade manila rope, or other rope which will satisfy the criteria (e.g., strength and durability) of manila rope.

(d) Boatswains' chair seat slings shall be reeved through four corner holes in the seat; shall cross each other on the underside of the seat; and shall be rigged so as to prevent slippage which could cause an out-of-level condition.

(e) Boatswains' chair seat slings shall be a minimum of five-eight (5/8) inch (1.6 cm) diameter fiber, synthetic, or other rope which will satisfy the criteria (e.g., strength, slip resistance, durability, etc.) of first grade manila rope.

(f) When a heat-producing process such as gas or arc welding is being conducted, boatswains' chair seat slings shall be a minimum of three-eight (3/8) inch (1.0 cm) wire rope.

WAC 296-155-484 (Cont.)

(g) Noncross-laminated wood boatswains' chairs shall be reinforced on their underside by cleats securely fastened to prevent the board from splitting.

(16) **"Two-point adjustable suspension scaffolds (swing stages)."** The following requirements do not apply to two-point adjustable suspension scaffolds used as masons' or stonesetters' scaffolds. Such scaffolds are covered by subsection (17) of this section.

(a) Platforms shall not be more than 36 inches (0.9 m) wide unless designed by a qualified person to prevent unstable conditions.

(b) The platform shall be securely fastened to hangers (stirrups) by U-bolts or by other means which satisfy the requirements of WAC 296-155-483(1).

(c) The blocks for fiber or synthetic ropes shall consist of at least one double and one single block. The sheaves of all blocks shall fit the size of the rope used.

(d) Platforms shall be of the ladder-type, plank-type, beam-type, or light-metal type. Light metal-type platforms having a rated capacity of 750 pounds or less and platforms 40 feet (12.2 m) or less in length shall be tested and listed by a nationally recognized testing laboratory.

(e) Two-point scaffolds shall not be bridged or otherwise connected one to another during raising and lowering operations unless the bridge connections are articulated (attached), and the hoists properly sized.

(f) Passage may be made from one platform to another only when the platforms are at the same height, are abutting, and walk-through stirrups specifically designed for this purpose are used.

(17) **"Multi-point adjustable suspension scaffolds, stonesetters' multi-point adjustable suspension scaffolds, and masons' multi-point adjustable suspension scaffolds."**

(a) When two or more scaffolds are used they shall not be bridged one to another unless they are designed to be bridged, the bridge connections are articulated, and the hoists are properly sized.

(b) If bridges are not used, passage may be made from one platform to another only when the platforms are at the same height and are abutting.

(c) Scaffolds shall be suspended from metal outriggers, brackets, wire rope slings, hooks, or means that meet equivalent criteria (e.g., strength, durability).

(18) **"Catenary scaffolds."**

(a) No more than one platform shall be placed between consecutive vertical pickups, and no more than two platforms shall be used on a catenary scaffold.

(b) Platforms supported by wire ropes shall have hook-shaped stops on each end of the platforms to prevent them from slipping off the wire ropes. These hooks shall be so placed that they will prevent the platform from falling if one of the horizontal wire ropes breaks.

(c) Wire ropes shall not be tightened to the extent that the application of a scaffold load will overstress them.

WAC 296-155-484 (Cont.)

(d) Wire ropes shall be continuous and without splices between anchors.

(19) **"Float (ship) scaffolds."**

(a) The platform shall be supported by a minimum of two bearers, each of which shall project a minimum of 6 inches (15.2 cm) beyond the platform on both sides. Each bearer shall be securely fastened to the platform.

(b) Rope connections shall be such that the platform cannot shift or slip.

(c) When only two ropes are used with each float:

(i) They shall be arranged so as to provide four ends which are securely fastened to overhead supports.

(ii) Each supporting rope shall be hitched around one end of the bearer and pass under the platform to the other end of the bearer where it is hitched again, leaving sufficient rope at each end for the supporting ties.

(20) **"Interior hung scaffolds."**

(a) Scaffolds shall be suspended only from the roof structure or other structural member such as ceiling beams.

(b) Overhead supporting members (roof structure, ceiling beams, or other structural members) shall be inspected and checked for strength before the scaffold is erected.

(c) Suspension ropes and cables shall be connected to the overhead supporting members by shackles, clips, thimbles, or other means that meet equivalent criteria (e.g., strength, durability).

(21) **"Needle beam scaffolds."**

(a) Scaffold support beams shall be installed on edge.

(b) Ropes or hangers shall be used for supports, except that one end of a needle beam scaffold may be supported by a permanent structural member.

(c) The ropes shall be securely attached to the needle beams.

(d) The support connection shall be arranged so as to prevent the needle beam from rolling or becoming displaced.

(e) Platform units shall be securely attached to the needle beams by bolts or equivalent means. Cleats and overhang are not considered to be adequate means of attachment.

(22) **"Multi-level suspended scaffolds."**

(a) Scaffolds shall be equipped with additional independent support lines, equal in number to the number of points supported, and of equivalent strength to the suspension ropes, and rigged to support the scaffold in the event the suspension rope(s) fail.

WAC 296-155-484 (Cont.)

(b) Independent support lines and suspension ropes shall not be attached to the same points of anchorage.

(c) Supports for platforms shall be attached directly to the support stirrup and not to any other platform.

(23) **"Mobile scaffolds."**

(a) Scaffolds shall be braced by cross, horizontal, or diagonal braces, or combination thereof, to prevent racking or collapse of the scaffold and to secure vertical members together laterally so as to automatically square and align the vertical members. Scaffolds shall be plumb, level, and squared. All brace connections shall be secured.

(i) Scaffolds constructed of tube and coupler components shall also comply with the requirements of subsection (2) of this section;

(ii) Scaffolds constructed of fabricated frame components shall also comply with the requirements of subsection (3) of this section.

(b) Scaffold casters and wheels shall be locked with positive wheel and/or wheel and swivel locks, or equivalent means, to prevent movement of the scaffold while the scaffold is used in a stationary manner.

(c) Manual force used to move the scaffold shall be applied as close to the base as practicable, but not more than 5 feet (1.5 m) above the supporting surface.

(d) Power systems used to propel mobile scaffolds shall be designed for such use. Forklifts, trucks, similar motor vehicles or add-on motors shall not be used to propel scaffolds unless the scaffold is designed for such propulsion systems.

(e) Scaffolds shall be stabilized to prevent tipping during movement.

(f) Employees shall not be allowed to ride on scaffolds unless the following conditions exist:

(i) The surface on which the scaffold is being moved is within 3 degrees of level, and free of pits, holes, and obstructions;

(ii) The height to base width ratio of the scaffold during movement is two to one or less, unless the scaffold is designed and constructed to meet or exceed nationally recognized stability test requirements such as those listed in (ANSI/SIA A92.5 and A92.6);

(iii) Outrigger frames, when used, are installed on both sides of the scaffold;

(iv) When power systems are used, the propelling force is applied directly to the wheels, and does not produce a speed in excess of 1 foot per second (.3 mps); and

(v) No employee is on any part of the scaffold which extends outward beyond the wheels, casters, or other supports.

(g) Platforms shall not extend outward beyond the base supports of the scaffold unless outrigger frames or equivalent devices are used to ensure stability.

WAC 296-155-484 (Cont.)

(h) Where leveling of the scaffold is necessary, screw jacks or equivalent means shall be used.

(i) Caster stems and wheel stems shall be pinned or otherwise secured in scaffold legs or adjustment screws.

(j) Where uplift may occur, panels shall be locked together vertically by pins or other equivalent means.

(k) Before a scaffold is moved, each employee on the scaffold shall be made aware of the move.

(24) **"Repair bracket scaffolds."**

(a) Brackets shall be secured in place by at least one wire rope at least 1/2 inch (1.27 cm) in diameter.

(b) Each bracket shall be attached to the securing wire rope (or ropes) by a positive locking device capable of preventing the unintentional detachment of the bracket from the rope, or by equivalent means.

(c) Each bracket, at the contact point between the supporting structure and the bottom of the bracket, shall be provided with a shoe (heel block or foot) capable of preventing the lateral movement of the bracket.

(d) Platforms shall be secured to the brackets in a manner that will prevent the separation of the platforms from the brackets and the movement of the platforms or the brackets on a completed scaffold.

(e) When a wire rope is placed around the structure in order to provide a safe anchorage for personal fall arrest systems used by employees erecting or dismantling scaffolds, the wire rope shall meet the requirements of Part C-1 of this chapter, but shall be at least 5/16 inch (0.8 cm) in diameter.

(f) Each wire rope used for securing brackets in place or as an anchorage for personal fall arrest systems shall be protected from damage due to contact with edges, corners, protrusions, or other discontinuities of the supporting structure or scaffold components.

(g) Tensioning of each wire rope used for securing brackets in place or as an anchorage for personal fall arrest systems shall be by means of a turnbuckle at least 1 inch (2.54 cm) in diameter, or by equivalent means.

(h) Each turnbuckle shall be connected to the other end of its rope by use of an eyesplice thimble of a size appropriate to the turnbuckle to which it is attached.

(i) U-bolt wire rope clips shall not be used on any wire rope used to secure brackets or to serve as an anchor for personal fall arrest systems.

(j) The employer shall ensure that materials shall not be dropped to the outside of the supporting structure.

(k) Scaffold erection shall progress in only one direction around any structure.

WAC 296-155-484 (Cont.)

(25) **"Stilts."** Stilts, when used, shall be used in accordance with the following requirements:

(a) An employee may wear stilts on a scaffold only if it is a large area scaffold.

(b) When an employee is using stilts on a large area scaffold where a guardrail system is used to provide fall protection, the guardrail system shall be increased in height by an amount equal to the height of the stilts being used by the employee.

(c) Surfaces on which stilts are used shall be flat and free of pits, holes and obstructions, such as debris, as well as other tripping and falling hazards.

(d) Stilts shall be properly maintained. Any alteration of the original equipment shall be approved by the manufacturer.

[Statutory Authority: Chapter 49.17.010, .040, .050, .060 RCW. 98-05-046 (Order 97-10) § 296-155-484, filed 2/13/98, effective 4/15/98.]

WAC 296-155-485 Reserved.

[Statutory Authority: Chapter 49.17.010, .040, .050, .060 RCW. (98-05-046) (Order 97-10), § 296-155-485, filed 2/13/98, effective 4/15/98. Statutory Authority: RCW 49.17.040, [49.17.]050 and [49.17.]060. 96-24-051, § 296-155-485, filed 11/27/96, effective 2/1/97. Statutory Authority: Chapter 49.17 RCW. 95-10-016, § 296-155-485, filed 4/25/95, effective 10/1/95; 94-15-096 (Order 94-07), 296-155-485, filed 7/20/94, effective 9/20/94; 91-24-017 (Order 91-07), § 296-155-485, filed 11/22/91, effective 12/24/91; 91-03-044 (Order 90-18), § 296-155-485, filed 1/10/91, effective 2/12/91; 90-03-029 (Order 89-20), § 296-155-485, filed 1/11/90, effective 2/26/90. Statutory Authority: RCW 49.17.040 and 49.17.050. 86-03-074 (Order 86-14), § 296-155-485, filed 1/21/86; 82-08-026 (Order 82-10), § 296-155-485, filed 3/30/82. Statutory Authority: RCW 49.17.040, 49.17.150, and 49.17.240. 79-08-115 (Order 79-9), § 296-155-485, filed 7/31/79; Order 76-29, § 296-155-485, filed 9/30/76; Order 76-6, 296-155-485, filed 3/1/76; Order 74-26, § 296-155-485, filed 5/7/74, effective 6/6/74.]

WAC 296-155-487 Manually propelled elevating work platforms.

(1) All applicable rules for design, construction, maintenance, operation, testing and use of manually propelled elevating work platforms shall be in accordance with ANSI A92.3-1990.

(2) General requirements.

(a) Any manually propelled elevating work platform, when raised to its maximum working height, on level ground, shall be capable of sustaining, without reaching instability, a minimum horizontal test force of fifty pounds or fifteen percent of the rated capacity, whichever is greater, applied to any point on the perimeter of the platform while the platform is carrying the rated work load.

(b) Any manually propelled elevating work platform, unless designed for such use by the manufacturer, shall not be used on an inclined surface.

(c) Any work platform designed by the manufacturer to be operated on an inclined surface shall also be capable of passing the stability tests outlined in (a) of this subsection while on such a surface. Procedures for maintaining stability shall be clearly outlined in the special warnings section of the operating instructions and users shall follow these instructions.

(d) If outriggers or stabilizers must be employed to meet the tests for stability outlined in (a) of this subsection, the operating instructions shall require their use and such outriggers or stabilizers shall be provided and used.

(e) The platform width shall not be less than eighteen inches and shall be provided with a surface to minimize slipping.

WAC 296-155-487 (Cont.)

(f) The platform shall be provided with a guardrail or other structure around its upper periphery and the guardrail shall be approximately forty-two inches high, plus or minus three inches, with a midrail approximately midway between the top rail and the platform surface.

(i) The guardrail system shall be designed and constructed to withstand a load of twenty-five pounds per linear foot applied in a horizontal direction to the top rail or midrail.

(ii) The top rail or midrail shall withstand a concentrated load of three hundred pounds applied vertically to the top of either rail midway between the supporting posts.

(iii) Guardrail terminal posts shall withstand two hundred pounds applied in any direction at the top of the post.

(g) The platform shall be provided with four-inch (nominal dimension) toeboards on all sides.

(h) Toeboards may be omitted at the access openings.

(i) The configuration of the work platform shall include access for personnel to use in reaching the platform deck when it is in the lowered position.

(i) Any access system used in this way shall have rungs or steps located on uniform centers not to exceed sixteen inches.

(ii) Steps or rungs shall be provided with a face that minimizes slipping.

(3) Safety factor specifications.

(a) Where the platform is supporting its rated work load by a system of wire ropes or chains, or both, the safety factor of the wire rope or chain shall not be less than eight to one, based on ultimate strength.

(b) All critical components of a hydraulic or pneumatic system used in a work platform shall have a bursting strength that exceeds the pressure attained when the system is subjected to the equivalent of four times the rated work load. (Critical components are those in which failure would result in a free descent.)

(c) All noncritical hydraulic components shall have a bursting strength safety factor of at least two to one.

(4) Fail safe requirements.

(a) Where the elevation of the platform is accomplished by an electromechanical assembly, the system shall be designed to prevent free descent in the event of a generator or power failure.

(b) Where the elevation of the platform is accomplished by a hydraulic or pneumatic cylinder assembly, the system shall be so equipped as to prevent free descent in the event of failure of a hydraulic or pneumatic line.

(c) Where the platform is horizontally extendable beyond the base of the machine, the system shall be so equipped as to prevent descent in the event of failure of a hydraulic or pneumatic line, wire rope, or chain.

WAC 296-155-487 (Cont.)

(d) Where the elevation of the platform is accomplished by a single hoist cable, the system shall be protected by a broken-cable safety device which will prevent free descent of the platform.

(e) Where the elevation of the platform is accomplished by a manual-mechanical or manual-hydraulic assembly, the considerations established above shall apply.

(f) The control system shall be designed so that a single malfunction in the control system will not result in unintended machine motion.

(g) Hydraulically or pneumatically actuated outriggers or stabilizers, or both, shall be so constructed as to prevent their retraction in the event of failure of a hydraulic or pneumatic line.

(5) Emergency lowering means. Any work platform equipped with a powered elevating assembly shall be supplied with clearly marked emergency lowering means readily accessible from ground or floor level.

(6) Guarding. Mechanical power transmission apparatus shall be guarded in accordance with

WAC 296-24-205, General safety and health standards.

(7) Directional controls.

(a) All directional controls shall be marked for the direction they control and shall be of the type which automatically returns to the “off” or the neutral position when released.

(b) Controls shall be protected against inadvertent operation.

(8) Motor requirements.

(a) Fuel lines of internal-combustion-engine-powered work platforms shall be supported to minimize chafing and positioned to minimize exposure to engine exhaust heat. Liquid fuel lines shall be hard lines except where isolation from vibration requires a flexible connection.

(b) LP-gas engine fuel systems shall comply with the American National Standard for Storage and Handling of Liquified Petroleum Gases, ANSI/NFPA 58-1995.

(c) The exhaust system shall be provided with a muffler that is positioned to minimize exposure to noise and exhaust gas of the operators and personnel located in proximity to the unit.

(9) Prevention of lateral movement. Each work platform shall be provided with locking screws, floor locks, wheel-locking mechanisms, or other means of preventing unintended lateral motions while in use.

(10) Specifications display. The following information shall be displayed on all work platforms in as permanent and as visible a manner as practical:

(a) Warnings, cautions, or restrictions for safe operation in accordance with American National Standard Specifications for Accident Prevention Signs, ANSI Z535.2-1991.

(b) Make, model, serial number, and manufacturer's name and address.

(c) Rated work load.

WAC 296-155-487 (Cont.)

(d) Maximum platform height.

(e) Nominal voltage rating of batteries or rated voltage of AC line.

(f) Statement of the need for the operator's familiarity with the work platform before it is used.

(11) Alternative configuration statement. When a work platform is designed with alternative configurations:

(a) The manufacturer shall clearly describe these alternatives, including the rated capacity in each situation.

(b) If the rated work load of a platform is the same in any designed configuration, these additional descriptions are not necessary.

(12) Insulation marking. A statement of whether or not the work platform is electrically insulated. If insulated, the level of protection and the applicable test standard shall be stated in accordance with ANSI A92.2-1990.

(13) Maintenance and operating manuals requirement. An operating and maintenance manual(s) shall be provided with each work platform and shall contain:

(a) Descriptions, specifications, and ratings of the work platform, including the data specified in subsection (10) of this section.

(b) The maximum hydraulic and pneumatic systems pressure and the maximum voltage of the electrical systems which are part of the work platform.

(c) Instructions regarding operation and maintenance.

(d) Replacement part(s) information.

(14) Rated load display. The rated work load shall be clearly displayed at each entrance to the work platform.

(15) Management responsibilities.

(a) Employers responsibilities shall be in accordance with ANSI A92.3-1990.

(b) Only trained and authorized personnel shall be permitted to operate the work platform.

(c) Work platforms that are not in safe operating condition shall be removed from service until repaired.

(d) Repairs shall be made by a qualified person in conformance with the manufacturer's operating and maintenance manuals.

(e) Operators shall be trained in care and use before operation, care and use during operation, horizontal relocation, and additional requirements as specified in ANSI A92.3-1990.

(f) Modifications or alterations of work platforms shall be made only with written permission of the manufacturer or any other equivalent entity.

[Statutory Authority: Chapter 49.17.010, .040, .050, .060 RCW. 98-05-046 (Order 97-10), § 296-155-487, filed 2/13/98, effective 4/15/98.]

WAC 296-155-488 Self propelled elevating work platforms.

(1) All applicable rules for design, construction, maintenance, operation, testing and use of self propelled elevating work platforms shall be in accordance with ANSI A92.6-1990.

(2) Minimum rated work load.

(a) The minimum rated work load of work platforms shall not be less than two hundred fifty pounds.

(b) All structural load-supporting elements of the work platform shall have a structural safety factor of not less than two based on the minimum yield strength of the material.

(c) All structural load-supporting elements of the work platform that are made of nonductile material (such as cast iron and fiberglass) shall have a structural safety factor of not less than five based on the minimum ultimate strength of the material.

(d) Design and stability tests shall be in accordance with ANSI A92.6-1990.

(e) Each production unit on level ground shall sustain a load test with a platform load at least one hundred fifty percent of the rated capacity imposed. The test shall include the movement of the platform through its entire range of motion.

(3) Driving interlock.

(a) The unit shall use interlock means that will prevent driving the unit unless the platform height, platform configuration, or any combination of these, are adjusted to meet the stability test requirements.

(b) A work platform limited in driveable height by the interlock means may be elevated and used while stationary up to the maximum platform heights at which it will maintain stability during the following static test. At the maximum platform height, on level ground, with the platform carrying the rated work load, apply a horizontal test force of one hundred fifty pounds or fifteen percent of the rated platform load (whichever is greater) at the point on the perimeter of the platform most likely to cause overturning.

(4) Platform outrigger interlocks. Where outriggers, stabilizers, or extendable axles are required to meet the side load test, interlocks shall prevent the platform from being raised above the height at which these devices are required unless the required devices are extended. Interlocks shall also prevent the retraction of these devices while the platform is above that level.

(5) Platform requirement.

(a) A guardrail or other structure shall be provided around its upper periphery, which shall be approximately forty-two inches plus or minus three inches in height, a midrail, and toeboards which shall be not less than four inches high (nominal dimension). Guardrail and midrail chains, or the equivalent, may be substituted across an access opening. Toeboards may be omitted at the access opening.

(b) The work platform shall have a minimum width of eighteen inches. Proper access shall be provided for personnel to use in reaching the platform deck when it is in the lowered position.

(c) A floor surface shall be provided for both the platform and the access that will minimize slipping.

WAC 296-155-488 (Cont.)

(6) System safety factors.

(a) When the platform supports its rated work load by a system of wire ropes or chains, or both, the safety factor of the wire rope or chains shall not be less than eight to one, based on ultimate strength.

(b) All critical hydraulic components, all pneumatic components, and all hoses of hydraulic or pneumatic systems shall have a minimum bursting strength of at least four times the operating pressure for which the system is designed.

(c) Noncritical hydraulic components shall have a minimum bursting strength of at least twice the operating pressure for which the system is designed.

(7) Safety design requirements.

(a) Where the elevation of the platform is accomplished by an electromechanical assembly, the system shall be designed to prevent free descent in the event of a generator or power failure.

(b) Where the elevation of the platform is accomplished by a hydraulic or pneumatic cylinder assembly, the system shall be so equipped as to prevent free descent in the event of a hydraulic or pneumatic line failure.

(c) Where the platform is horizontally extendable beyond the base of the machine, the system shall be so equipped as to prevent descent in the event of a hydraulic or pneumatic line failure.

(d) Where the elevation of the platform is accomplished by a single hoist cable, the system shall be protected by a broken-cable safety device that will prevent free descent of the platform.

(e) In addition to the primary operator controls, the work platform shall be equipped with an emergency stop device located at the primary control station that will deactivate all powered functions.

(f) Hydraulically or pneumatically actuated outriggers or stabilizers, or both, shall be designed to prevent their retraction in the event of a hydraulic or pneumatic line failure.

(g) Any work platform equipped with a powered elevating assembly shall be supplied with clearly marked emergency lowering means readily accessible from ground level.

(h) Mechanical power transmission apparatus shall be guarded in accordance with

WAC 296-24-205, General safety and health standards.

(8) Directional controls.

(a) Directional controls shall move in the direction of the function they control. The controls shall be of the type that automatically return to the off or the neutral position when released.

(b) Such controls shall be protected against inadvertent operation and shall be clearly marked.

WAC 296-155-488 (Cont.)

(9) Engine requirement.

(a) Fuel lines of internal-combustion-engine-powered work platforms shall be supported to keep chafing to a minimum. They shall be located to keep exposure to engine and exhaust heat to a minimum.

(b) Liquid fuel lines shall be hard except where flexible connections are required for isolation from vibration.

(c) LP gas fuel systems shall use flexible LP gas hose or hard lines.

(d) Exhaust lines shall be equipped with mufflers. The lines shall be located to minimize the exposure of noise and fumes to operators and personnel near the units.

(10) Each work platform shall be equipped with a mechanical parking brake, which will hold the unit on any slope it is capable of climbing. Wheel chocks shall be installed before using an aerial lift on an incline, provided they can be safely installed.

(11) Specifications display. The following information shall be displayed on all work platforms in a clearly visible, accessible area and in as permanent a manner as possible:

(a) Warnings, cautions, or restrictions for safe operation in accordance with ANSI Z535.2-1991.

(b) Make, model, serial number, and manufacturer's name and address.

(c) Rated work load.

(d) Maximum platform height.

(e) Nominal voltage of the batteries if battery powered.

(f) A notice to study the operating/maintenance manual before using the equipment.

(g) Alternative configuration statement. If a work platform is susceptible to several alternative configurations, then the manufacturer shall clearly describe these alternatives, including the rated capacity in each situation. If the rated work load of a work platform is the same in any configuration, these additional descriptions are not necessary.

(h) A clear statement of whether or not the platform and its enclosure are electrically insulated. If insulated, the level of protection and the applicable test standard shall be stated, in accordance with ANSI 92.2-1990.

(i) The rated work load shall be clearly displayed at each entrance to the platform.

(12) Lift manual requirement. Each work platform shall be provided with an appropriate manual. The manual shall contain:

(a) Descriptions, specifications, and ratings of the work platform, including the data specified in subsection (11)(h) and (i) of this section.

WAC 296-155-488 (Cont.)

(b) The maximum system pressure and the maximum voltage of the electrical systems that are part of the work platform.

(c) Instructions regarding operation, maintenance, and weld specifications.

(d) Replacement parts information.

(13) Inspection and maintenance.

(a) Each work platform shall be inspected, maintained, repaired and kept in proper working order in accordance with the manufacturer's maintenance and repair manuals.

(b) Any work platform not in safe operating condition shall be removed from service until it is repaired.

(c) All repairs shall be made by a qualified service person in conformance with the manufacturer's maintenance and repair manuals.

(14) Operator requirements. Only trained and authorized personnel shall be permitted to operate the work platform. Before using the work platform, the operator shall:

(a) Read and understand the manufacturer's operating instructions and safety rules, and be trained by a qualified person on the contents of the manufacturer's instructions and safety rules.

(b) Read and understand all decals, warnings, and instructions on the work platform.

(c) On a daily basis, before the work platform is used, it shall be given a thorough inspection, which shall include:

(i) Inspection for defects such as cracked welds, hydraulic leaks, damaged control cable, loose wire connections, and tire damage.

(ii) Inspection of functional controls for proper operation.

(d) Any suspect items discovered through inspection shall be carefully examined and a determination made by a qualified service person as to whether they constitute a safety hazard. All unsafe items shall be corrected before further use of the work platform.

(e) Before the work platform is used, the operator shall survey the area for hazards such as:

(i) Untamped earth fills.

(ii) Ditches.

(iii) Dropoffs or holes.

(iv) Bumps and floor obstructions.

(v) Debris.

(vi) Overhead obstructions and high-voltage conductors.

WAC 296-155-488 (Cont.)

(vii) Other possible hazardous conditions.

(15) Requirement for operations. The work platform shall be used only in accordance with the Manufacturer's Operating Instructions and Safety Rules, ANSI A92.6-1990, and this standard.

(a) Only trained and authorized personnel shall be permitted to operate the work platform.

(b) Before each elevation of the work platform, the operator shall:

(i) Check for overhead obstructions and high-voltage conductors. A minimum distance of ten feet from energized high-voltage conductors shall be maintained at all times between the conductors and the operator and platform equipment.

(ii) Ensure that the work platform is elevated only on a firm and level surface.

(iii) Ensure that the load and its distribution on the platform are in accordance with the manufacturer's rated capacity. The manufacturer's recommended load limits shall never be exceeded.

(iv) Ensure that outriggers and stabilizers are used if the manufacturer's instructions require their use.

(v) Ensure that guardrails are properly installed, and gates or openings are closed.

(c) Before and during driving while the platform is elevated, the operator shall:

(i) Be required to look in the direction of, and keep a clear view of, the path of travel and assure that the path of travel is firm and level.

(ii) Maintain a safe distance from obstacles, debris, dropoffs, holes, depressions, ramps, or other hazards to safe elevated travel.

(iii) Maintain a safe distance from overhead obstacles.

(d) The operator shall limit travel speed according to conditions. Conditions to be observed are: Ground surface, congestion, slope, location of personnel, and other factors that may create a hazard of collision or injury to personnel.

(e) Stunt driving and horseplay shall not be permitted.

(f) Personnel shall maintain a firm footing on the platform while working thereon unless they are secured by safety harness and lanyard devices fixed to manufacturer-approved hard points. Use of railings or planks, ladders or any other device on the work platform for achieving additional height shall be prohibited.

(g) The operator shall immediately report defects or malfunctions which become evident during operation and shall stop use of the work platform until correction has been made.

(h) Altering or disabling of safety devices or interlocks shall be prohibited.

WAC 296-155-488 (Cont.)

(i) Care shall be taken to prevent ropes, electric cords, hoses, etc., from tangling with the work platform when the platform is being elevated, lowered, or moved.

(j) Work platform rated capacities shall not be exceeded when loads are transferred to the platform at elevated heights.

(k) The operator shall ensure that the area surrounding the work platform is clear of personnel and equipment before lowering the platform.

(16) Fuel tanks shall not be filled while the engine is running. Spillage shall be avoided.

(17) Batteries shall not be charged except in an open, well-ventilated area, free of flame, smoking, spark, or fire.

(18) Modifications. All modifications and alterations to work platforms shall be certified in writing as being in conformance with ANSI A92.6-1990 by the manufacturer or any equivalent entity, such as a nationally recognized testing laboratory.

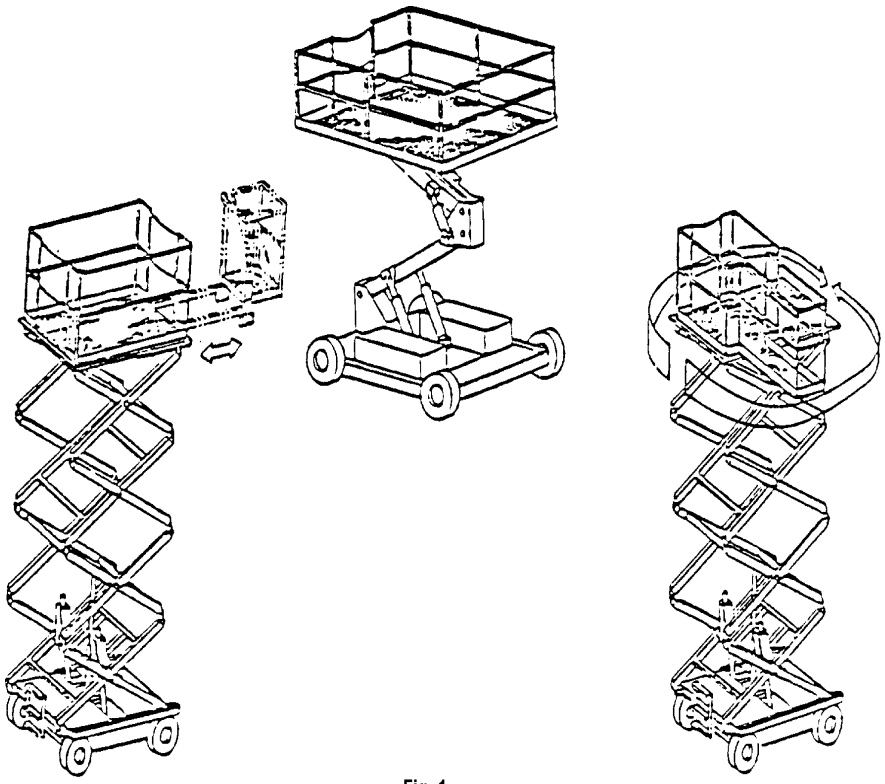

Fig. 1
Examples of Work Platforms

[Statutory Authority: Chapter 49.17.010, .040, .050, .060 RCW. 98-05-046 (Order 97-10, § 296-155-488, filed 2/13/98, effective 4/15/98.]

WAC 296-155-489 Boom supported elevating work platforms.

(1) All applicable rules for design, construction, maintenance, operation, testing and use of boom supported elevating work platforms shall be in accordance with ANSI A92.5-1992.

(2) Minimum rated work load. The minimum rated work load of a work platform shall be three hundred pounds. Either single or multiple ratings may be used.

(a) Work platforms with single ratings shall include means which clearly present the rated work load to the operator at the platform control station.

(b) Work platforms having multiple configurations with multiple ratings shall have means which clearly describe the rated work load of each configuration to the operator at the platform control station. Examples of multiple configurations are:

(i) Outriggers extended to firm footing versus outriggers not extended.

(ii) Large platform versus small platform.

(iii) Extendable boom retracted versus extended.

(iv) Boom elevated versus lowered.

(v) Extendable axles extended versus retracted.

(3) Boom angle indicator: When the rated capacity of the alternate configuration depends on the angle the boom makes with the horizontal, the manufacturer shall install means by which that angle can be determined. Such means shall be clearly displayed to the operator at the platform control station.

(4) Structural safety.

(a) All load-supporting structural elements of the work platform shall have a structural safety factor of not less than two to one based on the minimum yield strength of the materials used.

(b) The load-supporting structural elements of the work platform that are made of nonductile material which will not deform plastically before breaking shall have a structural safety factor of not less than five to one based on the minimum ultimate strength of the materials used.

(c) The design stress used in determining the structural safety factor shall be the maximum stresses developed within the element with the machine operating at its rated work load, used in the type of service for which it was designed, and operated in accordance with manufacturer's operation instructions.

(d) The design stress shall include the effects of stress concentration and dynamic loading as shown in ANSI A92.5-1992.

(5) Platform stability.

(a) Each work platform shall be capable of maintaining stability while sustaining a static load equal to one and one-third times its rated work load, concentrated anywhere twelve inches inside the perimeter of the platform, throughout its entire range of motion while on a slope of five degrees from the horizontal in the direction most likely to cause overturning.

WAC 296-155-489 (Cont.)

(i) If having the outriggers, stabilizers, or extendable axles in contact with the supporting surface is part of the normal configuration to meet the stability requirements, they shall be extended.

(ii) A visual inspection shall be made to determine whether this test has produced an adverse effect on any component.

(b) Each work platform shall sustain on level ground a test load equal to one and one-half times its rated work load throughout the entire range of motion in which the boom can be placed.

(i) The test load shall be placed with its center of gravity twelve inches inboard from the guardrail while the unit is in the least stable position.

(ii) The work platform shall remain stable during this test.

(iii) A visual inspection shall be made to determine whether this test has produced an adverse effect on any component.

(c) Each work platform shall be capable of maintaining stability when positioned on a five degree slope in its backward stability configuration in the direction and condition most likely to cause overturning, while sustaining a horizontal force of one hundred fifty pounds or fifteen percent of rated capacity, whichever is greater, applied to the upper perimeter of the platform in the direction most likely to cause overturning (see Fig. 1).

Note that the most adverse condition may be with zero or with rated work load (concentrated one foot inside perimeter of platform), depending on basket configuration.

(i) If having the outriggers, stabilizers, or extendable axles in contact with the supporting surface is part of the normal configuration to meet stability requirements, they shall be extended.

(ii) A visual inspection shall be made to determine whether this test has produced an adverse effect on any component.

WAC 296-155-489 (Cont.)

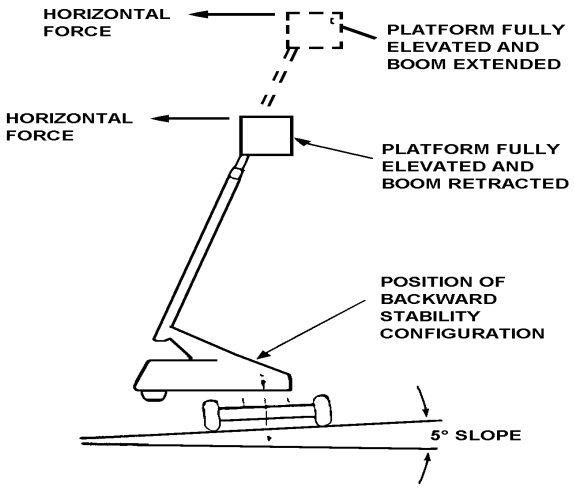

(6) Work platform design requirement. The work platform shall be provided with a guardrail or other structure approximately forty-two inches plus or minus three inches high around its upper periphery, with a midrail, and with toeboards not less than four inches high. Guardrails and midrail chains or the equivalent may be substituted across an access opening.

(a) All stepping, standing, and working surfaces shall be skid resistant.

(b) Attachment points shall be provided for a body belt and lanyard for each person occupying the platform.

(7) Work platform controls. Work platforms shall have both primary and secondary controls.

(a) Primary controls shall be readily accessible to the operator on the platform.

(b) Secondary controls shall be designed to override the primary controls and shall be readily accessible from ground level.

(c) Both primary and secondary controls shall be clearly marked, using permanent legible identification which can be easily understood.

(d) All directional controls shall move in the direction of the function which they control when possible, and shall be of the type which automatically returns to the “off” or the neutral position when released.

(e) Such controls shall be protected against inadvertent operation.

WAC 296-155-489 (Cont.)

(8) Outrigger interlocks. Where the work platform is equipped with outriggers, stabilizers, or extendable axles, interlocks shall be provided to ensure that the platform cannot be positioned beyond the maximum travel height unless the outriggers, stabilizers, or extendable axles are properly set. Control circuits shall ensure that the driving motor(s) cannot be activated unless the outriggers or stabilizers are disengaged and the platform has been lowered to the maximum travel height (MTH).

(9) Auxiliary operating means: All work platforms shall be provided with an auxiliary means of lowering, retracting, and rotating in the event of primary power loss.

(10) Emergency stop: All work platforms shall be equipped with an emergency stop device, readily accessible to the operator, which will effectively de-energize all powered systems in case of a malfunction.

(11) Tilt alarm: All work platforms shall be fitted with an alarm or other suitable warning at the platform, which will be activated automatically when the machine base is more than five degrees out of level in any direction.

(12) System safety factors.

(a) Where the platform is supporting its rated work load by a system of wire ropes or lift chains, or both, the safety factor of the wire rope or chain shall not be less than eight to one, based on ultimate strength.

(b) All critical components and hoses of hydraulic and pneumatic systems shall have a minimum bursting strength of four times the operating pressure for which the system is designed.

(c) Noncritical components shall have a minimum bursting strength of two times the operating pressure for which the system is designed.

(d) Critical components are defined as those in which a malfunction would result in a free descent of the platform.

(13) Failsafe requirements.

(a) Where the elevation of the platform is accomplished by an electromechanical assembly, the system shall be so designed as to prevent free descent in the event of a generator or power failure.

(b) Where the elevation of the platform is accomplished by a hydraulic or pneumatic cylinder assembly, the system shall be so equipped as to prevent free descent in the event a hydraulic or pneumatic line bursts.

(c) Hydraulically or pneumatically actuated outriggers or stabilizers, or both, shall be so designed as to prevent their retraction in the event a hydraulic or pneumatic line bursts.

(14) Engine requirement.

(a) Fuel lines of internal-combustion-engine-powered work platforms shall be supported to keep chafing to a minimum and located to keep exposure to engine and exhaust heat to a minimum.

(b) Liquid fuel lines shall be hard except where flexible connections are required for isolation from vibration.

WAC 296-155-489 (Cont.)

(c) LP gas fuel systems shall use flexible LP gas hose or hard lines.

(d) Exhaust lines shall be equipped with mufflers and shall be located to minimize the exposure to noise and fumes of operators and personnel located in the proximity of such units.

(15) Specifications display. There shall be displayed on all work platforms, in a permanent manner, at a readily visible location, the following information:

(a) Special warnings, cautions, or restrictions necessary for safe operation in accordance with ANSI Z535.2-1991.

(b) Make, model, serial number, and manufacturer's name and address.

(c) Rated work load.

(d) Maximum platform height and maximum travel height.

(e) Reference to studying operating instructions in manual before use.

(f) Alternative configuration statement. If a work platform is capable of several alternative configurations and loads, the alternatives shall be clearly described.

(g) A clear statement of whether or not the platform and its enclosure are electrically insulated. If they are electrically insulated, the voltage at which the platform is rated and the applicable test standard shall be stated.

(h) The rated work load shall be clearly displayed at each entrance to the platform and the operator control station.

(16) Lift manual requirements. Each work platform shall be provided with a manufacturer's manual(s) containing the following information:

(a) Descriptions, specifications, and ratings of the work platform, including the data specified in subsection (17) of this section.

(b) The maximum hydraulic operating pressure and the maximum voltage of the electrical systems which are part of the platform.

(c) Instructions regarding operation, safety rules, maintenance, and repair.

(d) Replacement parts information.

(17) Inspection and maintenance.

(a) Each work platform shall be inspected, maintained, repaired, and kept in proper working condition in accordance with the manufacturer's maintenance and repair manuals.

(b) Any work platform found not to be in safe operating condition shall be removed from service until repaired.

WAC 296-155-489 (Cont.)

(c) All repairs shall be made by a qualified person in conformance with the manufacturer's maintenance and repair manual(s).

(18) Operator requirements. Only trained and authorized persons shall be permitted to operate the work platform. Before using the work platform, the operator shall:

(a) Be instructed by a qualified person in the intended purpose and function of each of the controls.

(b) Read and understand the manufacturer's operating instructions and safety rules, or be trained by a qualified person on the contents of the manufacturer's operating instructions and safety rules.

(c) Understand by reading or by having a qualified person explain all decals, warnings, and instructions displayed on the work platform.

(d) Prior to use on each work shift, the work platform shall be inspected for defects that would affect its safe operation and use. The inspection shall consist of the following:

(i) Visual inspection for cracked welds or other structural defects, hydraulic leaks, damaged control cables, loose wire connections, and tire damage.

(ii) Function test of the operating controls to ensure that they perform their intended functions. Any suspect items shall be carefully examined and a determination made by a qualified person as to whether they constitute a safety hazard. All unsafe items shall be corrected before further use of the work platform.

(iii) Before the work platform is used and during use, the job site shall be checked for hazards such as ditches, dropoffs or holes, bumps and floor obstructions, debris, overhead obstructions and high-voltage conductors, and other possible hazardous conditions.

(19) Requirements for operation. The work platform shall be used only in accordance with the manufacturer's operating instructions and safety rules, ANSI 92.6-1990 and this standard.

(a) Only trained and authorized personnel shall be permitted to operate the work platform.

(b) Before each elevation of the work platform, the operator shall:

(i) Check for overhead obstructions and high-voltage conductors. A minimum distance of ten feet from energized high-voltage conductors shall be maintained at all times between the conductors and the operator and platform equipment.

(ii) Ensure the work platform is elevated only on a firm and level surface.

(iii) Ensure that the load and its distribution on the platform are in accordance with the manufacturer's rated capacity. The manufacturer's rated work load shall never be exceeded.

(iv) Ensure that outriggers or stabilizers are used in accordance with manufacturer's instructions. Wheel chocks shall be installed before using an aerial lift on an incline, provided they can be safely installed.

WAC 296-155-489 (Cont.)

(v) Ensure that platform guardrails are properly installed and gates or openings are closed.

(vi) Check to see that all occupants' full body harnesses are on and properly attached.

(c) Before and during driving while elevated, the operator shall:

(i) Be required to look in the direction of, and keep a clear view of, the path of travel and make sure that the path is firm and level.

(ii) Maintain a safe distance from obstacles, debris, dropoffs, holes, depressions, ramps, and other hazards to safe elevated travel.

(iii) Maintain a safe distance from overhead obstacles.

(d) Under all travel conditions the operator shall limit speed according to conditions of ground surface, congestion, slope, location of personnel, and other factors which may create a hazard of collision or injury to personnel.

(e) Stunt driving and horseplay shall not be permitted.

(f) Personnel shall maintain a firm footing on the platform while working thereon. Safety harness and lanyard devices fixed to attachment points provided and approved by the manufacturer shall be used by all occupants. Use of railings, planks, ladders, or any other device on the work platform for achieving additional height shall be prohibited.

(g) The operators shall immediately report to their supervisor any defects or malfunctions which become evident during operation. Any defects or malfunctions that affect the safety of operation shall be repaired prior to continued use of the work platform.

(h) Altering, modifying, or disabling safety devices or interlocks is prohibited.

(i) Care shall be taken to prevent ropes, electric cords, hoses, and the like from becoming entangled in the work platform when it is being elevated, lowered, or moved.

(j) Work platform rated capacities shall not be exceeded when live loads are transferred to the platform at elevated heights.

(k) The operator shall ensure that the area surrounding the work platform is clear of personnel and equipment before lowering the platform.

(20) Refueling: Fuel tanks shall not be filled while the engine is running. Caution shall be used while filling tanks to avoid spilling fuel.

(21) Battery charging: Batteries shall not be charged except in an open, well ventilated area free of flame, smoking, spark, and fire.

(22) Modifications: There shall be no modification or alteration to work platforms without the modifications being approved and certified in writing by the manufacturer or other equivalent entity, such as a nationally recognized testing laboratory, to be in conformance with all applicable provisions of ANSI A92.5-1992 and this standard.

[Statutory Authority: Chapter 49.17.010, .040, .050, .060 RCW. 98-05-046 (Order 97-10, § 296-155-489, filed 2/13/98, effective 4/15/98.]

WAC 296-155-490 Aerial lifts.

(1) **"General requirements."**

(a) Unless otherwise provided in this section, aerial lifts acquired for use on or after January 22, 1973, shall be designed and constructed in conformance with the applicable requirements of the American National Standards for "Vehicle Mounted Elevating and Rotating Work Platforms," ANSI A92.2-1969, including appendix. Aerial lifts acquired before January 22, 1973, which do not meet the requirements of ANSI A92.2-1969, may not be used after January 1, 1976, unless they shall have been modified so as to conform with the applicable design and construction requirements of ANSI A92.2-1969. Aerial lifts include the following types of vehicle-mounted aerial devices used to elevate personnel to job-sites above ground:

(i) Extensible boom platforms;

(ii) Aerial ladders;

(iii) Articulating boom platforms;

(iv) Vertical towers; and

(v) A combination of any such devices. Aerial equipment may be made of metal, wood, fiberglass reinforced plastic (FRP), or other material; may be powered or manually operated; and are deemed to be aerial lifts whether or not they are capable of rotating about a substantially vertical axis.

(b) Aerial lifts may be "field modified" for uses other than those intended by the manufacturer provided the modification has been certified in writing by the manufacturer or by any other equivalent entity, such as a nationally recognized testing laboratory, to be in conformity with all applicable provisions of ANSI A92.2-1969 and this section and to be at least as safe as the equipment was before modification.

(2) **"Specific requirements."**

(a) Ladder trucks and tower trucks:

(i) Aerial ladders shall be secured in the lower traveling position by the locking device on top of the truck cab, and the manually operated device at the base of the ladder before the truck is moved for highway travel.

(ii) A full body harness shall be worn and a lanyard attached to the ladder rail or tower when working from ladder trucks or tower trucks.

(b) Extensible and articulating boom platforms.

(i) Lift controls shall be tested each day prior to use to determine that such controls are in safe working condition.

(ii) Only authorized persons shall operate an aerial lift.

(iii) Belting off to an adjacent pole, structure, or equipment while working from an aerial lift shall not be permitted.

WAC 296-155-490 (Cont.)

(iv) Employees shall always stand firmly on the floor of the basket, and shall not sit or climb on the edge of the basket or use planks, ladders, or other devices for a work position.

(v) A full body harness shall be worn and a lanyard attached to the boom or basket when working from an aerial lift.

(vi) Boom and basket load limits specified by the manufacturer shall not be exceeded.

(vii) The brakes shall be set and when outriggers are used, they shall be positioned on pads or a solid surface. Wheel chocks shall be installed before using an aerial lift on an incline, provided they can be safely installed.

(viii) An aerial lift truck shall not be moved when the boom is elevated in a working position with men in the basket, except for equipment which is specifically designed for this type of operation in accordance with the provisions of subsection (1)(a) and (b) of this section.

(ix) Articulating boom and extensible boom platforms, primarily designed as personnel carriers, shall have both platform (upper) and lower controls. Upper controls shall be in or beside the platform within easy reach of the operator. Lower controls shall provide for overriding the upper controls. Controls shall be plainly marked as to their function. Lower level controls shall not be operated unless permission has been obtained from the employee in the lift, except in case of emergency.

(x) Climbers shall not be worn while performing work from an aerial lift.

(xi) The insulated portion of an aerial lift shall not be altered in any manner that might reduce its insulating value.

(xii) Before moving an aerial lift for travel, the boom(s) shall be inspected to see that it is properly cradled and outriggers are in stowed position except as provided in (b)(viii) of this subsection.

(c) Electrical tests. All electrical tests shall conform to the requirements of ANSI A92.2-1990 section 5. However equivalent d.c. voltage tests may be used in lieu of the a.c. voltage specified in A92.2-1990; d.c. voltage tests which are approved by the equipment manufacturer or equivalent entity shall be considered an equivalent test for the purpose of this subsection (2)(c).

(d) Bursting safety factor. The provisions of the American National Standards Institute standard ANSI A92.2-1990, section 4.9 Bursting Safety Factor shall apply to all critical hydraulic and pneumatic components. Critical components are those in which a failure would result in a free fall or free rotation of the boom. All noncritical components shall have a bursting safety factor of at least 2 to 1.

(e) Welding standards. All welding shall conform to the following standards as applicable:

(i) Standard Qualification Procedure, AWS B3.0-41.

(ii) Recommended Practices for Automotive Welding Design, AWS D8.4-61.

WAC 296-155-490 (Cont.)

Note: Nonmandatory Appendix C to this part lists examples of national consensus standards that are considered to provide employee protection equivalent to that provided through the application of ANSI A92.2-1990, where appropriate. Copies may be obtained from the American National Standards Institute.

[Statutory Authority: Chapter 49.17.010, .040, .050, .060 RCW. 98-05-046 (Order 97-10), § 296-155-490, filed 2/13/98, effective 4/15/98.]

WAC 296-155-493 Training. This section supplements and clarifies the requirements of WAC 296-155-100 (1)(c) and 296-155-110 (3)(g) as these relate to the hazards of work on scaffolds.

(1) The employer shall have each employee who performs work while on a scaffold trained by a person qualified in the subject matter to recognize the hazards associated with the type of scaffold being used and to understand the procedures to control or minimize those hazards. The training shall include the following areas, as applicable:

(a) The nature of any electrical hazards, fall hazards and falling object hazards in the work area;

(b) The correct procedures for dealing with electrical hazards and for erecting, maintaining, and disassembling the fall protection systems and falling object protection systems being used;

(c) The proper use of the scaffold, and the proper handling of materials on the scaffold;

(d) The maximum intended load and the load-carrying capacities of the scaffolds used; and

(e) Any other pertinent requirements of this subpart.

(2) The employer shall have each employee who is involved in erecting, disassembling, moving, operating, repairing, maintaining, or inspecting a scaffold trained by a competent person to recognize any hazards associated with the work in question. The training shall include the following topics, as applicable:

(a) The nature of scaffold hazards;

(b) The correct procedures for erecting, disassembling, moving, operating, repairing, inspecting, and maintaining the type of scaffold in question;

(c) The design criteria, maximum intended load-carrying capacity and intended use of the scaffold;

(d) Any other pertinent requirements of this subpart.

(3) When the employer has reason to believe that an employee lacks the skill or understanding needed for safe work involving the erection, use or dismantling of scaffolds, the employer shall retrain each such employee so that the requisite proficiency is regained. Retraining is required in at least the following situations:

(a) Where changes at the worksite present a hazard about which an employee has not been previously trained; or

(b) Where changes in the types of scaffolds, fall protection, falling object protection, or other equipment present a hazard about which an employee has not been previously trained; or

(c) Where inadequacies in an affected employee's work involving scaffolds indicate that the employee has not retained the requisite proficiency.

[Statutory Authority: Chapter 49.17.010, .040, .050, .060 RCW. 98-05-046 (Order 97-10), § 296-155-493, filed 2/13/98, effective 4/15/98.]

WAC 296-155-494 Non-Mandatory Appendix A to Part J-1, Scaffold Specifications. This Appendix provides non-mandatory guidelines to assist employers in complying with the requirements of Part J-1 of this chapter. An employer may use these guidelines and tables as a starting point for designing scaffold systems. However, the guidelines do not provide all the information necessary to build a complete system, and the employer is still responsible for designing and assembling these components in such a way that the completed system will meet the requirements of WAC 296-155-483(1). Scaffold components which are not selected and loaded in accordance with this Appendix, and components for which no specific guidelines or tables are given in this Appendix (e.g., joints, ties, components for wood pole scaffolds more than 60 feet in height, components for heavy-duty horse scaffolds, components made with other materials, and components with other dimensions, etc.) must be designed and constructed in accordance with the capacity requirements of WAC 296-155-483(1), and loaded in accordance with WAC 296-155-483 (4)(a).

Index to Appendix A for Part J-1

1. General guidelines and tables.

2. Specific guidelines and tables.

(a) Pole scaffolds:

Single-pole wood pole scaffolds.

Independent wood pole scaffolds.

(b) Tube and coupler scaffolds.

(c) Fabricated frame scaffolds.

(d) Plasterers', decorators' and large area scaffolds.

(e) Bricklayers' square scaffolds.

(f) Horse scaffolds.

(g) Form scaffolds and carpenters' bracket scaffolds.

(h) Roof bracket scaffolds.

(i) Outrigger scaffolds (one level).

(j) Pump jack scaffolds.

(k) Ladder jack scaffolds.

(l) Window jack scaffolds.

(m) Crawling boards (chicken ladders).

(n) Step, platform and trestle ladder scaffolds.

(o) Single-point adjustable suspension scaffolds.

WAC 296-155-494 (Cont.)

(p) Two-point adjustable suspension scaffolds.

(q) (1) Stonesetters' multi-point adjustable suspension scaffolds.

(q) (2) Masons' multi-point adjustable suspension scaffolds.

(r) Catenary scaffolds.

(s) Float (ship) scaffolds.

(t) Interior hung scaffolds.

(u) Needle beam scaffolds.

(v) Multi-level suspension scaffolds.

(w) Mobile scaffolds.

(x) Repair bracket scaffolds.

(y) Stilts.

(z) Tank builders' scaffolds.

1. General Guidelines and Tables

(a) The following tables, and the tables in Part 2 -- Specific guidelines and tables, assume that all load-carrying timber members (except planks) of the scaffold are a minimum of 1,500 lb-f/in(2) (stress grade) construction grade lumber. All dimensions are nominal sizes as provided in the American Softwood Lumber Standards, dated January 1970, except that, where rough sizes are noted, only rough or undressed lumber of the size specified will satisfy minimum requirements.

(b) Solid sawn wood used as scaffold planks shall be selected for such use following the grading rules established by a recognized lumber grading association or by an independent lumber grading inspection agency. Such planks shall be identified by the grade stamp of such association or agency. The association or agency and the grading rules under which the wood is graded shall be certified by the Board of Review, American Lumber Standard Committee, as set forth in the American Softwood Lumber Standard of the U.S. Department of Commerce.

(i) Allowable spans shall be determined in compliance with the National Design Specification for Wood Construction published by the National Forest Products Association; paragraph 5 of ANSI A10.8-1988 Scaffolding-Safety Requirements published by the American National Standards Institute; or for 2 x 10 inch (nominal) or 2 x 9 inch (rough) solid sawn wood planks, as shown in the following table:

WAC 296-155-494 (Cont.)

Maximum intended norminal load (lb/ft^2)	Maximum permissible span using full thickness undressed lumber (ft)	Maximum permissible span using nominal thickness lumber (ft)
25	10	8
50	8	6
75	6	

(ii) The maximum permissible span for 1 1/4 x 9-inch or wider wood plank of full thickness with a maximum intended load of 50 lb/ft.(2) shall be 4 feet.

(c) Fabricated planks and platforms may be used in lieu of solid sawn wood planks. Maximum spans for such units shall be as recommended by the manufacturer based on the maximum intended load being calculated as follows:

Rated load capacity	Intended load
Light-duty	* 25 pounds per square foot applied uniformly over the entire span area.
Medium-duty	* 50 pounds per square foot applied uniformly over the entire span area
Heavy-duty	* 75 pounds per square foot applied uniformly over the entire span area.
One-person	* 250 pounds placed at the center of the span (total 250 pounds).
Two-person	* 250 pounds placed 18 inches to the left and right of the center of the span (total 500 pounds).
Three-person	* 250 pounds placed at the center of the span and 250 pounds placed 18 inches to the left and right of the center of the span (total 750 pounds).

Note: Platform units used to make scaffold platforms intended for light-duty use shall be capable of supporting at least 25 pounds per square foot applied uniformly over the entire unit-span area, or a 250-pound point load placed on the unit at the center of the span, whichever load produces the greater shear force.

(d) Guardrails shall be as follows:

(i) Toprails shall be equivalent in strength to 2 inch by 4 inch lumber; or

1 1/4 inch x 1/8 inch structural angle iron; or

1 inch x .070 inch wall steel tubing; or 1.990 inch x .058 inch wall aluminum tubing.

(ii) Midrails shall be equivalent in strength to 1 inch by 6 inch lumber; or

1 1/4 inch x 1 1/4 inch x 1/8 inch structural angle iron; or

1 inch x .070 inch wall steel tubing; or

WAC 296-155-494 (Cont.)

1.990 inch x .058 inch wall aluminum tubing.

(iii) Toeboards shall be equivalent in strength to 1 inch by 4 inch lumber; or

1 1/4 inch x 1 1/4 inch structural angle iron; or

1 inch x .070 inch wall steel tubing; or

1.990 inch x .058 inch wall aluminum tubing.

(iv) Posts shall be equivalent in strength to 2 inch by 4 inch lumber; or

1 1/4 inch x 1 1/4 inch x 1/8 structural angle iron; or

1 inch x .070 inch wall steel tubing; or

1.990 inch x .058 inch wall aluminum tubing.

(v) Distance between posts shall not exceed 8 feet.

(e) Overhead protection shall consist of 2 inch nominal planking laid tight, or 3/4-inch plywood.

(f) Screen installed between toeboards and midrails or toprails shall consist of No. 18 gauge U.S. Standard wire one inch mesh.

2. Specific guidelines and tables.

(a) **"Pole Scaffolds".**

Single Pole Wood Scaffolds

	Light duty up to 20 feet high	**Light duty up to 60 feet high**	**Medium duty up to 60 feet high**	**Heavy duty up to 60 feet high**
Maximum intended load (lbs/ft^2)	25	25	50	75
Poles or uprights	2 x 4 in.	4 x 4 in.	4 x 4 in.	4 x 6 in.
Maximum pole spacing (longitudinal)	6 feet	10 feet	8 feet	6 feet
Maximum pole spacing (transverse)	5 feet	5 feet	5 feet	5 feet
Runners	1 x 4 in.	1-1/4 x 9 in.	2 x 10 in.	2 x 10 in
Bearers and maximum spacing of bearers: 3 feet	2 x 4 in.	2 x 4 in.	2 x 10 in or 3 x 4 in.	2 x 10 in. or 3 x 5 in.

WAC 296-155-494 (Cont.)

	Light duty up to 20 feet high	Light duty up to 60 feet high	Medium duty up to 60 feet high	Heavy duty up to 60 feet high
5 feet	2 x 6 in. or 3 x 4 in.	2 x 6 in. or 3 x 4 in. (rough)	2 x 10 in. or 3 x 4 in.	2 x 10 in. or 3 x 5 in.
6 feet	---	---	2 x 10 in. or 3 x 4 in.	2 x 10 in. or 3 x 5 in.
8 feet	---	---	2 x 10 in. or 3 x 4 in.	2 x 10 in. or 3 x 5 in.
Planking	1-1/4 x 9 in.	2 x 10 in.	2 x 10 in.	2 x 10 in.
Maximum vertical spacing of horizontal members	7 feet	9 feet	7 feet	6 ft. 6 in.
Bracing horizontal	1 x 4 in.	1 x 4 in.	1 x 6 in. or 1/4 x 4 in.	2 x 4 in.
Bracing diagonal	1 x 4 in.	1 x 4 in.	1 x 4 in.	2 x 4 in.
Tie-ins	1 x 4 in.	1 x 4 in.	1 x 4 in.	1 x 4 in.

Note: All members except planking are used on edge. All wood bearers shall be reinforced with 3/16 x 2 inch steel strip, or the equivalent, secured to the lower edges for the entire length of the bearer.

Independent Wood Pole Scaffolds

	Light duty up to 20 feet high	Light duty up to 60 feet high	Medium duty up to 60 feet high	Heavy duty up to 60 feet high
Maximum intended load	25 lbs/ft^2	25 lbs/ft^2	50 lbs/ft^2	75lbs/ft^2
Poles or uprights	2 x 4 in.	4 x 4 in.	4 x 4 in.	4 x 4 in.
Maximum pole spacing (longitudinal)	6 feet	10 feet	8 feet	6 feet
Maximum pole spacing (transverse)	6 feet	10 feet	8 feet	8 feet
Runners	1-1/4 x 4 in.	1-1/4 x 9 in.	2 x 10 in.	2 x 10 in.
Bearers and maximum spacing of bearers: 3 feet	2 x 4 in.	2 x 4 in.	2 x 10 in (rough)	2 x 10 in.
6 feet	2 x 6 in. or 3 x 4 in.	2 x 10 in. (rough) or 3 x 8 in.	2 x 10 in.	2 x 10 in. (rough)

8 feet	2 x 6 in. or 3 x 4 in.	2 x 10 in. (rough) or 3 x 8 in.	2 x 10 in.	

WAC 296-155-494 (Cont.)

	Light duty up to 20 feet high	Light duty up to 60 feet high	Medium duty up to 60 feet high	Heavy duty up to 60 feet high
10 feet	3 x 4 in.	2 x 6 in. (rough) or 3 x 3 in.	2 x 10 in.	2 x 10 in.
Planking	1-1/4 x 9 in.	2 x 10 in.	2 x 10 in.	2 x 10 in.
Maximum vertical spacing of horizontal members	7 feet	7 feet	6 feet	6 feet
Bracing horizontal	1 x 4 in.	1 x 4 in.	1 x 6 in. or 1-1/4 x 4 in.	2 x 4 in.
Bracing diagonal	1 x 4 in.	1 x 4 in.	1 x 4 in.	2 x 4 in.
Tie-ins	1 x 4 in.	1 x 4 in.	1 x 4 in.	1 x 4 in.

Note: All members except planking are used on edge. All wood bearers shall be reinforced with 3/16 x 2 inch steel strip, or the equivalent, secured to the lower edges for the entire length of the bearer.

(b) **"Tube and coupler scaffolds."**

Minimum Size of Members

	Light duty	Medium duty	Heavy duty
Maximum intended load	25 lbs/ft^2	50 lbs/ft^2	75 lbs/ft^2
Posts, runners and braces	Nominal 2 in. (1.90 inches) OD steel tube or pipe.	Nominal 2 in. (1.90 inches) OD steel tube or pipe.	Nominal 2 in. (1.90 inches) OD steel tube or pipe.
Bearers	Nominal 2 in. (1.90 inches) OD steel tube or pipe and a maximum post spacing of 4 ft. x 10 ft.	Nominal 2 in. (1.90 inches) OD steel tube or pipe and a maximum post spacing of 4 ft. x 7 ft. or Nominal 2-1/2 in (2.375 in.) OD steel tube or pipe and a maximum post spacing of 6 ft. x 8 ft. (*)	Nominal 2-1/2 in. (2.375 in.) OD steel tube or pipe and a maximum post spacing of 6 ft. x 6 ft.
Maximum runner spacing vertically	6 ft. 6 in.	6 ft. 6 in.	6 ft. 6 in.

(*) Bearers shall be installed in the direction of the shorter dimension.

Note: Longitudinal diagonal bracing shall be installed at an angle of 45 deg. (+/- 5 deg.).

WAC 296-155-494 (Cont.)

Maximum Number of Planked Levels

Maximum number of additional planked levels				
Number of Working Levels	**Light duty**	**Medium duty**	**Heavy duty**	**Maximum height of scaffold (in feet)**
1	16	11	6	125
2	11	1	0	125
3	6	0	0	125
4	1	0	0	125

(c) **"Fabricated frame scaffolds."** Because of their prefabricated nature, no additional guidelines or tables for these scaffolds are being adopted in this Appendix.

(d) **"Plasterers', decorators', and large area scaffolds."** The guidelines for pole scaffolds or tube and coupler scaffolds (Appendix A (a) and (b)) may be applied.

(e) **"Bricklayers' square scaffolds."**

Maximum intended load: 50 lb/ft.(2)(*)

Footnote(*) The squares shall be set not more than 8 feet apart for light duty scaffolds and not more than 5 feet apart for medium duty scaffolds.

Maximum width: 5 ft.

Maximum height: 5 ft.

Gussets: 1 x 6 in.

Braces: 1 x 8 in.

Legs: 2 x 6 in.

Bearers (horizontal members): 2 x 6 in.

(f) **"Horse scaffolds."**

Maximum intended load (light duty): 25 lb/ft.(2)(**)

Footnote(**) Horses shall be spaced not more than 8 feet apart for light duty loads, and not more than 5 feet apart for medium duty loads.

Maximum intended load (medium duty): 50 lb/ft.(2)(**)

Footnote(**) Horses shall be spaced not more than 8 feet apart for light duty loads, and not more than 5 feet apart for medium duty loads.

WAC 296-155-494 (Cont.)

Horizontal members or bearers:

Light duty: 2 x 4 in.

Medium duty: 3 x 4 in.

Legs: 2 x 4 in.

Longitudinal brace between legs: 1 x 6 in.

Gusset brace at top of legs: 1 x 8 in.

Half diagonal braces: 2 x 4 in.

(g) **"Form scaffolds and carpenters' bracket scaffolds."**

(1) Brackets shall consist of a triangular-shaped frame made of wood with a cross-section not less than 2 inches by 3 inches, or of 1 1/4 inch x 1 1/4 inch x 1/8 inch structural angle iron.

(2) Bolts used to attach brackets to structures shall not be less than 5/8 inches in diameter.

(3) Maximum bracket spacing shall be 8 feet on centers.

(4) No more than two employees shall occupy any given 8 feet of a bracket or form scaffold at any one time. Tools and materials shall not exceed 75 pounds in addition to the occupancy.

(5) Wooden figure-four scaffolds:

Maximum intended load: 25 lb/ft.(2)

Uprights: 2 x 4 in. or 2 x 6 in.

Bearers (two): 1 x 6 in.

Braces: 1 x 6 in.

Maximum length of bearers (unsupported): 3 ft. 6 in.

(i) Outrigger bearers shall consist of two pieces of 1 x 6 inch lumber nailed on opposite sides of the vertical support.

(ii) Bearers for wood figure-four brackets shall project not more than 3 feet 6 inches from the outside of the form support, and shall be braced and secured to prevent tipping or turning. The knee or angle brace shall intersect the bearer at least 3 feet from the form at an angle of approximately 45 degrees, and the lower end shall be nailed to a vertical support.

(6) Metal bracket scaffolds:

Maximum intended load: 25 lb/ft.(2)

Uprights: 2 x 4 inch

WAC 296-155-494 (Cont.)

Bearers: As designed.

Braces: As designed.

(7) Wood bracket scaffolds:

Maximum intended load: 25 lb/ft.(2)

Uprights: 2 x 4 in. or 2 x 6 in.

Bearers: 2 x 6 in.

Maximum scaffold width: 3 ft 6 in.

Braces: 1 x 6 in.

(h) **"Roof bracket scaffolds."** No specific guidelines or tables are given.

(i) **"Outrigger scaffolds (single level)."** No specific guidelines or tables are given.

(j) **"Pump jack scaffolds."** Wood poles shall not exceed 30 feet in height. Maximum intended load -- 500 lbs between poles; applied at the center of the span. Not more than two employees shall be on a pump jack scaffold at one time between any two supports. When 2 x 4's are spliced together to make a 4 x 4 inch wood pole, they shall be spliced with "10 penny" common nails no more than 12 inches center to center, staggered uniformly from the opposite outside edges.

(k) **"Ladder jack scaffolds."** Maximum intended load -- 25 lb/ft(2). However, not more than two employees shall occupy any platform at any one time. Maximum span between supports shall be 8 feet.

(l) **"Window jack scaffolds."** Not more than one employee shall occupy a window jack scaffold at any one time.

(m) **"Crawling boards (chicken ladders)."** Crawling boards shall be not less than 10 inches wide and 1 inch thick, with cleats having a minimum 1 x 1 1/2 inch cross-sectional area. The cleats shall be equal in length to the width of the board and spaced at equal intervals not to exceed 24 inches.

(n) **"Step, platform, and trestle ladder scaffolds."** No additional guidelines or tables are given.

(o) **"Single-point adjustable suspension scaffolds."** Maximum intended load -- 250 lbs. Wood seats for boatswains' chairs shall be not less than 1 inch thick if made of nonlaminated wood, or 5/8 inches thick if made of marine quality plywood.

(p) **"Two-point adjustable suspension scaffolds."**

WAC 296-155-494 (Cont.)

(1) In addition to direct connections to buildings (except window cleaners' anchors) acceptable ways to prevent scaffold sway include angulated roping and static lines. Angulated roping is a system of platform suspension in which the upper wire rope sheaves or suspension points are closer to the plane of the building face than the corresponding attachment points on the platform, thus causing the platform to press against the face of the building. Static lines are separate ropes secured at their top and bottom ends closer to the plane of the building face than the outermost edge of the platform. By drawing the static line taut, the platform is drawn against the face of the building.

(2) On suspension scaffolds designed for a working load of 500 pounds, no more than two employees shall be permitted on the scaffold at one time. On suspension scaffolds with a working load of 750 pounds, no more than three employees shall be permitted on the scaffold at one time.

(3) Ladder-type platforms. The side stringer shall be of clear straight-grained spruce. The rungs shall be of straight-grained oak, ash, or hickory, at least 1 1/8 inches in diameter, with 7/8 inch tenons mortised into the side stringers at least 7/8 inch. The stringers shall be tied together with tie rods not less than 1/4 inch in diameter, passing through the stringers and riveted up tight against washers on both ends. The flooring strips shall be spaced not more than 5/8 inch apart, except at the side rails where the space may be 1 inch. Ladder-type platforms shall be constructed in accordance with the following table:

Schedule for Ladder-Type Platforms

Length of Platform Side stringers, minimum cross section (finished sizes):	12 feet	14 and 16 feet	18 and 20 feet
At ends	1-3/4 x 2-3/4 in.	1-3/4 x 2-3/4 in.	1-3/4 x 3 in
At middle	1-3/4 x 3-3/4 in.	1-3/4 x 3-3/4 in.	1-3/4 x 4 in.
Reinforcing strip (mimimum)	A 1/8 x 7/8 inch steel reinforcing strip shall be attached to the side or underside, full length.		
Rungs	Rungs shall be 1-1/8 inch minimum diameter with at least 7/8 inch in diameter tenons, and the maximum spacing shall be 12 inches to center		
Tie-rods: Number (minimum)	3	4	4
Diameter (minimum)	1/4 inch	1/4 inch	1/4 inch
Flooring, minimum finished size	1/2 x 2-3/4 in.	1/2 x 2-3/4 in.	1/2 x 2-3/4 in.

Schedule for Ladder-Type Platforms

Length of Platform Side stringers, minimum cross section (finished sizes):	22 and 24 feet	28 and 30 feet

WAC 296-155-494 (Cont.)

At ends	1-3/4 x 3 in.	1-3/4 x 3-1/2 in.
At middle	1-3/4 x 4-1/4 in.	1-3/4 x 5 in
Reinforcing strip (minimum)	A 1/8 x 7/8 inch steel reinforcing strip shall be attached to the side or underside, full length.	
Rungs	Rungs shall be 1-1/8 inch minimum diameter with at least 7/8 inch in diameter tenons, and the maximum spacing shall be 12 inches to center.	
Tie-rods: number (minimum)	5	6
Diameter (minimum)	1/4 in	1/4 in.
Flooring, minimum finished size	1/2 x 2-3/4 in.	1/2 x 2-3/4 in.

(4) Plank-Type Platforms. Plank-type platforms shall be composed of not less than nominal 2 x 8 inch unspliced planks, connected together on the underside with cleats at intervals not exceeding 4 feet, starting 6 inches from each end. A bar or other effective means shall be securely fastened to the platform at each end to prevent the platform from slipping off the hanger. The span between hangers for plank-type platforms shall not exceed 10 feet.

(5) Beam-Type Platforms. Beam platforms shall have side stringers of lumber not less than 2 x 6 inches set on edge. The span between hangers shall not exceed 12 feet when beam platforms are used. The flooring shall be supported on 2 x 6 inch cross beams, laid flat and set into the upper edge of the stringers with a snug fit, at intervals of not more than 4 feet, securely nailed to the cross beams. Floor-boards shall not be spaced more than 1/2 inch apart.

(q) (1) **"Multi-point adjustable suspension scaffolds and stonesetters' multi-point adjustable suspension scaffolds."** No specific guidelines or tables are given for these scaffolds.

(q) (2) **"Masons' multi-point adjustable suspension scaffolds."** Maximum intended load -- 50 lb/ft(2). Each outrigger beam shall be at least a standard 7 inch, 15.3 pound steel I-beam, at least 15 feet long. Such beams shall not project more than 6 feet 6 inches beyond the bearing point. Where the overhang exceeds 6 feet 6 inches, outrigger beams shall be composed of stronger beams or multiple beams.

(r) **"Catenary scaffolds."**

(1) Maximum intended load -- 500 lbs.

(2) Not more than two employees shall be permitted on the scaffold at one time.

(3) Maximum capacity of come-along shall be 2,000 lbs.

(4) Vertical pickups shall be spaced not more than 50 feet apart.

WAC 296-155-494 (Cont.)

(5) Ropes shall be equivalent in strength to at least 1/2 inch (1.3 cm) diameter improved plow steel wire rope.

(s) **"Float (ship) scaffolds."**

(1) Maximum intended load -- 750 lbs.

(2) Platforms shall be made of 3/4 inch plywood, equivalent in rating to American Plywood Association Grade B-B, Group I, Exterior.

(3) Bearers shall be made from 2 x 4 inch, or 1 x 10 inch rough lumber. They shall be free of knots and other flaws.

(4) Ropes shall be equivalent in strength to at least 1 inch (2.5 cm) diameter first grade manila rope.

(t) **"Interior hung scaffolds."**

Bearers (use on edge): 2 x 10 in.

Maximum intended load: Maximum span

25 lb/ft.(2): 10 ft.

50 lb/ft.(2): 10 ft.

75 lb/ft.(2): 7 ft.

(u) **"Needle beam scaffolds."**

Maximum intended load: 25 lb/ft.(2)

Beams: 4 x 6 in.

Maximum platform span: 8 ft.

Maximum beam span: 10 ft.

(1) Ropes shall be attached to the needle beams by a scaffold hitch or an eye splice. The loose end of the rope shall be tied by a bowline knot or by a round turn and a half hitch.

(2) Ropes shall be equivalent in strength to at least 1 inch (2.5 cm) diameter first grade manila rope.

(v) **"Multi-level suspension scaffolds."** No additional guidelines or tables are being given for these scaffolds.

(w) **"Mobile Scaffolds."** Stability test as described in the ANSI A92 series documents, as appropriate for the type of scaffold, can be used to establish stability for the purpose of WAC 296-155-484 (23)(f)(ii).

(x) **"Repair bracket scaffolds."** No additional guidelines or tables are being given for these scaffolds.

WAC 296-155-494 (Cont.)

(y) **"Stilts."** No specific guidelines or tables are given.

(z) **"Tank builder's scaffold."**

(1) The maximum distance between brackets to which scaffolding and guardrail supports are attached shall be no more than 10 feet 6 inches.

(2) Not more than three employees shall occupy a 10 feet 6 inch span of scaffold planking at any time.

(3) A taut wire or synthetic rope supported on the scaffold brackets shall be installed at the scaffold plank level between the innermost edge of the scaffold platform and the curved plate structure of the tank shell to serve as a safety line in lieu of an inner guardrail assembly where the space between the scaffold platform and the tank exceeds 12 inches (30.48 cm). In the event the open space on either side of the rope exceeds 12 inches (30.48 cm), a second wire or synthetic rope appropriately placed, or guardrails in accordance with WAC 296-155-483 (7)(d), shall be installed in order to reduce that open space to less than 12 inches (30.48 cm).

(4) Scaffold planks of rough full-dimensioned 2-inch (5.1 cm) x 12-inch (30.5 cm) Douglas Fir or Southern Yellow Pine of Select Structural Grade shall be used. Douglas Fir planks shall have a fiber stress of at least 1900 lb/in(2) (130,929 n/cm(2)) and a modulus of elasticity of at least 1,900,000 lb/in(2) (130,929,000 n/cm(2)), while Yellow Pine planks shall have a fiber stress of at least 2500 lb/in(2) (172,275 n/cm(2)) and a modulus of elasticity of at least 2,000,000 lb/in(2) (137,820,000 n/cm(2)).

(5) Guardrails shall be constructed of a taut wire or synthetic rope, and shall be supported by angle irons attached to brackets welded to the steel plates. These guardrails shall comply with WAC 296-155-483 (7)(d) guardrail supports shall be located at no greater than 10 feet 6 inch intervals.

[Statutory Authority: Chapter 49.17.010, .040, .050, .060 RCW. 98-05-046 Order 97-10), § 296-155-494, filed 2/13/98, effective 4/15/98.]

WAC 296-155-496 Non-Mandatory Appendix C to Part J-1, List of National Consensus Standards.

ANSI/SIA A92.2-1990 Vehicle-Mounted Elevating and Rotating Aerial Devices

ANSI/SIA A92.3-1990 Manually Propelled Elevating Aerial Platforms

ANSI/SIA A92.5-1990 Boom Supported Elevating Work Platforms

ANSI/SIA A92.6-1990 Self-Propelled Elevating Work Platforms

ANSI/SIA A92.7-1990 Airline Ground Support Vehicle-Mounted Vertical Lift Devices

ANSI/SIA A92.8-1993 Vehicle-Mounted Bridge Inspection and Maintenance Devices

ANSI/SIA A92.9-1993 Mast-Climbing Work Platforms.

[Statutory Authority: Chapter 49.17.010, .040, .050, .060 RCW. 98-05-046 (Order 97-10), § 296-155-496, filed 2/13/98, effective 4/15/98.]

WAC 296-155-497 Non-Mandatory Appendix D to Part J-1, List of Training Topics for Scaffold Erectors and Dismantlers. This Appendix D is provided to serve as a guide to assist employers when evaluating the training needs of employees erecting or dismantling supported scaffolds.

The Agency believes that employees erecting or dismantling scaffolds should be trained in the following topics:

WAC 296-155-497 (Cont.)

* General Overview of Scaffolding

  * regulations and standards

  * erection/dismantling planning

* PPE and proper procedures

  * fall protection

  * materials handling

  * access

  * working platforms

  * foundations

  * guys, ties and braces

*Tubular Welded Frame Scaffolds

  * specific regulations and standards

  * components

  * parts inspection

  * erection/dismantling planning

  * guys, ties and braces

  * fall protection

  * general safety

  * access and platforms

  * erection/dismantling procedures

  * rolling scaffold assembly

  * putlogs

* Tube and Clamp Scaffolds

  * specific regulations and standards

  * components

  * parts inspection

WAC 296-155-497 (Cont.)

* erection/dismantling planning

* guys, ties and braces

* fall protection

* general safety

* access and platforms

* erection/dismantling procedures

* buttresses, cantilevers, & bridges

* System Scaffolds

* specific regulations and standards

* components

* parts inspection

* erection/dismantling planning

* guys, ties and braces

* fall protection

* general safety

* access and platforms

* erection/dismantling procedures

* buttresses, cantilevers, & bridges

Scaffold erectors and dismantlers should all receive the general overview, and, in addition, specific training for the type of supported scaffold being erected or dismantled.
[Statutory Authority: Chapter 49.17.010, .040, .050, .060 RCW. 98-05-046 Order 97-05), § 296-155-497, filed 2/13/98, effective 4/15/98.]

WAC 296-155-498 Non-Mandatory Appendix E to Part J-1, Drawings and Illustrations. This Appendix provides drawings of particular types of scaffolds and scaffold components, and graphic illustrations of bracing patterns and tie spacing patterns.

This Appendix is intended to provide visual guidance to assist the user in complying with the requirements of Part J-1, chapter 296-155 WAC.
[Statutory Authority: Chapter 49.17.010, .040, .050, .060 RCW. 98-05-046 (Order 97-10), § 296-155-498, filed 2/13/98, effective 4/15/98.]

PART K
FLOOR OPENINGS, WALL OPENINGS AND STAIRWAYS

WAC 296-155-500 Definitions applicable to this part.

"Floor hole" means an opening measuring less than 12 inches but more than 1 inch in its least dimension in any floor, roof, or platform through which materials but not persons may fall, such as a belt hole, pipe opening, or slot opening.

"Floor opening" means an opening measuring 12 inches or more in its least dimension in any floor, roof, or platform, through which persons may fall.

"Handrail" means a rail used to provide employees with a handhold for support.

"Low pitched roof" means a roof having a slope less than or equal to four in twelve.

"Mechanical equipment" means all motor or human propelled wheeled equipment except for wheelbarrows, mopcarts, robotic thermoplastic welders and robotic crimpers.

"Nose, **nosing"** means that portion of a tread projecting beyond the face of the riser immediately below.

"Platform" means a walking/working surface for persons, elevated above the surrounding floor or ground, such as a balcony or platform for the operation of machinery and equipment.

"Riser height" means the vertical distance from the top of a tread to the top of the next higher tread or platform/landing or the distance from the top of a platform/landing to the top of the next higher tread or platform/landing.

"Roof" means the exterior surface on the top of a building. This does not include floors which, because a building has not been completely built, temporarily become the top surface of a building.

"Roofing work" means the hoisting, storage, application, and removal of roofing materials and equipment, including related insulation, sheet metal, and vapor barrier work, but not including the construction of the roof deck.

"Runway" means a passageway for persons, elevated above the surrounding floor or ground level, such as a footwalk along shafting or a walkway between buildings.

"Safety monitoring system" means a safety system in which a competent person monitors the safety of all employees in a roofing crew, and warns them when it appears to the monitor that they are unaware of the hazard or are acting in an unsafe manner. The competent person must be on the same roof and within visual distance of the employees, and must be close enough to verbally communicate with the employees.

"Stair platform" means an extended step or landing breaking a continuous run of stairs.

"Stairrail system" means a vertical barrier erected along the unprotected sides and edges of a stairway to prevent employees from falling to lower levels. The top surface of a stairrail system may also be a "handrail."

"Stairs, stairways" means a series of steps leading from one level or floor to another, or leading to platforms, pits, boiler rooms, crossovers, or around machinery, tanks, and other equipment that are used more or less continuously or routinely by employees or only occasionally by specific individuals. For the purpose of this part, a series of steps and landings having three or more rises constitutes stairs or stairway.

WAC 296-155-500 (Cont.)

"Standard railing" means a vertical barrier erected along exposed edges of a floor opening, wall opening, ramp, platform, or runway to prevent falls of persons.

"Standard strength and construction" means any construction of railings, covers, or other guards that meets the requirements of this part.

"Toeboard" means a vertical barrier at floor level erected along exposed edges of a floor opening, wall opening, platform, runway, or ramp to prevent falls of materials.

"Tread depth" means the horizontal distance from front to back of tread (excluding nosing, if any).

"Unprotected side or edge" means any side or edge of a roof perimeter where there is no wall three feet (.9 meters) or more in height.

"Wall opening" means an opening at least 30 inches high and 18 inches wide, in any wall or partition, through which persons may fall, such as an opening for a window, a yard arm doorway or chute opening.

"Work area" means that portion of a roof where roofing work is being performed.
[Statutory Authority: Chapter 49.17 RCW. 96-24-051, (Order 96-05), § 296-155-500, filed 11/27/96, effective 02/01/97. 95-10-016, § 296-155-500, filed 4/25/95, effective 10/1/95; 91-24-017 (Order 91-07), § 296-155-500, filed 11/22/91, effective 12/24/91; 91-03-044 (Order 90-18), § 296-155-500, filed 1/10/91, effective 2/12/91. Statutory Authority: RCW 49.17.040 and 49.17.050. 86-03-074 (Order 86-14), § 296-155-500, filed 1/21/86. Statutory Authority: RCW 49.17.040, 49.17.050 and 49.17.240. 81-13-053 (Order 81-9), § 296-155-500, filed 6/17/81; Order 74-26, § 296-155-500, filed 5/7/74, effective 6/6/74.]

WAC 296-155-505 Guardrails, handrails and covers.

(1) General provisions. This part applies to temporary or emergency conditions where there is danger of employees or materials falling through floor, roof, or wall openings, or from stairways, runways, ramps, open sided floors, open sides of structures, bridges, or other open sided walking or working surfaces.

(2) The employer shall determine if the walking/working surfaces on which its employees are to work have the strength and structural integrity to support employees safely. Employees shall be allowed to work on those surfaces only when the surfaces have the requisite strength and structural integrity.

(3) When guardrails or covers required by this section must be temporarily removed to perform a specific task, the area shall be constantly attended by a monitor to warn others of the hazard or shall be protected by a movable barrier.

(4) Guarding of floor openings and floor holes.

(a) Floor openings shall be guarded by a standard railing and toe boards or cover, as specified in subsections (4)(g) and (7) of this section. In general, the railing shall be provided on all exposed sides, except at entrances to stairways. All vehicle service pits shall have a cover or removable type standard guardrail. When not in use, pits shall be covered or guarded. Where vehicle service pits are to be used again immediately, and the service person is within a 50 foot distance of the unguarded pit and also within line of sight of the unguarded pit, the cover or guardrail need not be replaced between uses. Where vehicle service pits are used frequently, the perimeters of the pits shall be delineated by high visibility, luminescent, skid resistant paint. Such painted delineation shall be kept clean and free of extraneous materials.

(b) Ladderway floor openings or platforms shall be guarded by standard railings with standard toe boards on all exposed sides, except at entrance to opening, with the passage through the railing either provided with a swinging gate or so offset that a person cannot walk directly into the opening.

WAC 296-155-505 (Cont.)

(c) Hatchways and chute floor openings shall be guarded by one of the following:

(i) Hinged covers of standard strength and construction and a standard railing with only one exposed side. When the opening is not in use, the cover shall be closed or the exposed side shall be guarded at both top and intermediate positions by removable standard railings;

(ii) A removable standard railing with toe board on not more than two sides of the opening and fixed standard railings with toe boards on all other exposed sides. The removable railing shall be kept in place when the opening is not in use and shall be hinged or otherwise mounted so as to be conveniently replaceable.

(d) Wherever there is danger of falling through a skylight opening, and the skylight itself is not capable of sustaining the weight of a two hundred pound person with a safety factor of four, standard guardrails shall be provided on all exposed sides or the skylight shall be covered in accordance with (g) of this subsection.

(e) Pits and trap door floor openings shall be guarded by floor opening covers of standard strength and construction. While the cover is not in place, the pit or trap openings shall be protected on all exposed sides by removable standard railings.

(f) Manhole floor openings shall be guarded by standard covers which need not be hinged in place. While the cover is not in place, the manhole opening shall be protected by standard railings.

(g) All floor opening or hole covers shall be capable of supporting the maximum potential load but never less than two hundred pounds (with a safety factor of four).

(i) All covers shall be secured when installed so as to prevent accidental displacement by the wind, equipment, or employees.

(ii) All covers shall be color coded or they shall be marked with the word “hole” or “cover” to provide warning of the hazard.

(iii) If it becomes necessary to remove the cover, a monitor shall remain at the opening until the cover is replaced. The monitor shall advise persons entering the area of the hazard, shall prevent exposure to the fall hazard and shall perform no other duties.

(h) Floor holes, into which persons can accidentally walk, shall be guarded by either a standard railing with standard toe board on all exposed sides, or a floor hole cover of standard strength and construction that is secured against accidental displacement. While the cover is not in place, the floor hole shall be protected by a standard railing.

(5) Guarding of wall openings.

(a) Wall openings, from which there is a drop of more than 4 feet, and the bottom of the opening is less than 3 feet above the working surface, shall be guarded as follows:

(i) When the height and placement of the opening in relation to the working surface is such that either a standard rail or intermediate rail will effectively reduce the danger of falling, one or both shall be provided;

WAC 296-155-505 (Cont.)

(ii) The bottom of a wall opening, which is less than 4 inches above the working surface, regardless of width, shall be protected by a standard toe board or an enclosing screen either of solid construction or as specified in subsection (7)(f)(ii) of this section.

(b) An extension platform, outside a wall opening, onto which materials can be hoisted for handling shall have standard guardrails on all exposed sides or equivalent. One side of an extension platform may have removable railings in order to facilitate handling materials.

(c) When a chute is attached to an opening, the provisions of (a) of this subsection shall apply, except that a toe board is not required.

(6) Guarding of open sided surfaces.

(a) Every open sided floor, platform or surface four feet or more above adjacent floor or ground level shall be guarded by a standard railing, or the equivalent, as specified in subsection (7)(a) of this section, on all open sides, except where there is entrance to a ramp, stairway, or fixed ladder. The railing shall be provided with a standard toe board wherever, beneath the open sides, persons can pass, or there is moving machinery, or there is equipment with which falling materials could create a hazard.

(b) Runways shall be guarded by a standard railing, or the equivalent, as specified in subsection (7) of this section, on all open sides, 4 feet or more above the floor or ground level. Wherever tools, machine parts, or materials are likely to be used on the runway, a toe board shall also be provided on each exposed side.

(c) Runways used exclusively for special purposes may have the railing on one side omitted where operating conditions necessitate such omission, providing the falling hazard is minimized by using a runway not less than 18 inches wide.

(d) Where employees entering upon runways become thereby exposed to machinery, electrical equipment, or other danger not a falling hazard, additional guarding shall be provided.

(e) Regardless of height, open sided floors, walkways, platforms, or runways above or adjacent to dangerous equipment, pickling or galvanizing tanks, degreasing units, and similar hazards, shall be guarded with a standard railing and toe board.

(f) Open sides of gardens, patios, recreation areas and similar areas located on roofs of buildings or structures shall be guarded by permanent standard railings or the equivalent. Where a planting area has been constructed adjacent to the open sides of the roof and the planting area is raised above the normal walking surface of the roof area, the open side of the planting area shall also be protected with standard railings or the equivalent.

(7) Standard specifications.

(a) A standard railing shall consist of top rail, intermediate rail, toe board, and posts, and shall have a vertical height of 42 inches (1.1m) plus or minus 3 inches (8cm)(39-45) inches from upper surface of top rail to floor, platform, runway, or ramp level. When conditions warrant, the height of the top edge may exceed the 45-inch height, provided the guardrail system meets all other criteria of this subsection. The intermediate rail shall be halfway between the top rail and the floor, platform, runway, or ramp. The ends of the rails shall not overhang the terminal posts except where such overhang does not constitute a projection hazard.

WAC 296-155-505 (Cont.)

Note: When employers are using stilts, the top edge height of the top rail, or equivalent member, shall be increased an amount equal to the height of the stilts.

(b) Minimum requirements for standard railings under various types of construction are specified in the following items:

(i) For wood railings, the posts shall be of at least 2 inch by 4 inch stock spaced not to exceed 8 feet; the top rail shall be of at least 2 inch by 4 inch stock and each length of lumber shall be smooth surfaced throughout the length of the railing. The intermediate rail shall be of at least 1 inch by 6 inch stock.

(ii) For pipe railings, posts and top and intermediate railings shall be at least 1 1/2 inches nominal OD diameter with posts spaced not more than 8 feet on centers.

(iii) For structural steel railings, posts and top and intermediate rails shall be of 2 inch by 2 inch by 3/8 inch angles or other metal shapes of equivalent bending strength, with posts spaced not more than 8 feet on centers.

(iv) For wire rope railings, the top and intermediate railings shall be at least 1/2 inch fibre core rope, or the equivalent to meet strength factor and deflection of (b)(v) of this subsection. Posts shall be spaced not more than 8 feet on centers. The rope shall be stretched taut, so as to present a minimum deflection.

(v) The anchoring of posts and framing of members for railings of all types shall be of such construction that the completed structure shall be capable of withstanding a load of at least 200 pounds applied in any direction at any point on the top rail, with a minimum of deflection.

(vi) Railings receiving heavy stresses from employees trucking or handling materials shall be provided additional strength by the use of heavier stock, closer spacing of posts, bracing, or by other means.

(vii) Other types, sizes, and arrangements of railing construction are acceptable, provided they meet the following conditions:

(A) A smooth surfaced top rail at a height above floor, platform, runway, or ramp level of between 39 inches and 45 inches;

(B) When the 200-pound (890N) test load specified in subsection (6)(b)(v) of this section is applied in a downward direction, the top edge of the guardrail shall not deflect to a height less than 39 inches (1.0m) above the walking/working level. Guardrail system components selected and constructed in accordance with this part will be deemed to meet this requirement.

(C) Protection between top rail and floor, platform, runway, ramp, or stair treads, equivalent at least to that afforded by a standard intermediate rail;

(D) Elimination of overhang of rail ends unless such overhang does not constitute a hazard.

(c) (i) A standard toe board shall be 4 inches minimum in vertical height from its top edge to the level of the floor, platform, runway, or ramp. It shall be securely fastened in place and have not more than 1/4 inch clearance above floor level. It may be made of any substantial material, either solid, or with openings not over 1 inch in greatest dimension.

WAC 296-155-505 (Cont.)

(ii) Where material is piled to such height that a standard toe board does not provide protection, paneling, or screening from floor to intermediate rail or to top rail shall be provided.

(d) Floor opening covers shall be of any material that meets the following strength requirements:

(i) Conduits, trenches, and manhole covers and their supports, when located in roadways, and vehicular aisles shall be designed to carry a truck rear axle load of at least 2 times the maximum intended load;

(ii) All floor opening covers shall be capable of supporting the maximum potential load but never less than two hundred pounds (with a safety factor of four).

(A) All covers shall be secured when installed so as to prevent accidental displacement by the wind, equipment, or employees.

(B) All covers shall be color coded or they shall be marked with the word “hole” or “cover” to provide warning of the hazard..

(C) If it becomes necessary to remove the cover, a monitor shall remain at the opening until the cover is replaced. The monitor shall advise persons entering the area of the hazard, shall prevent exposure to the fall hazard and shall perform no other duties.

(e) Skylight openings that create a falling hazard shall be guarded with a standard railing, or covered in accordance with (d)(ii) of this subsection.

(f) Wall opening protection shall meet the following requirements:

(i) Barriers shall be of such construction and mounting that, when in place at the opening, the barrier is capable of withstanding a load of at least 200 pounds applied in any direction (except upward), with a minimum of deflection at any point on the top rail or corresponding member.

(ii) Screens shall be of such construction and mounting that they are capable of withstanding a load of at least 200 pounds applied horizontally at any point on the near side of the screen. They may be of solid construction of grill work with openings not more than 8 inches long, or of slat work with openings not more than 4 inches wide with length unrestricted.

[Statutory Authority: RCW 49.17.010, .040, .050. 00-14-058 (Order 99-43), § 296-155-505, filed 07/03/2000, effective 10/01/00. Statutory Authority: Chapter 49.17 RCW. 96-24-051, (Order 96-05), § 296-155-505, filed 11/27/96, effective 02/01/97. 95-10-016, § 296-155-505, filed 4/25/95, effective 10/1/95; 94-15-096 (Order 94-07), § 296-155-505, filed 7/20/94, effective 9/20/94; 91-24-017 (Order 91-07), § 296-155-505, filed 11/22/91, effective 12/24/91; 91-03-044 (Order 90-18), § 296-155-505, filed 1/10/91, effective 2/12/91; 90-03-029 (Order 89-20), § 296-155-505, filed 1/11/90, effective 2/26/90. Statutory Authority: RCW 49.17.040 and 49.17.050. 86-03-074 (Order 86-14), § 296-155-505, filed 1/21/86. Statutory Authority: RCW 49.17.040, 49.17.050 and 49.17.240. 81-13-053 (Order 81-9), § 296-155-505, filed 6/17/81; Order 76-29, § 296-155-505, filed 9/30/76; Order 74-26, § 296-155-505, filed 5/7/74, effective 6/6/74.]

WAC 296-155-50503 Roofing brackets.

(1) Roofing brackets shall be constructed to fit the pitch of the roof.

(2) Securing: Brackets shall be secured in place by nailing in addition to the pointed metal projections. When it is impractical to nail brackets, rope supports shall be used. When rope supports are used, they shall consist of first grade manila of at least 3/4 inch diameter, or equivalent.

WAC 296-155-50503 (Cont.)

(3) Crawling boards or chicken ladders.

(a) Crawling boards shall be not less than ten inches wide and one inch thick, having cleats 1 x 1 1/2 inches.

(i) The cleats shall be equal in length to the width of the board and spaced at equal intervals not to exceed twenty-four inches.

(ii) Nails shall be driven through and clinched on the underside.

(iii) The crawling board shall extend from the ridge pole to the eaves when used in connection with roof construction, repair, or maintenance.

(b) A firmly fastened lifeline of at least 3/4 inch diameter rope, or equivalent, shall be strung beside each crawling board for a handhold.

(c) Crawling boards shall be secured to the roof by means of adequate ridge hooks or other effective means.

[Statutory Authority: Chapter 49.17 RCW. 96-24-051, (Order 96-05), § 296-155-50503, filed 11/27/96, effective 02/01/97. 95-10-016, § 296-155-50503, filed 4/25/95, effective 10/1/95; 91-03-044 (Order 90-18), § 296-155-50503, filed 1/10/91, effective 2/12/91. Statutory Authority: RCW 49.17.040 and 49.17.050. 86-03-074 (Order 86-14), § 296-155-50503, filed 1/21/86.]

WAC 296-155-50505 Reserved.

[Statutory Authority: Chapter 49.17 RCW. 94-15-096 (Order 94-07), § 296-155-50505, filed 7/20/94, effective 9/20/94; 91-24-017 (Order 91-07), § 296-155-50505, filed 11/22/91, effective 12/24/91. Statutory Authority: RCW 49.17.040 and 49.17.050. 86-03-074 (Order 86-14), § 296-155-50505, filed 1/21/86.]

WAC 296-155-510 Reserved.

[Statutory Authority: Chapter 49.17 RCW. 91-24-017 (Order 91-07), § 296-155-510, filed 11/22/91, effective 12/24/91; 89-11-035 (Order 89-03), § 296-155-510, filed 5/15/89, effective 6/30/89. Statutory Authority: RCW 49.17.040 and 49.17.050. 86-03-074 (Order 86-14), § 296-155-510, filed 1/21/86; Order 74-26, § 296-155-510, filed 5/7/74, effective 6/6/74.]

WAC 296-155-515 Ramps, runways, and inclined walkways.

(1) Width. Ramps, runways and inclined walkways shall be eighteen inches or more wide.

(2) Standard railings. Ramps, runways and inclined walkways shall be provided with standard railings when located four feet or more above ground or floor level.

(3) Ramp specifications. Ramps, runways and walkways shall not be inclined more than twenty degrees from horizontal and when inclined shall be cleated or otherwise treated to prevent a slipping hazard on the walking surface.

[Statutory Authority: Chapter 49.17 RCW. 96-24-051, (Order 96-05), § 296-155-515, filed 11/27/96, effective 02/01/97. 95-10-016, § 296-155-515, filed 4/25/95, effective 10/1/95. Statutory Authority: RCW 49.17.040 and 49.17.050. 86-03-074 (Order 86-14), § 296-155-515, filed 1/21/86.]

PART L
CRANES, DERRICKS, HOISTS, ELEVATORS, AND CONVEYORS

WAC 296-155-525 Cranes and derricks.

(1) Definitions applicable to this part:

Accessory - a secondary part or assembly of parts which contributes to the overall function and usefulness of a machine.

Administrative or regulatory authority - a governmental agency, or the employer in the absence of governmental jurisdiction.

Angle indicator (boom) - an accessory which measures the angle of the boom to the horizontal.

Appointed - assigned specific responsibilities by the employer or the employer's representative.

Authorized person - means a person approved or assigned by the employer to perform a specific type of duty or duties or be at a specific location or locations at the workplace.

Auxiliary hoist - a secondary hoist rope system used either in conjunction with, or independently of, the main hoist system.

Axis of rotation - the vertical axis around which the crane superstructure rotates.

Axle - the shaft or spindle with which or about which a wheel rotates. On wheel-mounted cranes it refers to a type of axle assembly including housings, gearing, differential, bearings, and mounting appurtenances.

Axle (bogie) - two or more axles mounted in tandem in a frame so as to divide the load between the axles and permit vertical oscillation of the wheels.

Ballast - weight used to supplement the weight of the machine in providing stability for lifting working loads (the term **ballast** is normally associated with locomotive cranes).

Base, anchor bolt - a crane base that is bolted to a footing.

Base, expendable - for static-mounting cranes, a style of bottom mast section or member that is cast into a concrete footing block; all or part of this component is lost to future installations.

Base, fixed - a crane base that does not travel. It may be expendable, knee braced, or anchor bolted.

Base (mounting) - the traveling base on which the rotating superstructure of a locomotive or crawler crane is mounted.

Base, tower crane - the lowermost supporting component of the crane.

Base, travel - a crane base that is a ballasted platform mounted on trucks that ride along rails.

Boom (crane) - a member hinged at the rotating superstructure and used for supporting the existing tackle.

Boom angle - the angle above or below horizontal of the longitudinal axis of the base boom section.

Boom hoist mechanism - means for supporting the boom and controlling the boom angle.

WAC 296-155-525 (Cont.)

Boom point - the outer extremity of the crane boom, containing the hoist sheave assembly.

Boom point sheave assembly - an assembly of sheaves and pin built as an integral part of the boom point.

Boom stop - a device used to limit the angle of the boom at the highest recommended position.

Brake - a device used for retarding or stopping motion.

Brace, tower - a structural attachment placed between a crane tower and an adjacent structure to pass loads to the adjacent structure and permit the crane to be erected to greater than free standing height.

Buffer - an energy absorbing device for reducing impact when a moving crane or trolley reaches the end of its permitted travel.

Cab - a housing which covers the rotating superstructure machinery, or the operator's or driver's station.

Climbing frame - a frame used with climbing cranes to transmit operational and climbing reactions to the host building frame.

Climbing ladder - a steel member with crossbars (used in parts) suspended from a climbing frame and used as jacking support points when some cranes climb.

Clutch - a means for engagement or disengagement of power.

Commercial truck vehicle - a commercial motor vehicle designed primarily for the transportation of property in connection with business and industry.

Counterweight - weight used to supplement the weight of the machine in providing stability for lifting working loads.

Counterweight jib - a horizontal member of a crane on which the counterweights and usually the hoisting machinery are mounted.

Crane carrier - the undercarriage of a wheel-mounted crane specifically designed for transporting the rotating crane superstructure. It may or may not provide its own travel mechanism. It is distinguished from a commercial truck vehicle in that it is not designed to transport personnel, materials, or equipment other than the crane-rotating superstructure.

Cross-over points - in multiple layer spooling of rope on a drum, those points of rope contact where the rope crosses the preceding rope layer.

Designated - selected or assigned by the employer or the employer's representative as being competent to perform specific duties.

Drum - the cylindrical member around which a rope is wound for lifting and lowering the load or boom.

Dynamic (loading) - loads introduced into the machine or its components due to accelerating or decelerating forces.

Flange point - a point of contact between rope and drum flange where the rope changes layers.

Free standing height - that height of a crane which is supported by the tower (mast) alone without assistance from braces, guys, or other means.

WAC 296-155-525 (Cont.)

Gage, track - the horizontal distance between two rails measured perpendicular to the direction of travel.

Gantry (A-frame) - a structural frame, extending above the superstructure, to which the boom support ropes are reeved.

High strength (traction) bolts - high strength tensile bolts used in the assembly of crane sections. The bolts are installed in tension by torquing or other means at a level greater than that produced by in-or out-of-service loads for the purpose of reducing the likelihood of bolt fatigue failure.

Hoist mechanism - a hoist drum and rope reeving system used for lifting and lowering loads.

Jib - an extension attached to the boom point to provide added boom length for lifting specified loads. The jib may be in line with the boom or offset to various angles in the vertical plane of the boom.

Jib backstop - a device which will restrain the jib from turning over backward.

Job site - work area defined by the construction contract.

Limiting device - a mechanical device which is operated by some part of a power driven machine or equipment to control loads or motions of the machine or equipment.

Load (working) - the external load in pounds (kilograms) applied to the crane, including the weight of load-attaching equipment such as lower load block, shackles, and slings.

Load block, lower - the assembly of hook or shackle, swivel, sheaves, pins, and frame suspended by the hoisting ropes.

Load block, upper - the assembly of shackle, swivel, sheaves, pins, and frame suspended from the boom point.

Load ratings - crane ratings in pounds (kilograms) established by the manufacturer.

Mast (boom) - a frame hinged at or near the boom hinge for use in connection with supporting a boom. The head of the mast is usually supported and raised or lowered by the boom hoist ropes.

Mast (jib) - a frame hinged at or near the boom point for use in connection with supporting a jib.

Normal operating conditions.

Cab- or station-operated cranes - conditions during which a crane is performing functions within the manufacturer's operating recommendations. Under these conditions, the operator is at the operating control devices on the crane, and no other persons except those appointed are to be on the crane.

Ground- or floor-operated cranes - conditions during which a crane is performing functions within the manufacturer's operating recommendations. Under these conditions, the operator is at the operating control devices that are mounted to the crane but operated with the operator off the crane, and no other persons except those appointed are to be on the crane.

Remote-operated cranes - conditions during which a crane is performing functions within the manufacturer's operating recommendations. Under these conditions, the operator is at the operating control devices that are mounted to any part of the crane, and no other persons except those appointed are to be on the crane.

WAC 296-155-525 (Cont.)

Out-of-service - the condition of a crane when unloaded, without power and with the controls unattended and prepared to endure winds above the in-service level.

Outriggers - extendable or fixed members attached to the mounting base, which rest on supports at the outer ends used to support the crane.

Pawl (dog) - a device for positively holding a member against motion in one or more directions.

Payload - that load or loads being transported by the commercial truck chassis from place to place.

Pendant - a rope or strand of specified length with fixed end connections.

Pitch diameter - the diameter of a sheave or rope drum measured at the center line of the rope.

Power-controlled lowering - a system or device in the power train, other than the load hoist brake, which can control the lowering rate of speed of the load hoist mechanism.

Qualified person - a person who, by possession of a recognized degree or certificate of professional standing, or who, by extensive knowledge, training, and experience, has successfully demonstrated the ability to solve or resolve problems relating to the subject matter and work.

Radius (load) - the horizontal distance from a projection of the axis of rotation to the base of the crane, before loading, to the center of the vertical hoist line or tackle with load applied.

Rail clamp - a tong-like metal device mounted on a locomotive crane car, which can be connected to the track.

Reeving - a rope system in which the rope travels around drums and sheaves.

Remote control station - a location, not on the crane, from which the operator can control all the crane movements.

Repetitive pickup point - when operating on a short cycle operation, the rope being used on a single layer and being spooled repetitively over a short portion of the drum.

Rope - refers to wire rope unless otherwise specified.

Rotation resistant rope - a wire rope consisting of an inner layer of strand laid in one direction covered by a layer of strand laid in the opposite direction. This has the effect of counteracting torque by reducing the tendency of the finished rope to rotate.

Running rope - a rope which travels around sheaves or drums.

Shall - this word indicates that the rule is mandatory and must be followed.

Service, light - service that involves irregular operation with loads generally about one-half or less of the rated load; a service crane at a storage yard or building site would be an example.

Service, normal - service that involves operating occasionally at rated load but normally at less than eighty-five percent of the rated load and not more than ten lift cycles per hour except for isolated instances; a crane used for concrete placement at a building site would be an example.

WAC 296-155-525 (Cont.)

Service, heavy - service that involves operating at eighty-five percent to one hundred percent of the rated load or in excess of ten lift cycles per hour as a regular specified procedure; some cranes operating at material yards or in industrial applications may fall into this category.

Sheave - a grooved wheel or pulley used with a rope to change the direction and point of application of a pulling force.

Should - this word indicates that the rule is a recommendation, the advisability of which depends on the facts in each situation.

Side loading - a load applied to an angle to the vertical plane of the boom.

Stabilizer - stabilizers are extendable or fixed members attached to the mounting base to increase the stability of the crane, but which may not have the capability of relieving all of the weight from wheels or tracks.

Standby crane - a crane which is not in regular service but which is used occasionally or intermittently as required.

Standing (guy) rope - a supporting rope which maintains a constant distance between the points of attachment to the two components connected by the rope.

Structural competence - the ability of the machine and its components to withstand the stresses imposed by applied loads.

Superstructure - the rotating upper frame structure of the machine and the operating machinery mounted thereon.

Swing - rotation of the superstructure for movement of loads in a horizontal direction about the axis of rotation.

Swing mechanism - the machinery involved in providing rotation of the superstructure.

Swivel - a load carrying member with thrust bearings to permit rotation under load in a plane perpendicular to the direction of the load.

Swiveling - the rotation of the load attachment portion (hook or shackle) of a load block (lower) or hook assembly about its axis of suspension in relation to the load line(s).

Tackle - an assembly of ropes and sheaves arranged for lifting, lowering, or pulling.

Telescoping boom - consists of a base boom from which one or more boom sections are telescoped for additional length.

Telescoping (tower crane) - a process whereby the height of a traveling or fixed base crane is increased typically by raising the inner tower and then adding sections at the top of the outer tower; there are also cranes that are telescoped by adding to the inner tower from below.

Tower (mast) - a vertical structural frame consisting of columns and bracing capable of supporting an upperstructure with its working and dynamic loads and transmitting them to the supporting surface or structure.

Traction (high strength) bolts - see high strength bolts.

Transit - the moving or transporting of a crane from one job site to another.

Travel - the function of the machine moving under its own power from one location to another on a job site.

WAC 296-155-525 (Cont.)

Trolley - the device that travels along the load jib and contains the upper load block.

Two-blocking - the condition in which the lower load block or hook assembly comes in contact with the upper load block or boom point sheave assembly.

Weathervaning - wind induced rotation of a crane upperstructure, when out-of-service, to expose minimal surface area to the wind.

Wedge - a tapered wood or steel device used to provide stability to cranes during use as a climber. When the wedges are tightened against the four main legs of the tower, they convert overturning moments into horizontal forces to be resisted by the floor framing or slab.

Wheel base - the distance between centers of front and rear axles. For a multiple axle assembly the axle center for wheel base measurement is taken as the midpoint of the assembly.

Whipline (runner or auxiliary) - a secondary rope system usually of lighter load capacity than that provided by the main rope system.

Winch head - a power driven spool for handling of loads by means of friction between fiber or wire rope and the spool.

(2) General requirements.

(a) The employer shall comply with the manufacturer's specifications and limitations applicable to the operation of any and all cranes and derricks. Where manufacturer's specifications are not available the limitations assigned to the equipment shall be based on the determinations of a qualified engineer, competent in this field and such determinations will be appropriately documented and recorded. Attachments used with cranes shall not exceed the capacity, rating, or scope recommended by the manufacturer.

(b) Rated load capacities, and recommended operating speeds, and special hazard warnings, or instruction, shall be conspicuously posted on all equipment. Instructions or warnings shall be visible to the operator while at the control station.

(c) Hand signals to crane and derrick operators shall be those prescribed by the applicable ANSI standard for the type of crane in use. An illustration of the signals shall be posted at the job site.

(d) The employer shall designate a competent person who shall inspect all machinery and equipment prior to each use, and periodically during use to make sure it is in safe operating condition. Any deficiencies shall be repaired, or defective parts replaced, before continued use.

(e) A thorough, annual inspection of the hoisting machinery shall be made by a competent person, or by a government or private agency recognized by the department. The employer shall maintain a permanent record of the dates and results of all inspections for each hoisting machine and piece of equipment.

(f) A tag line or guide rope shall be used on all loads that swing freely. Guide ropes or tag lines shall be held by experienced persons.

(g) Care shall be taken to guard against injury to workers, or damage to scaffolds or buildings, from swinging loads.

WAC 296-155-525 (Cont.)

(h) The operator shall avoid carrying loads over people.

(i) When work is stopped or when the derrick is not in operation, the boom shall be lowered to a horizontal position or tied in place to prevent it whipping with the wind or other external force.

(j) Only authorized personnel shall make sling hitches on loads.

(k) Workers shall not be allowed to ride on loads handled by derricks.

(l) Operators shall observe signals only from duly authorized persons. Under no circumstances shall a load be moved until the signal is received from authorized personnel.

(m) Belts, gears, shafts, pulleys, sprockets, spindles, drums, fly wheels, chains, or other reciprocating, rotating, or other moving parts or equipment shall be guarded if such parts are exposed to contact by employees, or otherwise create a hazard. Guarding shall meet the requirements of chapter 296-24 WAC.

(n) A minimum distance of thirty inches clearance shall be maintained between the swing radius of the greatest extension of the crane superstructure or counterweights and a stationary object, including the crane itself, while the crane is in operation. When this clearance cannot be maintained, suitable barricades or safeguards shall be used to isolate the pinch point hazard area.

(o) All exhaust pipes shall be guarded or insulated where contact by employees, in the performance of normal duties, is possible.

(3) Additional requirements.

(a) Whenever internal combustion engine powered equipment exhausts in enclosed spaces, tests shall be made and recorded to see that employees are not exposed to unsafe concentrations of toxic gases or oxygen deficient atmospheres. (See chapter 296-62 WAC, the general occupational health standards and other applicable standards.)

(b) All cab glazing shall be safety glazing material. Windows shall be provided in the front and on both sides of the cab or operator's compartment with visibility forward and to either side. Visibility forward shall include a vertical range adequate to cover the boom point at all times. The front window may have a section which can be readily removed or held open, if desired. If the section is of the type held in the open position, it shall be secured to prevent inadvertent closure. A windshield wiper should be provided on the front window.

(c) (i) Where necessary for rigging or service requirements, a ladder or steps shall be provided to give access to a cab roof.

(ii) On cranes, guardrails, handholds and steps shall be provided for easy access to the car and cab in accordance with chapter 296-155 WAC, Part C-1 and Part J.

(iii) Platforms and walkways shall have anti-skid surfaces.

(d) Fuel tank filler pipe shall be located in such a position, or protected in such manner, as to not allow spill or overflow to run onto the engine, exhaust, or electrical equipment of any machine being fueled.

WAC 296-155-525 (Cont.)

(i) An accessible fire extinguisher of 5BC rating, or higher, shall be available at all operator stations or cabs of equipment.

Note: For additional requirements relating to portable fire extinguishers see WAC 296-800-300.

(ii) All fuels shall be transported, stored, and handled to meet the rules of Part D of this chapter. When fuel is transported by vehicles on public highways, department of transportation rules concerning such vehicular transportation are considered applicable.

(e) Except where electrical distribution and transmission lines have been deenergized and visibly grounded at point of work or where insulating barriers, not a part of or an attachment to the equipment or machinery, have been erected to prevent physical contact with the lines, equipment or machines shall be operated proximate to power lines only in accordance with the following:

(i) For lines rated 50 kV. or below, minimum clearance between the lines and any part of the crane or load shall be 10 feet;

(ii) For lines rated over 50 kV., minimum clearance between the lines and any part of the crane or load shall be 10 feet plus 0.4 inch for each 1 kV. over 50 kV., or twice the length of the line insulator, but never less than 10 feet;

(iii) In transit with no load and boom lowered, the equipment clearance shall be a minimum of 4 feet for voltages less than 50 kV., and 10 feet for voltages over 50 kV. up to and including 345 kV., and 16 feet for voltages up to and including 750 kV;

(iv) A person shall be designated to observe clearance of the equipment and give timely warning to insure that the required separation is maintained for all operations where it is difficult for the operator to maintain the desired clearance by visual means;

(v) Cage-type boom guards, insulating links, or proximity warning devices may be used on cranes, but the use of such devices shall not alter the requirements of any other regulation of this part even if such device is required by law or regulation;

(vi) Any overhead wire shall be considered to be an energized line unless and until the person owning such line or the electrical utility authorities indicate that it is not an energized line and it has been visibly grounded;

(vii) Prior to work near transmitter tower where an electrical charge can be induced in the equipment or materials being handled, the transmitter shall be deenergized or tests shall be made to determine if electrical charge is induced on the crane.

(f) The following precautions shall be taken when necessary to dissipate induced voltage:

(i) The equipment shall be provided with an electrical ground directly to the upper rotating structure supporting the boom; and

(ii) Ground jumper cables shall be attached to materials being handled by boom equipment when electrical charge is induced while working near energized transmitters. Crews shall be provided with nonconductive poles having large alligator clips or other similar protection to attach the ground cable to the load.

(iii) Combustible and flammable materials shall be removed from the immediate area prior to operations.

WAC 296-155-525 (Cont.)

(g) No modifications or additions which affect the capacity or safe operation of the equipment shall be made by the employer without the manufacturer's or a qualified engineer's written approval. If such modifications or changes are made, the capacity, operation, and maintenance instruction plates, tags, or decals, shall be changed accordingly. In no case shall the original safety factor of the equipment be reduced.

(h) The employer shall comply with Power Crane and Shovel Association, Mobile Hydraulic Crane Standard No. 2.

(i) Sideboom cranes mounted on wheel or crawler tractors shall meet the requirements of SAE J743a-1964.

(4) Crawler, locomotive, and truck cranes.

(a) All jibs shall have positive stops to prevent their movement of more than 5° above the straight line of the jib and boom on conventional type crane booms. The use of cable type belly slings does not constitute compliance with this standard.

(b) All crawler, truck or locomotive cranes in use shall meet the applicable requirements for design, inspection, construction, testing, maintenance and operation as prescribed in the ANSI B30.5-1989, Safety Code for Crawler, Locomotive and Truck Cranes.

(5) Tower cranes.

(a) Tower cranes shall be erected, jumped and dismantled under the immediate supervision of a competent person, designated by the employer.

(b) Tower cranes shall be erected, maintained and used in accordance with the manufacturer's specifications, recommendations and procedures. All modifications shall be approved by the manufacturer and engineered by a professional engineer. The safety factors shall not be reduced by any modifications. The crane plates and charts shall be changed to reflect any modifications made.

(c) A professional engineer shall certify that the crane foundations and underlying soil are adequate support for the tower crane with its maximum overturning movement.

(d) Tower cranes shall be positioned whereby they can swing 360° without either the counterweight or jib striking any building, structure or other object, except:

(i) If the crane can strike an object or another crane, suitable limit switches shall be installed which will prohibit contact with such objects, or;

(ii) Direct voice communications shall be established between any operator of the tower crane(s) involved and a signalperson so stationed where the boom and/or counterweight movement, and the object with which it may contact can be observed so that the operator(s) can be warned of imminent danger.

(iii) A secondary means of positive communications shall be established as a back-up for possible direct voice communication failure.

(iv) Radio communication systems without tone coded squelch are prohibited. Citizens band radios shall not be used as a means of communications for tower cranes.

WAC 296-155-525 (Cont.)

(e) Prior to installing a climbing tower crane within an existing building or new construction, a structural engineer shall certify that the building is designed to withstand the torque and floor loading created by the crane to be installed.

(f) Tower cranes erected on a new foundation shall be tested in accordance with ANSI B30.3-1990 Chapter 3-1.

(i) The test shall consist of suspending a load of not less than 110% of the rated capacity for 15 minutes. The load shall be suspended from the furthest point of the length of boom (jib) to be used. The results of this test shall be within the manufacturer's recommendations and/or specifications.

(ii) A record of each test shall be made and signed by the person responsible for conducting the test. Such records shall be maintained on the construction site for the duration of the construction work for which it was erected and subsequently made a part of the firm's permanent equipment records. Records shall be made available to authorized representatives of the department, upon request.

(g) A capacity chart shall be furnished by each crane manufacturer which shall include a full and complete range of crane load ratings at all stated operating radii for each allowable speed and each recommended counterweight load.

(i) Such chart shall be posted in the operator's cab or at the remote control stand in use. In lieu of the chart at the remote control stand, a minimum of two weight capacity signs shall be affixed to the jib or boom.

(ii) The chart shall be visible and readable to the operator while at the normal operating position.

(h) Operating controls shall be properly marked to indicate the function of the controls in each position.

(i) An operating and maintenance manual written in the English language shall be provided with each tower crane.

(j) Limit switches shall be installed and shall be kept properly adjusted. They shall be protected or isolated in a manner which will prevent unauthorized tampering. Limit switches shall provide the following functions:

(i) Safely limit the travel of the trolley to prevent it from hitting the outer end of the jib.

(ii) Limit the upward travel of the load block to prevent two-blocking.

(iii) Lower over travel limiting devices shall be provided for all load hoists where the hook area is not visible to the operator.

(iv) Limit the load being lifted in a manner whereby no more than 110% of the maximum rated load can be lifted or moved.

(k) The crane shall not be used to pull vehicles of any type, remove piling, loosen form work, pull away loads which are attached to the ground or walls, or for any operation other than the proper handling of freely suspended loads.

WAC 296-155-525 (Cont.)

(l) When the operator may be exposed to the hazard of falling objects, the tower crane cab and/or remote control station shall have adequate overhead protection.

(m) The operator shall be protected from the weather. If enclosed cabs are provided they shall provide clear visibility in all directions and glass shall be approved safety glass or the equivalent.

(n) An approved and safe means shall be provided for access to operator's cab and machinery platform.

(o) When necessary for inspection or maintenance purposes, ladders, walkways with railing or other devices shall be provided.

(p) Each tower crane shall be provided with a slewing brake capable of preventing the jib or boom from rotating in either direction and stopping the rotation of the jib or boom while loaded, when desired. Such brake shall have a holding device which, when set, will hold the jib or boom in a fixed location without additional attention of the operator. When the crane is out of operation, the jib or boom shall be pointed downwind and the slewing brake shall be released so as to permit the jib or boom to weathervane, providing the jib or boom has a clear 360 degree rotation. Where a 360 degree rotation is not provided, the jib or boom shall be pointed downwind from the prevailing wind and the slewing brake set.

(q) Each tower crane shall be provided with a braking system on the trolley capable of stopping and holding the trolley in any desired position while carrying a maximum load. This brake shall be capable of being locked in a fixed location without additional attention of the operator. An automatic brake or device shall be installed which will immediately stop and lock the trolley in position in the event of a breakage of the trolley rope.

(r) All electrical equipment shall be properly grounded and protection shall be provided against lightning.

(s) When the operator is actually operating the crane, the operator shall remain in a stationary position.

(t) All crane brakes shall automatically set in event of power failure. Swing brakes shall also function in this manner or be capable of being set manually.

(u) Climbing jack systems used for raising a tower crane shall be equipped with over-pressure relief valves, direct-reading pressure gauges, and pilot-operated hydraulic check valves installed in a manner which will prevent jack from retracting should a hydraulic line or fitting rupture or fail.

(v) During periods of high winds or weather affecting visibility, i.e., fog, etc., only loads shall be handled that are consistent with good safety practices. Good safety practices shall be mutually agreed upon by the operator and the person in charge of the construction job, with due consideration given to manufacturer's specifications and recommendations.

(w) Counterweights shall be securely fastened in place and shall not exceed the weight as recommended by the manufacturer for the length of jib being used. However, an amount of counterweight as recommended by the manufacturer shall be used.

(x) Tower cranes shall be inspected and maintained in accordance with the manufacturer's recommendations or more frequently if there is reason to suspect a possible defect or weakening of any portion of the structure or equipment.

WAC 296-155-525 (Cont.)

(y) Guy wires, wedges, braces or other supports shall be inspected at the beginning and at midpoint of each working shift to ascertain that they are functioning as intended.

(6) Additional tower crane requirements.

(a) An approved method must be instituted for transmitting signals to the operator. Standard hand signals for crane operations must be used, whenever possible; however, if conditions are such that hand signals are ineffective, radio-controlled or electric-whistle signal or two-way voice communication must be used. (See WAC 296-155-525(5)(d).)

(b) Tower cranes shall not be erected or raised when the wind velocity at the worksite exceeds 20 m.p.h. or that specified by the manufacturer.

(c) Tower crane operators shall be trained and experienced in tower crane operations; however, for gaining experience, persons may operate the tower crane if under the immediate supervision of an experienced operator.

(d) Adequate clearance shall be maintained between moving and rotating structures of the crane and fixed objects to allow the passage of employees without harm.

(e) Employees required to perform duties on the horizontal boom of hammerhead tower cranes shall be protected against falling by guardrails or by a full body harness and lanyards attached to crane or to lifelines in conformance with Part C-1 of this chapter.

(f) Buffers shall be provided at both ends of travel of the trolley.

(g) Cranes mounted on rail tracks shall be equipped with limit switches limiting the travel of the crane on the track and stops or buffers at each end of the tracks.

(h) All hammerhead tower cranes in use shall meet the applicable requirements for design, construction, installation, testing, maintenance, inspection, and operation as prescribed by the manufacturer.

(i) Access ladders inside the telescoping sections of tower cranes are exempt from those sections of the safety standards pertaining to cleat length and cleat spacing, but shall conform to manufacturer's recommendations and specifications.

(7) Overhead and gantry cranes.

(a) The rated load of the crane shall be plainly marked on each side of the crane, and if the crane has more than one hoisting unit, each hoist shall have its rated load marked on it or its load block, and this marking shall be clearly legible from the ground or floor.

(b) Bridge trucks shall be equipped with sweeps which extend below the top of the rail and project in front of the truck wheels.

(c) Except for floor-operated cranes, a gong or other effective audible warning signal shall be provided for each crane equipped with a power traveling mechanism.

(d) All overhead and gantry cranes in use shall meet the applicable requirements for design, construction, installation, testing, maintenance, inspection, and operation as prescribed in ANSI B30.2.0-1990, Safety Code for Overhead and Gantry Cranes.

WAC 296-155-525 (Cont.)

(8) Derricks. All derricks in use shall meet the applicable requirements for design, construction, installation, inspection, testing, maintenance, and operation as prescribed in American National Standard Institute B30.6-1990, Safety Code for Derricks.

(9) Floating cranes and derricks.

(a) Mobile cranes mounted on barges.

(i) When a mobile crane is mounted on a barge, the rated load of the crane shall not exceed the original capacity specified by the manufacturer.

(ii) A load rating chart, with clearly legible letters and figures, shall be provided with each crane, and securely fixed at a location easily visible to the operator.

(iii) When load ratings are reduced to stay within the limits for list of the barge with a crane mounted on it, a new load rating chart shall be provided.

(iv) Mobile cranes on barges shall be positively secured.

(b) Permanently mounted floating cranes and derricks.

(i) When cranes and derricks are permanently installed on a barge, the capacity and limitations of use shall be based on competent design criteria.

(ii) A load rating chart with clearly legible letters and figures shall be provided and securely fixed at a location easily visible to the operator.

(iii) Floating cranes and floating derricks in use shall meet the applicable requirements for design, construction, installation, testing, maintenance, and operation as prescribed by the manufacturer.

(c) Protection of employees working on barges. The employer shall comply with the applicable requirements for protection of employees as specified in WAC 296-155-630.

(10) Mobile cranes and excavation machines.

(a) In all power driven shovel operations the person in charge shall issue instructions necessary to prevent accidents, to detect and correct unsafe acts and dangerous conditions, and to enforce all safety rules and regulations.

The person in charge shall also issue instructions on the proper method of using tools and handling material.

(b) Where the ground is soft or uneven, timbering and planking shall be used to provide firm foundation and distribute the load.

(c) In case of a breakdown, the shovel shall be moved away from the foot of the slope before repairs are made.

(d) All persons shall keep away from the range of the shovel's swing and shall not be permitted to stand back of the shovel or in line with the swing of the dipper during operation or moving of shovel.

WAC 296-155-525 (Cont.)

(e) Unauthorized persons shall not be allowed on the shovel during operations, and the operator shall not converse with other persons while operating machine.

(f) The shovel dipper shall rest on the ground or on blocking during shut down periods.

(g) Shovels shall be inspected daily and all defects promptly repaired.

(h) All rubber tired mobile cranes shall be equipped with outriggers and sufficient blocking to properly stabilize crane while operating.

(i) Rubber tired mobile cranes shall be equipped with rear view mirrors.

(j) Positive boom stops shall be provided on all mobile cranes of the wheel and crawler type.

(k) Length of a crane boom and amount of counterweight shall not exceed manufacturer's rated capacity for equipment involved; except on isolated cases where permission is granted by the department.

(l) On all cranes where wedge brackets are used as terminal connections, the proper size wedge shall be used.

(m) On all mobile cranes, the hoist and boom drums shall be provided with a positive operated pawl or dog which shall be used in addition to the brake to hold the load and boom when they are suspended. Counterweight operated dogs are prohibited.

(n) Oiling and greasing shall be done under safe conditions with machine at rest, except when motion of machine is necessary.

(o) All steps, running boards, and boom ladder shall be of substantial construction and in good repair at all times.

(p) Operators shall not leave the cab while master clutch is engaged.

(q) Fire extinguishers shall be readily accessible and within reach of operator at all times.

(r) All shovel and crane cabs shall be kept clean and free of excess oil and grease on floor and machinery. Oily and greasy rags shall be disposed of immediately after use and not allowed to accumulate.

(s) Tools shall not be left on the cab floor. Spare cans of oil or fuel, and spare parts, shall not be stored in cabs, except in approved racks provided for that purpose.

(t) Mats or planking shall be used in moving shovels or cranes over soft or uneven ground.

(u) Cranes or shovels setting on steep grades shall be securely blocked or secured with a tail hold.

(v) Smoking shall be prohibited while fueling or oiling machines.

(w) Gasoline powered motors shall be stopped during refueling.

(x) Handling of movable feed line (bologna) shall be accomplished with insulated hooks and lineman's rubber gloves.

WAC 296-155-525 (Cont.)

(y) Where cables cross roads they shall be elevated or placed in a trench.

(z) On all power shovels, including back-hoe types, of one-half cubic yard capacity or over, and on all dragline cranes or all-purpose cranes of the crawler or wheel type, two persons shall constitute the minimum working crew. It is mandatory that one be a qualified operator of the equipment in use. The job title of the other crew member may be oiler, rigger, signal person, or a laborer. The primary purpose of the second crew member is to signal the operator when the operator's vision is impaired or obscured and to be on-hand in case of emergency.

(i) Second-crew persons shall be properly trained in their second-person required skills.

(ii) The second crew member shall be close enough to the machine in operation to be aware of any emergency, if one arises, and to assure the machine is operated with necessary and appropriate signals to the operator.

[Statutory Authority: RCW 49.17.010, .040, .050. 02-12-098 (Order 00-20), § 296-155-525, filed 06/05/02, effective 08/01/02. Statutory Authority: Chapter 49.17 RCW. 95-17-036 (Order 95-04), § 296-155-525, filed 8/9/95, effective 9/25/95; 91-03-044 (Order 90-18), § 296-155-525, filed 1/10/91, effective 2/12/91; Order 76-29, § 296-155-525, filed 9/30/76; Order 74-26, § 296-155-525, filed 5/7/74, effective 6/6/74.]

WAC 296-155-526 Crane attached personnel platforms.

(1) Scope, application, and definitions.

(a) Scope and application. This standard applies to the design, construction, testing, use and maintenance of personnel platforms, and the hoisting of personnel platforms attached to the boom of cranes. Crane attached personnel platforms must meet the applicable requirements for design, inspection, construction, testing, maintenance, and operation as prescribed in the ASME B30.23-1998 safety code for Personnel Lifting Systems.

(b) Definitions. For the purposes of this section, the following definitions apply:

"Failure" means load refusal, breakage, or separation of components.

"Lift" (or lifting) refers to all crane functions such as hoisting, lowering, swinging, booming in and out or up and down, or moving an attached personnel platform.

"Load refusal" means the point where the ultimate strength is exceeded.

"Runway" means a firm, level surface, designed, prepared, and designated as a path of travel for the weight and configuration of the crane being used to lift and travel with the attached crane platform. An existing surface may be used as long as it meets these criteria.

(2) General requirements. The use of a crane to hoist employees on a personnel platform is prohibited, except when the erection, use, and dismantling of conventional means of reaching the worksite, such as a personnel hoist, ladder, stairway, aerial lift, elevating work platform or scaffold, would be more hazardous, or is not possible because of structural design or worksite conditions.

(3) Cranes requirements.

(a) All lifting operations must be performed in accordance with the manufacturer's requirements.

(b) Hoist lines must be removed and stowed or an anti two-block device installed.

WAC 296-155-526 (Cont.)

(c) Lifting of the personnel platform must be performed in a slow, controlled manner with no sudden movements of the crane or the platform.

(d) Load and boom hoist drum brakes, swing brakes, and locking devices, such as pawls or dogs, must be engaged when the personnel platform is occupied in a stationary working position.

(e) The crane must be uniformly level within one percent of level grade and located on firm footing. Cranes equipped with outriggers must follow manufacturer's requirements for use.

(f) The total weight of the loaded personnel platform must not exceed fifty percent of the rated capacity for the radius and configuration of the crane as required by load chart specifications.

(g) The use of machines having live booms (booms in which lowering is controlled by a brake without aid from other devices which slow the lowering speeds) is prohibited.

(4) Instruments and components.

(a) Cranes with variable angle booms must be equipped with a boom angle indicator, readily visible to the operator.

(b) Cranes with telescoping booms must be equipped with a device that at all times clearly indicates the boom's extended length to the operator. An accurate determination of the load radius, to be used during the lift, must be made before hoisting personnel.

(5) Personnel platforms - design criteria.

(a) A qualified engineer must design the personnel platform and attachment system.

(b) The attachment system must be designed to minimize tipping of the platform to no more than ten degrees from horizontal.

(c) The platform design must incorporate a motion control device that stabilizes the platform while being held in a working position.

(d) The personnel platform, excluding the guardrail system and body harness anchorages, must be capable of supporting, without failure, its own weight and at least five times the maximum intended load-based on a minimum allowance of five hundred pounds for the first person with light tools, and an additional two hundred fifty pounds for each additional person.

(e) Criteria for guardrail systems contained in chapter 296-155 WAC, Part K and body harness anchorages are contained in chapter 296-155 WAC, Part C will be followed.

(f) A plate or other permanent marking which indicates the weight of the platform and its rated load capacity or maximum intended load, must be conspicuously posted on the personnel platform.

(6) Platform specifications.

(a) Each personnel platform must be equipped with a guardrail system which meets the requirements of chapter 296-155 WAC, Part K. The personnel platform must also be enclosed at least from the toeboard to mid-rail with either solid construction or expanded metal having openings no greater than one-half inch (1.27 cm).

WAC 296-155-526 (Cont.)

(b) A grab rail must be installed inside the entire perimeter of the personnel platform.

(c) Access gates, if installed, must not swing outward during hoisting.

(d) Access gates, including sliding or folding gates, must be equipped with a restraining device to prevent accidental opening.

(e) Employees must have sufficient headroom to stand upright on the platform.

(f) All rough edges exposed to contact by employees must be surfaced or smoothed in order to prevent injury to employees from punctures or lacerations.

(g) A qualified welder familiar with the weld grades and types must perform all welding of the personnel platform and its components, with material specified in the platform design.

(7) Personnel platform loading.

(a) The personnel platform must not be loaded in excess of its rated load capacity.

(b) The number of employees on the personnel platform must not exceed the number required for the work to be performed.

(c) Personnel platforms must be used only for employees, tools, and materials necessary to do the work. Personnel platforms will not be used to hoist materials or tools without an employee on the platform (except to perform a trial lift or proof test as described in subsection (8) of this section).

(d) Materials and tools must be secured to prevent displacement.

(e) Materials and tools must be evenly distributed, within the confines of the platform, while work is being performed.

(f) Employees must keep their feet in contact with the floor of the platform at all times.

(8) Prelift meeting.

(a) A meeting attended by the crane operator, signal person(s) (if necessary for the lift), employee(s) to be lifted, and the person responsible for the task to be performed must be held to review the appropriate requirements of this section and the procedures to be followed.

(b) This meeting must be held before the trial lift at each new work location, and must be repeated for any employees newly assigned to the operation.

(9) Trial lift, inspection, and proof testing.

(a) A trial lift with an unoccupied personnel platform loaded at least to the anticipated lift weight must be made from ground level, or any other location where employees will enter the platform, to each location at which the personnel platform is to be hoisted and positioned. This trial lift must be performed immediately prior to allowing employees on the platform. The operator must determine that:

- All systems, controls, and safety devices are activated and functioning properly;
- No interferences exist; and

WAC 296-155-526 (Cont.)

- All configurations necessary to reach work locations will allow the operator to remain under the fifty percent limit of the crane's rated capacity.
- Materials and tools to be used during the actual lift must be loaded in the platform, as provided in subsection (7) of this section, for the trial lift.

Note: A single trial lift may be performed for all locations that are to be reached from a single set-up position.

(b) The trial lift must be repeated:

- Prior to hoisting employees whenever the crane is moved and set up in a new location, or returned to a previously used location.
- A meeting attended by the crane operator, signal person(s) (if necessary for the lift), employee(s) to be lifted, and the person responsible for the task to be performed must be held to review the appropriate requirements of this section and the procedures to be followed.

(c) After the trial lift:

- But prior to hoisting personnel, the platform must be hoisted a few inches and inspected to ensure that it is secure and properly balanced.
- A visual inspection of the crane, personnel platform, and the crane base support or ground must be conducted by a competent person to determine whether the testing has exposed any defect or produced any adverse effect upon any component or structure.

(d) Deficiencies found during inspection, or operation, which create a safety hazard, must be corrected before hoisting personnel.

(e) The platform must be proof tested:

- At each job site;
- Prior to hoisting employees on the personnel platform; and
- After any repair or modification.

(i) For the proof test, one hundred twenty-five percent of the platform's rated capacity will be hoisted and held in a suspended position for five minutes. The proof test load must be evenly distributed on the platform.

(ii) After each proof test a competent person must inspect the platform and rigging.

(iii) Deficiencies found during proof testing must be corrected, and another proof test conducted. Employees must not be hoisted until a deficiency free proof test has been achieved.

Note: Proof testing may be done concurrently with the required trial lift.

(10) Work practices.

(a) Employees must keep all parts of the body inside the platform during raising, lowering, and positioning, except when performing the duties of a signal person.

WAC 296-155-526 (Cont.)

(b) Before entering or exiting a personnel platform that is not landed, the platform must be secured to the structure where the work is to be performed, unless securing to the structure creates an unsafe situation.

(c) The crane operator must remain at the controls at all times when the platform is occupied.

(d) Employee lifting must be promptly discontinued upon indication of any dangerous weather conditions.

(e) Employees being lifted must remain in continuous sight of and in direct communication with the operator or signal person. Any disruption in communications will cause operations to be immediately discontinued. Signals to the operator will be in accordance with section 5-3.3, ASME B30.5 1994 and this section.

(f) In situations where direct visual contact with the operator is not possible, or the use of a signal person may be hazardous for that person, direct communication alone, such as by radio, may be used. If a secure radio frequency is not available, hard-wired voice communication will be used. When using voice commands, there will be a continuous pause between commands of one-second duration per ten feet to the desired lift height or any contact point.

(g) The following voice commands are recommended for use:

- Boom up.
- Boom down.
- Swing left.
- Swing Right.
- Extend out.
- Retract in.
- Stop.

Note: If special voice commands are required to perform the lift safely, they must be mutually agreed upon between the designated signal person and the crane operator before the lift procedure starts.

(h) Employees on a personnel platform must use a full body harness system with lanyard appropriately attached to a structural member within the personnel platform capable of supporting a fall impact for employees using the anchorage as specified in chapter 296-155 WAC, Part C.

(i) Lifts must not be made on the crane's load lines while personnel are working from an attached platform.

(11) Traveling.

(a) Lifting of employees while the crane is traveling is prohibited, except for portal, tower and locomotive cranes, or where the employer demonstrates that there is no less hazardous way to perform the work.

(b) Under any circumstances where a crane would travel while lifting personnel, the employer must implement the following procedures to safeguard employees:

(i) Crane travel must be restricted to a fixed track or runway;

WAC 296-155-526 (Cont.)

(ii) Travel must be limited to the load radius of the boom used during the lift; and

(iii) The boom must be parallel to the direction of travel.

(c) A complete trial run must be performed before employees are allowed to occupy the platform.

Note: This trial run can be performed concurrent with the trial lift required by subsection (8) of this section.

(d) If travel is done with a rubber tired-carrier, the condition and air pressure of the tires must be checked. The chart capacity for lifts on rubber must be used for application of the fifty percent reduction of rated capacity. Notwithstanding the requirements of subsection (3) of this section, outriggers may be partially retracted as necessary for travel.

(12) Communication. When using verbal signals, clarity and precision are essential for safe operation. Operators must be able to communicate with others at the worksite sufficiently to understand the signs, notices, operation instructions, and the signal code to be used.

[Statutory Authority: RCW 49-17.010, .040, .050. 00-15-028 (Order 99-39), § 296-155-526, filed 07/12/2000, effective 10/01/2000.]

WAC 296-155-527 Appendix A to WAC 296-155-525. Due to crane design configuration to maintain mobility, sheave diameters and rope, design factors are limited. Because of these limited design parameters, inspection to detect deterioration in accordance with subsections below and timely replacement are essential.

(1) Frequent inspection.

(a) All running ropes in service should be visually inspected once each working day. A visual inspection shall consist of observation of all rope which can reasonably be expected to be in use during the day's operations. These visual observations should be concerned with discovering gross damage, such as listed below, which may be an immediate hazard:

(i) Distortion of the rope such as kinking, crushing, unstranding, birdcaging, main strand displacement, or core protrusion. Loss of rope diameter in a short rope length or unevenness of outer strands should provide evidence that the rope or ropes must be replaced.

(ii) General corrosion.

(iii) Broken or cut strands.

(iv) Number, distribution and type of visible broken wires. (See subsection below for further guidance.)

(v) Core failure in rotation resistant ropes. When such damage is discovered the rope shall be either removed from service or given an inspection as detailed in periodic inspection.

(b) Care shall be taken when inspecting sections of rapid deterioration such as flange points, crossover points and repetitive pickup points on drums.

(c) Care shall be taken when inspecting certain ropes such as the following:

(i) Rotation resistant ropes, because of their higher susceptibility to damage and increased deterioration when working on equipment with limited design parameters. The internal deterioration of rotation resistant ropes may not be readily observable.

WAC 296-155-527 (Cont.)

(ii) Boom hoist ropes, because of the difficulties of inspection and the important nature of these ropes.

(2) Periodic inspection.

(a) The inspection frequency shall be determined by a qualified person and shall be based on such factors as expected rope life as determined by experience on the particular installation or similar installations, severity of environment, percentage of capacity lifts, frequency rates of operation, and exposure to shock loads. Inspections need not be at equal calendar intervals and should be more frequent as the rope approaches the end of its useful life. This inspection shall be performed at least annually.

(b) Periodic inspections shall be performed by a qualified person. This inspection shall cover the entire length of rope. Only the surface wires of the rope need be inspected. No attempt should be made to open the rope. Any deterioration resulting in an appreciable loss of original strength, such as described below, shall be noted and determination made as to whether further use of the rope would constitute a hazard:

(i) Points listed in subsection (1) of this section (Frequent inspection).

(ii) Reduction of rope diameter below nominal diameter due to loss of core support, internal or external corrosion, or wear of outside wires.

(iii) Severely corroded or broken wires at end connections.

(c) Care shall be taken when inspecting sections of rapid deterioration, such as the following:

(i) Sections in contact with saddles, equalizer sheaves, or other sheaves where rope travel is limited;

(ii) Sections of the rope at or near terminal ends where corroded or broken wires may protrude.

(3) Rope replacement.

(a) No precise rules can be given for determination of the exact time for replacement of rope, since many variable factors are involved. Continued use in this respect depends largely upon good judgment by an appointed or authorized person in evaluating remaining strength in a used rope after allowance for deterioration disclosed by inspection. Continued rope operations depends upon this remaining strength.

(b) Conditions such as the following shall be sufficient reason for questioning continued use of the rope or increasing the frequency of inspection:

(i) In running ropes, six randomly distributed broken wires in one lay or three broken wires in one strand in one lay (for special conditions relating to rotation resistant rope refer to paragraph 5-3.2.1.1(d)(1)(b) ANSI\ASME B30.5 1989).

(ii) One outer wire broken at the point of contact with the core of the rope which has worked its way out of the rope structure and protrudes or loops out from the rope structure. Additional inspection of this section is required.

WAC 296-155-527 (Cont.)

(iii) Wear of one-third the original diameter of outside individual wires.

(iv) Kinking, crushing, birdcaging, or any other damage resulting in distortion of the rope structure.

(v) Evidence of any heat damage from any cause.

(vi) Reductions from nominal diameter of more than:

(A) 1/64 in. (0.4 mm) for diameters up to and including 5/16 in. (8.0 mm);

(B) 1/32 in. (0.8 mm) for diameters 3/8 in. (9.5 mm) to and including 1/2 in. (13.0 mm);

(C) 3/64 in. (1.2 mm) for diameters 9/16 in. (14.5 mm) to and including 3/4 in. (19.0 mm);

(D) 1/16 in. (1.6mm) for diameters 7/8 in. (22.0 mm) to and including 1 1/8 in. (29.0 mm);

(E) 3/32 in. (2.4 mm) for diameters 1 1/4 in. (32.0 mm) to and including 1 1/2 in. (38.0 mm).

(vii) In standing ropes, more than two broken wires in one lay in sections beyond end connections or more than one broken wire at an end connection.

(c) Replacement rope shall have a strength rating at least as great as the original rope furnished or recommended by the crane manufacturer. Any deviation from the original size, grade, or construction shall be specified by a rope manufacturer, the crane manufacturer or a qualified person.

(d) Rope not in regular use. All rope which has been idle for a period of a month or more due to shutdown or storage of a crane on which it is installed shall be given an inspection before it is placed in service. This inspection shall be for all types of deterioration and shall be performed by an appointed or authorized person.

(e) Inspection records:

(i) Frequent inspection; no records required.

(ii) Periodic inspection: In order to establish data as a basis for judging the proper time for replacement, a dated report of rope condition at each periodic inspection shall be kept on file. This report shall cover points of deterioration. If the rope is replaced only that part need be recorded.

(f) A long-range inspection program should be established and should include records on the examination of ropes removed from service so that a relationship can be established between visual observation and actual condition of the internal structure.

(4) Rope maintenance.

(a) Rope should be stored to prevent damage or deterioration.

WAC 296-155-527 (Cont.)

(b) Unreeling or uncoiling of rope shall be done as recommended by the rope manufacturer and with care to avoid kinking or inducing a twist.

(c) Before cutting a rope, seizings shall be placed on each side of the place where the rope is to be cut to prevent unlaying of the strands. On preformed rope, one seizing on each side of the cut is required. On nonpreformed ropes of 7/8 in. (22 mm) diameter or smaller, two seizings on each side of the cut are required, and for nonpreformed rope of 1 in. (26 mm) diameter or larger, three seizings on each side of the cut are required.

(d) During installation, care should be exercised to avoid dragging of the rope in dirt or around objects which will scrape, nick, crush, or induce sharp bends in it.

(e) Rope should be maintained in a well lubricated condition. It is important that lubricant applied as part of a maintenance program shall be compatible with the original lubricant, and to this end, the rope manufacturer should be consulted; lubricant applied shall be of the type which does not hinder visual inspection. Those sections of rope which are located over sheaves or otherwise hidden during inspection and maintenance procedures require special attention when lubricating rope. The object of rope lubrication is to reduce internal friction and to prevent corrosion.

(f) When an operating rope shows greater wear at well-defined localized areas than on the remainder of the rope, rope life can be extended (in cases where a reduced rope length is adequate) by cutting off a section at the worn end, and thus shifting the wear to different areas of the rope.

(5) Operating near electric power lines:

(a) Cranes shall be operated so that no part of the crane or load enters into the danger zone.

Exceptions: *The danger zone may be entered if the electrical distribution and transmission lines have been de-energized and visibly grounded at the point of work; or the danger zone may be entered if insulating barriers (not a part of nor an attachment to the crane) have been erected to prevent physical contact with the lines.*

(i) For lines rated 50 kV. or below, minimum clearance between the lines and any part of the crane or load (including handling appendages) shall be 10 feet (3 m).

(ii) Caution shall be exercised when working near overhead lines because they can move horizontally or vertically due to wind, moving the danger zone to new positions.

(iii) While in transit with no load and boom lowered, the clearance shall be as specified in WAC 296-155-525 (3)(e).

(iv) A qualified signal person shall be assigned to observe the clearance when the crane moves to within a boom's length of the limits specified in WAC 296-155-525 (3)(e). The operator is not in the best position to judge distance between the power line and the crane or its protuberances.

(b) If cage-type boom guards, insulating links, or proximity warning devices are used on cranes, such devices shall not be a substitute for the requirements of WAC 296-155-525 (3)(e), even if such devices are required by law or regulation. In view of the complex, invisible, and lethal nature of the electrical hazard involved, and to lessen the potential of false security, limitations of such devices, if used, shall be understood by operating personnel and tested in the manner and intervals

WAC 296-155-527 (Cont.)

prescribed by the manufacturer of the device. Compliance with WAC 296-155-525 (3)(e) is the recommended practice of this regulation in determining permissible proximity of the crane and its protuberances, including load, to electrical power lines.

(c) Before the commencement of operations near electrical lines, the person responsible for the job shall notify the owners of the lines or their authorized representatives, provide them with all pertinent information, and request their cooperation.

(d) Any overhead wire shall be considered to be an energized line unless and until the person owning such line or the electrical utility authorities verify that it is not an energized line.

(e) Exceptions to this procedure, if approved by the owner of the electrical lines, may be granted by the administrative or regulatory authority if the alternate procedure provides protection and is set forth in writing.

(f) Durable signs shall be installed at the operator's station and on the outside of the crane warning that electrocution or serious bodily injury may occur unless a minimum clearance of 10 feet (3 m) is maintained between the crane or the load being handled and energized power lines. Greater clearances are required because of higher voltage as stated in WAC 296-155-525 (3)(e). These signs shall be revised when local jurisdiction requires greater clearances.

(6) Site preparation and erection.

(a) All load bearing foundations, supports, and rail tracks shall be constructed or installed to support the crane loads and to transmit them to the soil or other support medium. In addition to supporting vertical load, foundations and supports, rail supports excepted, should be designed to provide a moment resisting overturning equal to a minimum of 150% of the maximum crane overturning moment.

(b) Rails should be level and straight, unless specifically designed for curves or grades, and properly spaced for the crane trucks in accordance with the manufacturer's specifications. The track and support system should have sufficient rigidity to limit dynamic oscillations and deviations from plumb.

(c) Rails shall be securely attached to the supporting surface in a manner capable of resisting the horizontal and vertical loads specified by the manufacturer. When applicable, provisions should be made for thermal expansion and contraction.

(d) Splices in rail tracks (bolted or welded) shall have smooth joints.

(e) When required, a designated portion of the track should be arranged and constructed as an out-of-service parking area complete with means needed for supporting the crane against storm wind effects and anchoring it against unwanted movement along the track; the parking track should be in place before erection commences.

(f) Rails shall be electrically grounded when they carry cranes electrically powered from an outside source.

(g) Both ends of all tracks shall be provided with stops or buffers adjusted for simultaneous contact with both sides of the travel base.

WAC 296-155-527 (Cont.)

(h) When more than one crane will be operating on a run of track, particular consideration should be given to the number and disposition of parking areas.

(i) The hazard of earthquake effects appropriated to the site or zone should be considered.

(j) The crane manufacturer shall provide maximum resulting loads at the base of the crane, or wheel loads, for use in design of the supports.

(7) General erection requirements.

(a) When cranes are erected, the manufacturer's or a qualified person's written erection instructions and a list of the weights of each component to be erected shall be at the site.

(b) Cranes shall be erected in accordance with the crane manufacturer's or a qualified person's recommendations. Erection shall be performed under the supervision of a qualified person.

(c) Procedures shall be established before erection work commences to implement the erection instructions and to adapt them to the particular needs of the site. The need for temporary guying and bracing during erection shall be established.

(d) Before crane components are erected, they shall be visually inspected for damage. Damaged members shall not be erected until repaired in accordance with the manufacturer's or qualified person's instructions, or replaced.

(e) Slings and lifting accessories shall be selected and arranged to avoid damaging or marring crane members during erection.

(f) Wind velocity at the site at the time of erection should be considered as a limiting factor that could require suspending the erection operation.

(g) Crane towers shall be erected plumb to a tolerance that is specified by the manufacturer.

(h) Cranes required to weathervane when out-of-service shall be installed with clearance for the boom and superstructure to swing a full 360° arc without striking a fixed object or other crane.

[Statutory Authority: Chapter 49.17.RCW. 97-11-055 (Order 96-15), § 296-155-527, filed 05/20/97, effective 08/01/97. 95-17-036 (Order 95-04), § 296-155-527, filed 8/9/95, effective 9/25/95.]

WAC 296-155-528 Crane or derrick suspended personnel platforms.

(1) Scope, application, and definitions.

(a) Scope and application. This standard applies to the design, construction, testing, use and maintenance of personnel platforms, and the hoisting of personnel platforms on the load lines of cranes or derricks.

(b) Definitions. For the purposes of this section, the following definitions apply:

(i) **"Failure"** means load refusal, breakage, or separation of components.

(ii) **"Hoist"** (or hoisting) means all crane or derrick functions such as lowering, lifting, swinging, booming in and out or up and down, or suspending a personnel platform.

WAC 296-155-528 (Cont.)

(iii) **"Load refusal"** means the point where the ultimate strength is exceeded.

(iv) **"Maximum intended load"** means the total load of all employees, tools, materials, and other loads reasonably anticipated to be applied to a personnel platform or personnel platform component at any one time.

(v) **"Runway"** means a firm, level surface designed, prepared, and designated as a path of travel for the weight and configuration of the crane being used to lift and travel with the crane suspended platform. An existing surface may be used as long as it meets these criteria.

(2) General requirements. The use of a crane or derrick to hoist employees on a personnel platform is prohibited, except when the erection, use, and dismantling of conventional means of reaching the worksite, such as a personnel hoist, ladder, stairway, aerial lift, elevating work platform or scaffold, would be more hazardous, or is not possible because of structural design or worksite conditions.

(3) Cranes and derricks.

(a) Operational criteria.

(b) Hoisting of the personnel platform shall be performed in a slow, controlled, cautious manner with no sudden movements of the crane or derrick, or the platform.

(c) Load lines shall be capable of supporting, without failure, at least seven times the maximum intended load, except that where rotation resistant rope is used, the lines shall be capable of supporting without failure, at least ten times the maximum intended load. The required design factor is achieved by taking the current safety factor of 3.5 (required under WAC 296-155-525 (4)(b)) and applying the fifty percent derating of the crane capacity which is required by (f) of this subsection.

(d) Load and boom hoist drum brakes, swing brakes, and locking devices such as pawls or dogs shall be engaged when the occupied personnel platform is in a stationary working position.

(e) The crane shall be uniformly level within one percent of level grade and located on firm footing. Cranes equipped with outriggers shall have them all fully deployed following manufacturer's specifications, insofar as applicable, when hoisting employees.

(f) The total weight of the loaded personnel platform and related rigging shall not exceed fifty percent of the rated capacity for the radius and configuration of the crane or derrick.

(g) The use of machines having live booms (booms in which lowering is controlled by a brake without aid from other devices which slow the lowering speeds) is prohibited.

(h) Multiple-part line block: When a multiple-part line block is in use, a substantial strap shall be used between the crane hook and common ring, shackle, or other equivalent device, to eliminate employee exposure to the lines running through the block, and to the block itself.

(4) Instruments and components.

(a) Cranes and derricks with variable angle booms shall be equipped with a boom angle indicator, readily visible to the operator.

WAC 296-155-528 (Cont.)

(b) Cranes with telescoping booms shall be equipped with a device to indicate clearly to the operator, at all times, the boom's extended length, or an accurate determination of the load radius to be used during the lift shall be made prior to hoisting personnel.

(c) A positive acting device shall be used which prevents contact between the load block or overhaul ball and the boom tip (anti-two-blocking device), or a system shall be used which deactivates the hoisting action before damage occurs in the event of a two- blocking situation (two block damage prevention feature).

(d) The load line hoist drum shall have a system or device on the power train, other than the load hoist brake, which regulates the lowering rate of speed of the hoist mechanism (controlled load lowering). Free fall is prohibited.

(5) Rigging.

(a) Lifting bridles on box-type platforms shall consist of four legs of equal length, with one end securely shackled to each corner of the platform and the other end securely attached to a common ring, shackle, or other equivalent device to accommodate the crane hook, or a strap to the crane hook.

(b) Shackle bolts used for rigging of personnel platforms shall be secured against displacement.

(c) A substantial safety line shall pass through the eye of each leg of the bridle adjacent to the common ring, shackle, or equivalent device.

(d) Securely fastened with a minimum amount of slack to the lift line above the headache ball or to the crane hook itself.

(e) All eyes in wire rope slings shall be fabricated with thimbles.

(f) Wire rope, shackles, rings, master links, and other rigging hardware must be capable of supporting, without failure, at least five times the maximum intended load applied or transmitted to that component. Where rotation resistant wire rope is used for slings, they shall be capable of supporting without failure at least ten times the maximum intended load.

(g) Hooks on headache ball assemblies, lower load blocks, or other attachment assemblies shall be of a type that can be closed and locked, eliminating the hook throat opening. Alternatively, an alloy anchor type shackle with a bolt, nut and retaining pin may be used.

(h) Bridles and associated rigging for attaching the personnel platform to the hoist line shall be used only for the platform and the necessary employees, their tools and the materials necessary to do their work, and shall not be used for any other purpose when not hoisting personnel.

(6) Personnel platforms - design criteria.

(a) The personnel platform and suspension system shall be designed by a qualified engineer or a qualified person competent in structural design.

(b) The suspension system shall be designed to minimize tipping of the platform due to movement of employees occupying the platform.

WAC 296-155-528 (Cont.)

(c) The personnel platform itself, except the guardrail system and body harness anchorages, shall be capable of supporting, without failure, its own weight and at least five times the maximum intended load based on a minimum allowance of five hundred pounds for the first person with light tools, and an additional two hundred fifty pounds for each additional person.

(d) Criteria for guardrail systems contained in chapter 296-155 WAC, Part K and body harness anchorages are contained in chapter 296-155 WAC, Part C-1.

(e) The personnel platform shall be conspicuously posted with a plate or other permanent marking which indicates the weight of the platform and its rated load capacity or maximum intended load.

(7) Platform specifications.

(a) Each personnel platform shall be equipped with a guardrail system which meets the requirements of chapter 296-155 WAC, Part K and, shall be enclosed at least from the toeboard to mid-rail with either solid construction or expanded metal having openings no greater than one-half inch (1.27 cm).

(b) A grab rail shall be installed inside the entire perimeter of the personnel platform.

(c) Access gates, if installed, shall not swing outward during hoisting.

(d) Access gates, including sliding or folding gates, shall be equipped with a restraining device to prevent accidental opening.

(e) Headroom shall be provided which allows employees to stand upright in the platform.

(f) In addition to the use of hard hats, employees shall be protected by overhead protection on the personnel platform when employees are exposed to falling objects.

(g) All rough edges exposed to contact by employees shall be surfaced or smoothed in order to prevent injury to employees from punctures or lacerations.

(h) All welding of the personnel platform and its components shall be performed by a qualified welder familiar with the weld grades, types, and material specified in the platform design.

(i) Occupants of all personnel platforms shall wear a safety belt or harness and lanyard which meets the requirements of chapter 296-155 WAC, Part C-1.

(j) Box-type platform: The workers lanyard shall be secured to an anchorage within the platform meeting the requirements of chapter 296-155 WAC, Part C-1.

(k) Rescue platform:

(i) If the platform is used as a rescue vehicle, the injured worker shall be strapped into the stretcher or basket.

(ii) The basket shall then be secured by lanyard to an anchorage within the platform meeting the requirements of chapter 296-155 WAC, Part C-1.

(l) Boatswains chair: The workers lanyard shall be secured to the lift line above the headache ball or to the crane hook itself.

WAC 296-155-528 (Cont.)

(m) Barrel-type platform:

(i) The workers lanyard shall be secured to the lift line above the headache ball or to the crane hook itself.

(ii) A solid bar or rod shall be substantially attached in a rigid position to the bottom or side of the platform.

(iii) The bottom of the barrel-type platform shall be of a convex shape to cause the platform to lay on its side when lowered to the ground or floor.

(iv) The bar or rod shall extend a minimum of eight feet above the floor of the platform.

(v) Workers shall enter and exit from barrel-type platforms only when they are in an upright position, stable, and securely attached to the load line.

(vi) The employer shall use methods or devices which allow employees to safely enter or exit barrel-type platforms.

(8) Personnel platform loading.

(a) The personnel platform shall not be loaded in excess of its rated load capacity.

(b) The number of employees occupying the personnel platform shall not exceed the number required for the work being performed.

(c) Personnel platforms shall be used only for employees, their tools, and the materials necessary to do their work, and shall not be used to hoist only materials or tools when not hoisting personnel.

(d) Materials and tools for use during a personnel lift shall be secured to prevent displacement.

(e) Materials and tools for use during a personnel lift shall be evenly distributed within the confines of the platform while the platform is suspended.

(9) Trial lift, inspection, and proof testing.

(a) A trial lift with the unoccupied personnel platform loaded at least to the anticipated liftweight shall be made from ground level, or any other location where employees will enter the platform, to each location at which the personnel platform is to be hoisted and positioned. This trial lift shall be performed immediately prior to placing personnel on the platform. The operator shall determine that all systems, controls, and safety devices are activated and functioning properly; that no interferences exist; and that all configurations necessary to reach those work locations will allow the operator to remain under the fifty percent limit of the hoist's rated capacity. Materials and tools to be used during the actual lift can be loaded in the platform, as provided in subsection (8)(d) and (e) of this section for the trial lift. A single trial lift may be performed at one time for all locations that are to be reached from a single set-up position.

(b) The trial lift shall be repeated prior to hoisting employees whenever the crane or derrick is moved and set up in a new location or returned to a previously used location. Additionally, the trial lift shall be repeated when the lift route is changed unless the operator determines that the route change is not significant (i.e., the route change would not affect the safety of hoisted employees).

WAC 296-155-528 (Cont.)

(c) After the trial lift, and just prior to hoisting personnel, the platform shall be hoisted a few inches and inspected to ensure that it is secure and properly balanced. Employees shall not be hoisted unless the following conditions are determined to exist:

(i) Hoist ropes shall be free of kinks;

(ii) Multiple part lines shall not be twisted around each other;

(iii) The primary attachment shall be centered over the platform; and

(iv) The hoisting system shall be inspected if the load rope is slack to ensure all ropes are properly stated on drums and in sheaves.

(d) A visual inspection of the crane or derrick, rigging, personnel platform, and the crane or derrick base support or ground shall be conducted by a competent person immediately after the trial lift to determine whether the testing has exposed any defect or produced any adverse effect upon any component or structure.

(e) Any defects found during inspections which create a safety hazard shall be corrected before hoisting personnel.

(f) At each job site, prior to hoisting employees on the personnel platform, and after any repair or modification, the platform and rigging shall be proof tested to one hundred twenty-five percent of the platform's rated capacity by holding it in a suspended position for five minutes with the test load evenly distributed on the platform (this may be done concurrently with the trial lift). After proof testing, a competent person shall inspect the platform and rigging. Any deficiencies found shall be corrected and another proof test shall be conducted. Personnel hoisting shall not be conducted until the proof testing requirements are satisfied.

(10) Work practices.

(a) Employees shall keep all parts of the body inside the platform during raising, lowering, and positioning. This provision does not apply to an occupant of the platform performing the duties of a signal person.

(b) Before employees exit or enter a hoisted personnel platform that is not landed, the platform shall be secured to the structure where the work is to be performed, unless securing to the structure creates an unsafe situation.

(c) Tag lines shall be used unless their use creates an unsafe condition.

(d) The crane or derrick operator shall remain at the controls at all times when the crane engine is running and the platform is occupied.

(e) Hoisting of employees shall be promptly discontinued upon indication of any dangerous weather conditions or other impending danger.

(f) Employees being hoisted shall remain in continuous sight of and in direct communication with the operator or signal person. In those situations where direct visual contact with the operator is not possible, and the use of a signal person would create a greater hazard for that person, direct communication alone such as by radio may be used.

WAC 296-155-528 (Cont.)

(g) Hand signals to the operator shall be in accordance with WAC 296-155-525 (2)(c).

(h) Except over water, employees occupying the personnel platform shall use a full body harness system with lanyard appropriately attached to the lower load block or overhaul ball, or to a structural member within the personnel platform capable of supporting a fall impact for employees using the anchorage as specified in chapter 296-155 WAC, Part C-1. When working over water, the requirements of WAC 296-155-235 shall apply.

No lifts shall be made on another of the crane's or derrick's load lines while personnel are suspended on a platform.

(11) Traveling.

(a) Hoisting of employees while the crane is traveling is prohibited, except for portal, tower and locomotive cranes, or where the employer demonstrates that there is no less hazardous way to perform the work.

(b) Under any circumstances where a crane would travel while hoisting personnel, the employer shall implement the following procedures to safeguard employees:

(i) Crane travel shall be restricted to a fixed track or runway;

(ii) Travel shall be limited to the load radius of the boom used during the lift; and

(iii) The boom must be parallel to the direction of travel.

(c) A complete trial run shall be performed to test the route of travel before employees are allowed to occupy the platform. This trial run can be performed at the same time as the trial lift required by subsection (9)(a) of this section which tests the route of the lift.

(d) If travel is done with a rubber tired-carrier, the condition and air pressure of the tires shall be checked. The chart capacity for lifts on rubber shall be used for application of the fifty percent reduction of rated capacity. Notwithstanding subsection (3)(e) of this section, outriggers may be partially retracted as necessary for travel.

(12) Prelift meeting.

(a) A meeting attended by the crane or derrick operator, signal person(s) (if necessary for the lift), employee(s) to be lifted, and the person responsible for the task to be performed shall be held to review the appropriate requirements of this section and the procedures to be followed.

(b) This meeting shall be held prior to the trial lift at each new work location, and shall be repeated for any employees newly assigned to the operation.

[Statutory Authority: Chapter 49.17.010, .040, .050,.060 RCW. 98-05-046 (Order 97-10), § 296-155-528, filed 2/13/98, effective 4/15/98.]

WAC 296-155-530 Material hoists, personnel hoists, and elevators.

(1) General requirements.

(a) The employer shall comply with the manufacturer's specifications and limitations applicable to the operation of all hoists and elevators. Where the manufacturer's specifications are not available, the limitations assigned to the equipment shall be based on the determinations of a professional engineer competent in the field.

(b) The employer shall ensure that no person shall enter a hoistway, elevator shaft, or similar enclosure in which the hoisting apparatus or vehicle is installed and functioning unless the power source operating those systems is locked out in accordance with WAC 296-155-429.

(c) Rated load capacities, recommended operating speeds, and special hazard warning or instructions shall be posted on cars and platforms.

(d) Wire rope shall be removed from service when any of the following conditions exists:

(i) In hoisting ropes, six randomly distributed broken wires in one rope lay or three broken wires in one strand in one rope lay;

(ii) Abrasion, scrubbing, flattening, or peening, causing loss of more than one-third of the original diameter of the outside wires;

(iii) Evidence of any heat damage resulting from a torch or any damage caused by contact with electrical wires;

(iv) Reduction from nominal diameter of more than three sixty-fourths inch for diameters up to and including three-fourths inch; one-sixteenth inch for diameters seven-eighths to 1 1/8 inches; and three thirty-seconds inch for diameters 1 1/4 to 1 1/2 inches.

(e) Hoisting ropes shall be installed in accordance with the wire rope manufacturer's recommendations.

(f) The installation of live booms on hoists is prohibited.

(g) The use of endless belt-type man lifts on construction shall be prohibited.

(h) Employees shall not be permitted to ride on top of material hoists, personnel hoists or permanent elevators except for purposes of inspection, maintenance, elevator installation or dismantling work.

(2) Material hoists,

(a) (i) Operating rules shall be established and posted at the operator's station of the hoist. Such rules shall include signal system and allowable line speed for various loads. Rules and notices shall be posted on the car frame or crosshead in a conspicuous location, including the statement “No riders allowed.”

(ii) No person shall be allowed to ride on material hoists except for the purposes of inspection and maintenance.

WAC 296-155-530 (Cont.)

(b) All entrances of the hoistways shall be protected by substantial gates or bars which shall guard the full width of the landing entrance. All hoistway entrance bars and gates shall be painted with diagonal contrasting colors, such as black and yellow stripes.

(i) Bars shall be not less than 2- by 4-inch wooden bars or the equivalent, located 2 feet from the hoistway line. Bars shall be located not less than 36 inches nor more than 42 inches above the floor.

(ii) Gates or bars protecting the entrances to hoistway shall be quipped with a latching device.

(c) Overhead protective covering of two-inch planking, 3/4-inch plywood or other solid material of equivalent strength shall be provided on the top of every material hoist cage or platform to prevent objects falling on the workers loading or unloading the hoist.

(i) The protective covering on the top of the cage or platform may be made in hinged sections that may be raised when hoisting long material.

(ii) When using a cage or platform for long material, the several pieces of the material shall be securely fastened together and made fast to the cage or platform, so that no part of the load can fall or project beyond the sides of the cage or platform.

(d) The operator's station of a hoisting machine shall be provided with overhead protection equivalent to tight planking not less than 2 inches thick. The support for the overhead protection shall be of equal strength.

(e) Hoist towers may be used with or without an enclosure on all sides. However, whichever alternative is chosen, the following applicable conditions shall be met:

(i) When a hoist tower is enclosed, it shall be enclosed on all sides for its entire height with a screen enclosure of 1/2-inch mesh, No. 18 U.S. gauge wire or equivalent, except for landing access.

(ii) When a hoist tower is not enclosed, the hoist platform or car shall be totally enclosed (caged) on all sides for the full height between the floor and the overhead protective covering with 1/2-inch mesh of No. 14 U.S. gauge wire or equivalent. The hoist platform enclosure shall include the required gates for loading and unloading. A 6-foot high enclosure shall be provided on the unused sides of the hoist tower at ground level.

(f) Car arresting devices shall be installed to function in case of rope failure.

(g) All material hoist towers shall be designed by a licensed professional engineer.

(h) All material hoists shall conform to the requirements of ANSI A10.5-1969, Safety Requirements for Material Hoists.

(3) Personnel hoists.

(a) Personnel hoists shall be provided for access and egress on all multi story buildings where vertical travel exceeds sixty feet from a ground level access point.

WAC 296-155-530 (Cont.)

(b) Hoist towers outside the structure shall be enclosed for the full height on the side or sides used for entrance and exit to the structure. At the lowest landing, the enclosure on the sides not used for exit or entrance to the structure shall be enclosed to a height of at least 10 feet. Other sides of the tower adjacent to floors or scaffold platforms shall be enclosed to a height of 10 feet above the level of such floors or scaffolds.

(c) Towers inside of structures shall be enclosed on all four sides throughout the full height.

(d) Towers shall be anchored to the structure at intervals not exceeding 25 feet. In addition to tie-ins, a series of guys shall be installed. Where tie-ins are not practical the tower shall be anchored by means of guys made of wire rope at least one-half inch in diameter, securely fastened to anchorages to ensure stability.

(e) Hoistway doors or gates shall be not less than 6 feet 6 inches high and shall be provided with mechanical locks which cannot be operated from the landing side, and shall be accessible only to persons on the car.

(f) Cars shall be permanently enclosed on all sides and the top, except sides used for entrance and exit, which have car gates or doors.

(g) A door or gate shall be provided at each entrance to the car which shall protect the full width and height of the car entrance opening.

(h) Overhead protective covering of 2-inch planking, 3/4-inch plywood or other solid material of equivalent strength shall be provided on the top of every personnel hoist.

(i) Doors or gates shall be provided with electric contacts which do not allow movement of the hoist when door or gate is open.

(j) A signal device shall be installed in the elevator car and only operated by an attendant who shall give the signals for operation, when transporting workers.

(k) An electrical push button signalling device or other approved signalling system shall be provided at each floor landing connected to an annunciator in the car. The signal code shall be posted adjacent to the signal device at each and every work level and at operator's work level. All wording shall be black on a white card, in large clear letters.

(l) The elevator machine and controls shall be housed in as a protection against accidents and the weather, and the door kept locked against unauthorized entrance when operator is not in attendance.

(m) Safeties shall be capable of stopping and holding the car and rated load when traveling at governor tripping speed.

(n) Cars shall be provided with a capacity and data plate secured in a conspicuous place on the car or crosshead.

(o) Internal combustion engines shall not be permitted for direct drive.

(p) Normal and final terminal stopping devices shall be provided.

WAC 296-155-530 (Cont.)

(q) An emergency stop switch shall be provided in the car and marked "stop."

(r) Ropes:

(i) The minimum number of hoisting ropes used shall be three for traction hoists and two for drum-type hoists.

(ii) The minimum diameter of hoisting and counterweight wire ropes shall be 1/2-inch.

(iii) Safety factors:

MINIMUM FACTORS OF SAFETY FOR SUSPENSION WIRE ROPES

Rope speed in feet per minute:	Minimum factor of Safety:
50	7.60
75	7.75
100	7.95
125	8.10
150	8.25
175	8.40
200	8.60
225	8.75
250	8.90
300	9.20
350	9.50
400	9.75
450	10.00
500	10.25
550	10.45
600	10.70

(s) Following assembly and erection of hoists, and before being put in service, an inspection and test of all functions and safety devices shall be made under the supervision of a competent person. A similar inspection and test is required following major alteration of an existing installation. All hoists shall be inspected and tested at not more than 3-month intervals. Records shall be maintained and kept on file for the duration of the job.

(t) All personnel hoists used by employees shall be constructed of materials and components which meet the specifications for materials, construction, safety devices, assembly, and structural integrity as stated in the American National Standard A10.4-1963, Safety Requirements for Workmen's Hoists. The requirements of this subdivision do not apply to cantilever type personnel hoists.

(u) Wire rope shall be taken out of service when any of the following conditions exist:

(i) In running ropes, six randomly distributed broken wires in one lay or three broken wires in one strand in one lay;

WAC 296-155-530 (Cont.)

(ii) Wear of one-third the original diameter of outside individual wires. Kinking, crushing, bird caging, or any other damage resulting in distortion of the rope structure;

(iii) Evidence of any heat damage from any cause;

(iv) Reductions from nominal diameter of more than three-sixty-fourths inch for diameters to and including three-fourths inch, one sixteenth inch for diameter seven-eights inch to 1 1/8 inches inclusive, three-thirty-seconds inch for diameters 1 1/4 to 1 1/2 inches inclusive;

(v) In standing ropes, more than two broken wires in one lay in sections beyond end connections or more than one broken wire at an end connection.

(v) (i) Personnel hoists used in bridge tower construction shall be approved by a registered professional engineer and erected under the supervision of a qualified engineer competent in this field.

(ii) When a hoist tower is not enclosed, the hoist platform or car shall be totally enclosed (caged) on all sides for the full height between the floor and the overhead protective covering with 3/4-inch mesh of No. 14 U.S. gauge wire or equivalent. The hoist platform enclosure shall include the required gates for loading and unloading.

(iii) These hoists shall be inspected and maintained on a weekly basis. Whenever the hoisting equipment is exposed to winds exceeding 35 miles per hour it shall be inspected and put in operable condition before reuse.

(4) All elevators, manlifts or other lifting devices must be installed and maintained in conformity with the requirements specified in the Washington state elevator laws and regulations adopted by the elevator section of the department of labor and industries.

Note: For additional information refer to chapter 296-100 WAC, safety requirements for material hoists.
[Statutory Authority: RCW 49.17.010, .040, .050. 02-12-098 (Order 00-20), § 296-155-530, filed 06/05/02, effective 08/01/02. Statutory Authority: Chapter 49.17 RCW. 94-15-096 (Order 94-07), § 296-155-530, filed 7/20/94, effective 9/20/94; 91-03-044 (Order 90-18), § 296-155-530, filed 1/10/91, effective 2/12/91. Statutory Authority: RCW 49.17.040 and 49.17.050. 86-03-074 (Order 86-14), § 296-155-530, filed 1/21/86; Order 74-26, § 296-155-530, filed 5/7/74, effective 6/6/74.]

WAC 296-155-535 Base-mounted drum hoists.

(1) General requirements.

(a) Exposed moving parts such as gears, projecting screws, setscrews, chain, cables, chain sprockets, and reciprocating or rotating parts, which constitute a hazard, shall be guarded.

(b) All controls used during the normal operation cycle shall be located within easy reach of the operator's station.

(c) Electric motor operated hoists shall be provided with:

(i) A device to disconnect all motors from the line upon power failure and not permit any motor to be restarted until the controller handle is brought to the “off” position;

WAC 296-155-535 (Cont.)

(ii) Where applicable, an overspeed preventive device;

(iii) A means whereby remotely operated hoists stop when any control is ineffective.

(d) All base-mounted drum hoists in use shall meet the applicable requirements for design, construction, installation, testing, inspection, maintenance, and operation, as prescribed by the manufacturer.

(2) Specific requirements. (Reserved.)
[Order 74-26, § 296-155-535, filed 5/7/74, effective 6/6/74.]

WAC 296-155-540 Overhead hoists.

(1) General requirements.

(a) The safe working load of the overhead hoist, as determined by the manufacturer, shall be indicated on the hoist, and this safe working load shall not be exceeded.

(b) The supporting structure to which the hoist is attached shall have a safe working load equal to that of the hoist.

(c) The support shall be arranged so as to provide for free movement of the hoist and shall not restrict the hoist from lining itself up with the load.

(d) The hoist shall be installed only in locations that will permit the operator to stand clear of the load at all times.

(e) Air hoists shall be connected to an air supply of sufficient capacity and pressure to safely operate the hoist. All air hoses supplying air shall be positively connected to prevent their becoming disconnected during use.

(f) All overhead hoists in use shall meet the applicable requirements for construction, design, installation, testing, inspection, maintenance, and operation, as prescribed by the manufacturer.

(2) Specific requirements. (Reserved.)
[Order 74-26, § 296-155-540, filed 5/7/74, effective 6/6/74.]

WAC 296-155-545 Conveyors.

(1) All conveyors in use shall meet the applicable requirements for design, construction, inspection, testing, maintenance, and operation, as prescribed in ANSI B20.1-1976, Safety Code for Conveyors, Cableways, and Related Equipment.

(2) Starting precautions.

(a) When the entire length of a conveyor is visible from the starting switch, the operator shall visually check to make certain that all persons are in the clear before starting the conveyor.

(b) When the entire length of the conveyor is not visible from the starting switch, a positive audible or visible warning system shall be installed and operated to warn persons that the conveyor will be started.

WAC 296-155-545 (Cont.)

(c) All reasonable precautions shall be taken by the operator prior to starting a conveyor, to assure that no person is in a hazardous location where they may be injured when the conveyor is started.

(3) Riding and walking on conveyors.

(a) Riding on conveyor chains, belt, or bucket elevators shall be prohibited.

(b) Persons shall not be allowed to walk on conveyors except for emergency purposes and then only after the conveyor has been de-energized and the person can do so safely.

(c) Riding of conveyors shall only be permitted on the manlift steps and platforms with handholds attached and other safety factors as specified in chapter 296-82 WAC, Safety standards for existing belt manlifts.

(4) Stop controls.

(a) Means for stopping the motor or engine of a conveyor shall be provided at the operator's station.

(b) If the operator's station is at a remote point, similar provisions for stopping the motor or engine shall be provided at the motor or engine location.

(5) Emergency controls. Emergency stop switches shall be arranged so that the conveyor cannot be started again until the actuating stop switch has been reset to running or “on” position.

(6) Screw type conveyors. Screw or auger type conveyors shall be guarded to prevent employee contact with turning flights.

(7) Overhead conveyors.

(a) Where a conveyor passes over work areas, aisles, or thoroughfares, guards shall be provided to protect persons required to work below the conveyors.

(b) Where a conveyor crosses over an aisle or passageway, it shall be conspicuously marked by suitable signs, as required by Part E of this chapter.

(c) When the return strand of a conveyor operates within seven feet of the floor there shall be a trough provided of sufficient strength to carry the weight resulting from a broken chain. If the strands are over a passageway, a means shall be provided to catch and support the ends of the chain in the event of a break.

(8) Emergency stop.

(a) Conveyors shall be provided with an emergency stopping device (panic-type) which can be reached from the conveyor.

(b) The emergency stopping device shall be located near the material entrance and shall stop the conveyor a sufficient distance away from the hazard to prevent injury.

(c) Where the conveyor leading into such equipment is under constant control of an operator who has full view of the material entrance who is located or restrained where they cannot possibly fall onto the conveyor an emergency stopping device is not mandatory.

WAC 296-155-545 (Cont.)

(9) Conveyor lockout.

(a) Conveyors shall be locked out with a padlock at any time repair, maintenance, or clean-up work is being performed on the conveyor.

(b) Tags or push-button stops are not acceptable.

(10) Where conveyors are in excess of seven feet in height, means shall be provided to safely permit essential inspection and maintenance operations.

(11) Conveyor repair.

(a) Any part showing signs of significant wear shall be inspected carefully and replaced prior to reaching a condition where it may create a hazard.

(b) Replacement parts shall be equal to or exceed the manufacturer's specifications.

[Statutory Authority: Chapter 49.17 RCW. 94-15-096 (Order 94-07), § 296-155-545, filed 7/20/94, effective 9/20/94. Statutory Authority: RCW 49.17.040 and 49.17.050. 86-03-074 (Order 86-14), § 296-155-545, filed 1/21/86; Order 74-26, § 296-155-545, filed 5/7/74, effective 6/6/74.]

WAC 296-155-550 Aerial cableways.

(1) Cableways shall be designed to withstand the maximum required load with a safety factor of five (5) on all its parts.

(2) Safety stay lines shall be installed at anchor ends and equal in strength to the cableway.

(3) Where towers are required they shall be securely guyed or constructed to carry the maximum sustained load.

(4) Towers shall be provided with ladderways to facilitate safe access for repairs and inspections.

(5) Towers shall have sufficient elevation to provide substantial clearance for cableway and loads carried over all contemplated work.

(6) Running lines and sheaves, where accessible, shall be guarded.

(7) The carrier, carrier sheaves, bearings, bucket latch and all working parts shall be lubricated and visually inspected daily.

(8) All the wire ropes shall be kept lubricated with proper lubricant.

(9) Daily visual inspection shall be made of the button line, especially at the buttons where abrasion is caused by the carrier rebound. Rubber and steel ferrule shock absorbers shall be placed at each end of buttons.

(10) All loading, unloading and working stations shall be adequately lighted for night operation. Clearance lights shall be installed on all high points under cableway.

[Order 74-26, § 296-155-550, filed 5/7/74, effective 6/6/74.]

WAC 296-155-555 Gin poles.

(1) Gin poles shall be properly guyed according to the type used.

(2) Anchors may be of “dead men” or attached to some permanent stable structure.

(3) When the guy lines are anchored to a permanent structure, the anchors shall be distant at least one-half the height of the pole from its base, and when “dead men” are used, they shall be located a distant from the base at least one and one-half times the height of the pole.

(4) The pole shall be securely fastened at the foot to prevent kicking out during operation.

(5) Gin poles shall be of selected timber, sound and free from knots or other injurious defects.

(6) Allowable loads for spruce timbers used as gin poles. The allowable loads and the limiting lengths given are based on the U.S. Forest Products Laboratory Standard Recommendations for Spruce of Common Grade, based on pin connected ends for columns.

Actual	Length in feet	Allowable load capacity in tons
6"x6"	10	10.4
6"x6"	15	6.6
6"x6"	20	3.7
6"x6"	25 Max.	2.4
8"x8"	20	11.7
8"x8"	25	7.5
8"x8"	30	5.2
8"x8"	33 4" Max.	4.2
10"x10"	25	18.2
10"x10"	30	12.7
10"x10"	35	9.3
10"x10"	41 8" Max.	6.6
12"x12"	30	26.3
12"x12"	35	19.3
12"x12"	40	14.8
12"x12"	45	11.7
12"x12"	50 Max.	9.5

(7) When gin poles are spliced to increase their length, the splicing shall be made with heavy planking at least four feet long securely bolted to all four (4) sides of the pole. If splicing planks are spiked, they shall be securely lashed at the same points.

(8) Additional guy lines shall be attached at the point of splice.

[Order 74-26, § 296-155-555, filed 5/7/74, effective 6/6/74.]

WAC 296-155-560 Concrete bucket towers.

(1) A concrete bucket tower located inside a structure, and which is three feet or less from any scaffold or the edge of the shaftway or floor opening in which it is installed, shall be enclosed on all sides with heavy wire netting formed of number sixteen U.S. gauge one and one-half inch mesh. Wood slats placed vertically and spaced not more than one and one-half inches apart may be used instead of the netting.

WAC 296-155-560 (Cont.)

The enclosure shall extend at least eight feet above such scaffold or floor.

(2) A concrete bucket tower located outside a structure shall be enclosed to a height of eight feet at lower landing with heavy wire netting formed of number sixteen U.S. gauge wire one and one-half inch mesh or other suitable material.

(3) Openings with platforms shall be formed at each floor level, and the runway leading to the tower shall be guarded with standard railings and toeboards.

(4) If the bucket is discharged into a chute, the chute shall be substantially constructed of wood or metal and extend from the tower to the point where the concrete is to be poured, or transferred to vehicles or hoppers, and the chute shall be substantially supported.

(5) The pit shall be drained and deep enough so that any spill from the bucket will fall below the blocking on which the bucket rests while being filled.

(6) Persons shall not be allowed to work in the pit without first resting the bucket on strong timbers supported on two sides of the tower.

(7) The bucket tower shall be securely guyed at two or more elevations as may be necessary.

(8) The guide rails shall be carefully aligned and kept in good condition to prevent the bucket being caught or clogged while being hoisted.

(9) The sheaves over which the cable passes shall be firmly secured to overhead sheave beams and supporting frame work and the sheaves shall be kept lubricated.

(10) The hoisting cable shall be frequently inspected and renewed when broken wires or other defects are discovered.

(11) A platform provided with standard railings and toeboards shall be constructed at the point where the concrete is dumped into the chute. A ladder shall be fastened to one side of the tower to enable a person to reach the platform in safety.

(12) Workers shall be prohibited from riding in or on the bucket.

[Order 74-26, § 296-l55-560, filed 5/7/74, effective 6/6/74.]

WAC 296-155-565 Hoisting engines.

(1) All gearing on hoisting engines shall be enclosed. Steam piping subject to contact shall be insulated and if electrical equipment is used, it shall be grounded.

(2) Hoisting engines shall be of ample capacity and equipped with brakes capable of sustaining one hundred and fifty percent of rated load for stopping and sustaining the maximum load in any position.

(3) Hoisting engines shall be protected against the weather and falling objects by a substantial cover.

(4) All hoisting equipment shall be frequently inspected, and brakes, gears and operating levers kept in working condition.

WAC 296-155-565 (Cont.)

(5) Guards shall be provided to prevent persons coming in contact with hoisting cables.

(6) Brake drums shall be kept free of oil or grease.

(7) A positive operated pawl shall be used in addition to the brake to hold the load when it is suspended. Counter weight operated dogs are prohibited.

(8) Hoisting engines shall not be set up in the street when it can be avoided; but, if so located, they shall be completely housed.

(9) Only competent personnel shall operate material hoists.

(10) The operator shall not lift a load when a person is on the hoist, and all towers shall be posted to that effect, except as provided in other sections of this part.

(11) The operator shall be notified when any person goes up the tower ladder, or before any work is done on any part of the tower, overhead work, hoist or in the pit.

(12) The operator shall make daily inspections of all equipment before starting operations.

(13) When the hoisting engine is located close to the building operation, it shall be covered with a strong plank roof covering to protect the operator from falling objects.

(14) Exhaust steam pipes shall discharge overhead so as not to obstruct the view of the operator or scald persons.

(15) In the operation of hoists, the operator shall always give a warning sign or signal before starting.

(16) When hoisting machinery is set on an elevated platform such platform shall be of substantial construction and standard guard rails and toeboards shall be provided along all open sides of the platform.

(17) Material hoists of more than one drum capacity shall be equipped with brake controls.

(18) A safety strap shall be provided on the foot block of all hoists.

(19) When electric motors are used for hoisting equipment, they shall be operated only by qualified personnel.

(a) Installations shall be made in accordance with provisions of local and national electrical safety codes, and shall be made by experienced workers only.

(b) Inclosed switches and fuses shall always be used.

(c) Switchboards shall be screened, and a sign placed warning unauthorized persons to keep clear.

[Statutory Authority: Chapter 49.17 RCW. 94-15-096 (Order 94-07), § 296-155-565, filed 7/20/94, effective 9/20/94; Order 74-26, § 296-155-565, filed 5/7/74, effective 6/6/74]

WAC 296-155-570 Rigging-Wire rope.

(1) Whenever used in connection with work, employment, occupations or uses to which these standards are applicable, wire rope shall not be subjected to loads in excess of one-fifth the breaking load as given in the schedule of the cable manufacturer.

WAC 296-155-570 (Cont.)

(2) Any wire rope showing 10% of its wires broken in a three foot length shall not be used. When cables deteriorate through rusting, wear, undue strain or other conditions to the extent of 15% of their original strength, use of cable shall be discontinued.

(3) Wire rope shall be frequently inspected for wear and other defects which may reduce the strength below the point of safe operation.

(4) If wire rope is received in a coil it shall be rolled out, on a surface free from grit, like a hoop and straightened out before being put on the sheaves. If it is received on a reel, the reel shall be mounted on a spindle or turntable and the rope then unwound.

(5) Wire rope shall be lubricated. A lubricant recommended by a wire rope manufacturer shall be used.

(6) Wire rope shall be securely fastened to drums by zinc plugs or suitable clamps, and at least two full turns of the rope shall remain on the winding drum.

(7) Wire rope shall be wound evenly on the drum and not allowed to lap one layer on another in an irregular fashion.

(8) Care shall be taken to prevent friction of wire ropes with other objects which could cause chafing or breaking of wires.

(9) In attaching U-type cable clamps, the U shall always be placed over the short end of the cable.

(10) The clamp nuts shall be tightened up frequently during the operation to prevent slipping.

(11) Thimbles shall be used in cable eyes whenever practicable.

(12) Fair leads shall be used ahead of cable drums, whenever practicable, and the fleet angle kept as flat as possible to promote proper spooling.

(13) All running lines of hoisting equipment, located within seven (7) feet of the ground or working level shall be boxed, railed off or otherwise guarded, or the operating area restricted.

(14) Wire rope which has been welded or been subject to welding of any kind shall not be used.

(15) No open hook shall be used to hoist a bucket, cage, spreader, or skip, nor in any circumstances where the dislodgement of the hook could cause a risk of injury to workers. A safety-hook, mousing, or shackle shall be employed in such circumstances.

(16) When shackles are used, shackle pins shall be secured to prevent accidental withdrawal.

(17) Where a wedge socket connector is used as a wire rope terminal, a single wire rope clip shall be installed in accordance with WAC 296-155-330 (3)(g).

(18) The wire rope shall not be burned off with heat. This may weld the ends of the wires and strands together.

[Statutory Authority: RCW 49.17.040 and 49.17.050. 86-03-074 (Order 86-14), § 296-155-570, filed 1/21/86; Order 74-26, § 296-155-570, filed 5/7/74, effective 6/6/74.]

WAC 296-155-575 Helicopters and helicopter cranes.

(1) Helicopter regulations. Helicopter cranes shall be expected to comply with any applicable regulations of the Federal Aviation Administration.

(2) Briefing. Prior to each day's operation a briefing shall be conducted. This briefing shall set forth the plan of operation for the pilot and ground personnel.

(3) Slings and tag lines. Load shall be properly slung. Tag lines shall be of a length that will not permit their being drawn up into rotors. Pressed sleeve, swedged eyes, or equivalent means shall be used for all freely suspended loads to prevent hand splices from spinning open or cable clamps from loosening.

(4) Cargo hooks. All electrically operated cargo hooks shall have the electrical activating device so designed and installed as to prevent inadvertent operation. In addition, these cargo hooks shall be equipped with an emergency mechanical control for releasing the load. The hooks shall be tested prior to each day's operation to determine that the release functions properly, both electrically and mechanically.

(5) Personal protective equipment.

(a) Personal protective equipment for employees receiving the load shall consist of complete eye protection and hard hats secured by chinstraps.

(b) Loose-fitting clothing likely to flap in the downwash, and thus be snagged on hoist line, shall not be worn.

(6) Loose gear and objects. Every practical precaution shall be taken to provide for the protection of the employees from flying objects in the rotor downwash. All loose gear within 100 feet of the place of lifting the load, depositing the load, and all other areas susceptible to rotor downwash shall be secured or removed.

(7) Housekeeping. Good housekeeping shall be maintained in all helicopter loading and unloading areas.

(8) Operator responsibility. The helicopter operator shall be responsible for size, weight, and manner in which loads are connected to the helicopter. If, for any reason, the helicopter operator believes the lift cannot be made safely, the lift shall not be made.

(9) Hooking and unhooking loads. Employees shall not perform work under hovering craft except for that limited period of time necessary to guide, secure and unhook loads, or to hook loads. Regardless of whether the hooking or unhooking of a load takes place on the ground or a flat roof, or other location in an elevated work position in structural members, a safe means of access and egress, to include an unprogramed emergency escape route or routes, shall be provided for the employees who are hooking or unhooking loads.

(10) Static charge. Static charge on the suspended load shall be dissipated with a grounding device before ground personnel touch the suspended load, or protective rubber gloves shall be worn by all ground personnel touching the suspended load.

(11) Weight limitation. The weight of an external load shall not exceed the manufacturer's rating.

(12) Ground lines. Hoist wires or other gear, except for pulling lines or conductors that are allowed to “pay out” from a container or roll off a reel, shall not be attached to any fixed ground structure, or allowed to foul on any fixed structure.

WAC 296-155-575 (Cont.)

(13) Visibility. When visibility is reduced by dust or other conditions, ground personnel shall exercise special caution to keep clear of main and stabilizing rotors. Precautions shall also be taken by the employer to eliminate as far as practical reduced visibility.

(14) Signal systems. Signal systems between aircrew and ground personnel shall be understood and checked in advance of hoisting the load. This applies to either radio or hand signal systems. Hand signals shall be as shown in Figure L-1.

(15) Approach distance. No unauthorized person shall be allowed to approach within 50 feet of the helicopter when the rotor blades are turning.

(16) Approaching helicopter. Whenever approaching or leaving a helicopter with blades rotating, all employees shall remain in full view of the pilot and keep in a crouched position. Employees shall avoid the area from the cockpit or cabin rearward unless authorized by the helicopter operator to work there.

(17) Personnel. Sufficient ground personnel shall be provided when required for safe helicopter loading and unloading operations.

(18) Communications. There shall be constant reliable communication between the pilot, and a designated employee of the ground crew who acts as a signalperson during the period of loading and unloading. This signalperson shall be distinctly recognizable from other ground personnel.

(19) Fires. Open fires shall not be permitted in an area that could result in such fires being spread by the rotor downwash.

(20) Refueling operations.

(a) Under no circumstances shall the refueling of any type helicopter with either aviation gasoline or Jet B (turbine-kerosene) type fuel be permitted while the engines are running.

(b) No unauthorized persons shall be allowed within fifty feet of the refueling operation or fueling equipment.

(c) A minimum of one thirty-pound fire extinguisher, or a combination of same, good for Class A, B and C fires, shall be provided within one hundred feet on the upwind side of the refueling operation.

Note: For additional requirements relating to portable fire extinguishers see WAC 296-800-300.

(d) All fueling personnel shall be thoroughly trained in the refueling operation and in the use of available fire extinguishing equipment.

(e) There shall be no smoking, open flames, exposed flame heaters, flare pots or open flame lights for spark producing agents within fifty feet of the refueling area or fueling equipment. All entrances to the refueling area shall be posted with "NO SMOKING" signs.

(f) Due to the numerous causes of static electricity, it should be considered present at all times. Prior to starting refueling operations, the fueling equipment and the helicopter shall be grounded and the fueling nozzle shall be electrically bonded to the helicopter.

(i) Conductive hose shall not be used to accomplish the bonding.

WAC 296-155-575 (Cont.)

(ii) All grounding and bonding connections shall be electrically and mechanically firm, to clean unpainted metal parts.

(g) To control spills:

(i) Fuel shall be pumped either by hand or power.

(ii) Pouring or gravity flow shall not be permitted.

(iii) Selfclosing nozzles shall not be dragged on the ground.

(h) In case of a spill, the fueling operation shall be immediately stopped until such time as the person in charge determines that it is safe to resume the refueling operation.

(i) When ambient temperatures have been in the one hundred degree F range for an extended period of time, all refueling of helicopters with the engines running shall be suspended until such time as conditions become suitable to resume refueling with the engines running.

(21) Hook on persons shall wear contrasting colored hard hats, with chinstraps, and high visibility vests or outer garments to enable the helicopter operator to readily identify their locations.

(22) Riding the load or hook of a helicopter is prohibited except in the case of emergency and then only with the proper safety gear.

WAC 296-155-575 Figure L-1.

Figure L-1

HELICOPTER HAND SIGNALS

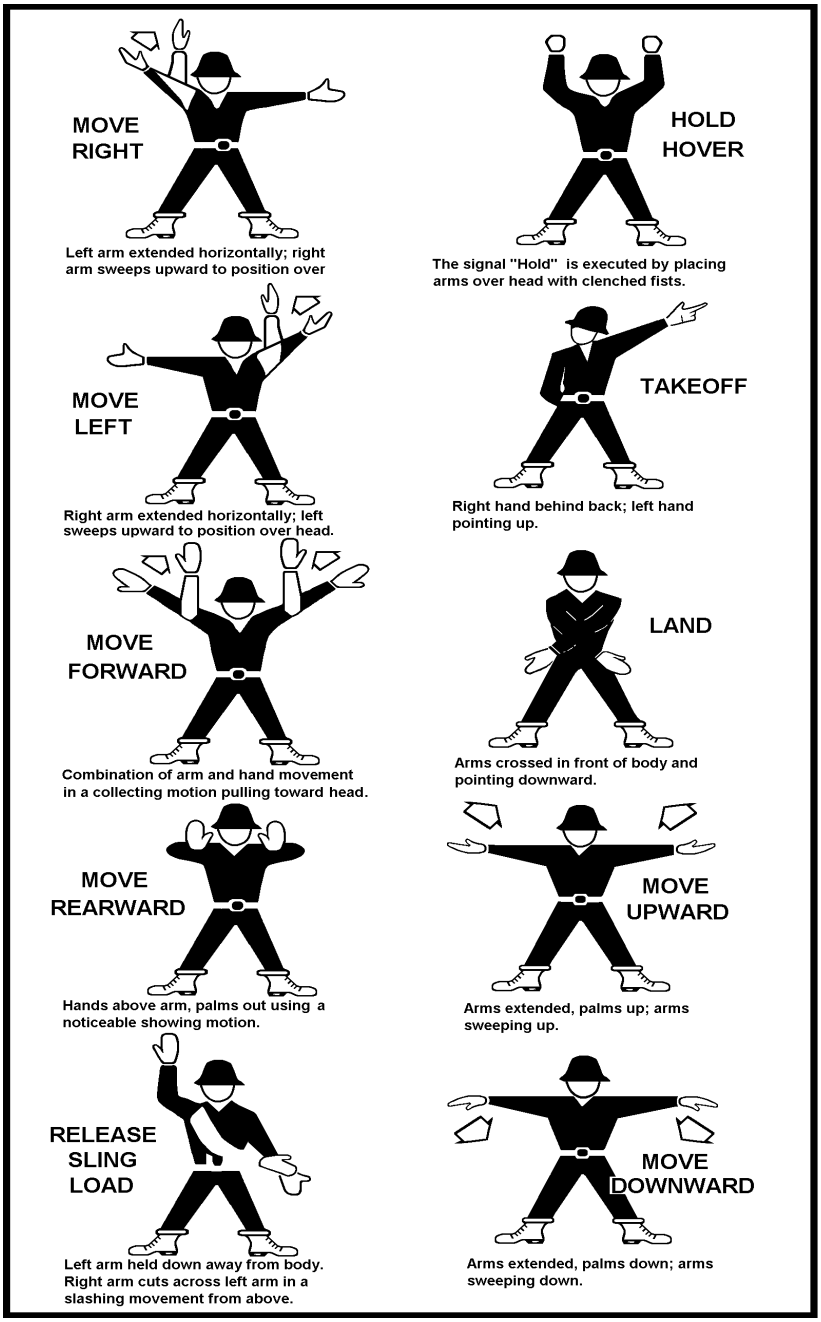

[97-11-055, (Order 96-15), § 296-155-527, filed 05/20/97, effective 08/01/97. Order 74-26, Figure L-1 (codified as WAC 296-155-576), filed 5/7/74, effective 6/6/74. Formerly WAC 296-155-575 (part).]

WAC 296-155-59901 Table 1.

TABLE 1
STANDARD 6 x 7 WIRE ROPE[1]

		Breaking Strength in Tons of 2,000 Pounds		
DIAMETER Inches	**Approximate Weight Per Foot Pounds**	**Improved Plow Steel**	**Plow Steel**	**Mild Plow Steel**
1/4	0.094	2.64	2.30	3.10
5/16	.15	4.10	3.56	3.10
3/8	.21	5.86	5.10	4.43
7/17	.29	7.93	6.90	6.00
1/2	.38	10.3	8.96	7.79
9/16	.48	13.0	11.3	9.82
5/8	.59	15.9	13.9	12.0
3/4	.84	22.7	19.8	17.2
7/8	1.15	30.7	26.7	23.2
1	1.50	39.7	34.5	30.0
1 1/8	1.90	49.8	43.3	37.7
1 1/4	2.34	61.0	53.0	46.1
1 3/8	2.84	73.1	63.6	55.3
1 1/2	3.38	86.2	75.0	65.

[1] For these ropes with steel centers, add 7 1/2% to the above strengths. For these ropes when galvanized, deduct 10% from the above strengths.

[Order 74-26, § 296-155-580 (part), Table 1 (codified as WAC 296-155-59901), filed 5/7/74, effective 6/6/74.]

WAC 296-155-59902 Table 2.

TABLE 2
STANDARD 6 x 19 WIRE ROPE[1]

		Breaking Strength in Tons of 2,000 Pounds		
DIAMETER Inches	**Approximate Weight Per Foot Pounds**	**Improved Plow Steel**	**Plow Steel**	**Mild Plow Steel**
1/4	0.10	2.74	2.39	2.07
5/16	.16	4.26	3.71	3.22
3/8	.23	6.10	5.31	4.62
7/16	.31	8.27	7.19	6.25
1/2	.40	10.7	9.35	8.13
9/16	.51	13.5	11.8	10.2
5/8	.63	16.7	14.5	12.6
3/4	.90	23.8	20.7	18.0
7/8	1.23	32.2	28.0	24.3
1	1.60	41.8	36.4	31.6
1 1/8	2.03	52.6	45.7	39.8
1 1/4	2.50	64.6	56.2	48.8
1 3/8	3.03	77.7	67.5	58.8
1 1/2	3.60	92.0	80.0	69.6
1 5/8	4.23	107.0	93.4	81.2
1 3/4	4.90	124.0	108.0	93.6
1 7/8	5.63	141.0	123.0	107.0
2	6.40	160.0	139.0	121.0
2 1/8	7.23	179.0	156.0	---
2 1/4	8.10	200.0	174.0	---
2 1/2	10.0	244.0	212.0	---
2 3/4	12.10	292.0	254.0	---

[1] For these ropes with steel centers, add 7 1/2% to the above strengths. For these ropes when galvanized, deduct 10% from the above strengths.

[Order 74-26, § 296-155-580 (part), Table 2 (codified as WAC 296-155-59902), filed 5/7/74, effective 6/6/74.]

WAC 296-155-59903 Table 3.

TABLE 3
STANDARD 8 x 19 WIRE ROPE[1]

		Breaking Strength in Tons of 2,000 Pounds	
DIAMETER Inches	**Approximate Weight per Foot Pounds**	**Improved Plow Steel**	**Mild Plow Steel**
1/4	0.09	2.35	2.04
5/16	.14	3.65	3.18
3/8	.20	5.24	4.55
7/16	.28	7.09	6.17
1/2	.36	9.23	8.02
9/16	.46	11.6	10.1
5/8	.57	14.3	12.4
3/4	.82	20.5	17.8
7/8	1.11	27.7	24.1
1	1.45	36.0	31.3
1 1/8	1.84	45.3	39.4
1 1/4	2.27	55.7	48.4
1 3/8	2.74	67.1	58.3
1 1/2	3.26	79.4	69.1

[1] For these ropes with steel centers, add 7 1/2% to the above strengths. For these ropes when galvanized, deduct 10% from the above strengths.

[Order 74-26, § 296-155-580 (part), Table 3 (codified as WAC 296-155-59903), filed 5/7/74, effective 6/6/74.]

WAC 296-155-59904 Table 4.

TABLE 4
STANDARD 6 X 37 WIRE ROPE[1]

		Breaking Strength in Tons of 2,000 Pounds	
DIAMETER Inches	**Approximate Weight per Foot Pounds**	**Improved Plow Steel**	**Mild Plow Steel**
1/4	0.10	2.59	2.25
5/16	.16	4.03	3.50
3/8	.22	5.77	5.02
7/16	.30	7.82	6.80
1/2	.39	10.2	8.85
9/16	.49	12.9	11.2
5/8	.61	15.8	13.7
3/4	.87	22.6	19.6
7/8	1.19	30.6	26.6
1	1.55	39.8	34.6
1 1/8	1.96	50.1	43.5
1 1/4	2.42	61.5	53.5
1 3/8	2.93	74.1	64.5
1 1/2	3.49	87.9	76.4
1 5/8	4.09	103.0	89.3
1 3/4	4.75	119.0	103.0
1 7/8	5.45	136.0	118.0
2	6.20	154.0	134.0
2 1/8	7.00	173.0	150.0
2 1/4	7.85	193.0	168.0
2 1/2	9.69	236.0	205.0
2 3/4	11.72	284.0	247.0
3	13.95	335.0	291.0
3 1/4	16.37	390.0	339.0
3 1/2	19.40	449.0	390.0

[1] For these ropes with steel centers, add 7 1/2% to the above strengths. For these ropes when galvanized, deduct 10% from the above strengths.

[Statutory Authority: Chapter 49.17 RCW. 91-24-017 (Order 91-07), § 296-155-59904, filed 11/22/91, effective 12/24/91; Order 74-26, § 296-155-580 (part), Table 4 (codified as WAC 296-155-59904), filed 5/7/74, effective 6/6/74.]

WAC 296-155-59905 Table 5.

TABLE 5
STANDARD 6 x 19 ELEVATOR ROPE

		Breaking Strength		
DIAMETER	**Approximate Weight Per Foot**	**Iron**	**Traction Steel**	**High Rise Traction Steel**
Inches	**Pounds**	**Pounds**	**Pounds**	**Pounds**
3/16	0.06	1,300	---	---
1/4	.10	2,200	3,600	---
5/16	.16	3,200	5,600	---
3/8	.23	5,000	8,200	---
7/16	.31	6,400	11,000	---
1/2	.40	8,400	14,500	---
9/16	.51	10,600	18,500	---
5/8	.63	12,800	23,000	---
11/16	.76	---	27,000	30,000
3/4	.90	18,200	32,000	---
13/16	1.06	---	37,000	46,000
7/8	1.23	24,800	42,000	---
15/16	1.41	---	48,000	60,000
1	1.60	32,000	54,000	---
1/16	1.81	---	61,000	---

[Order 74-26, § 296-155-580 (part), Table 5 (codified as WAC 296-155-59905), filed 5/7/74, effective 6/6/74.]

WAC 296-155-59906 Table 6.

TABLE 6
STANDARD 8 x 19 ELEVATOR ROPE

		Breaking Strength		
DIAMETER	**Approximate Weight Per Foot**	**Iron**	**Traction Steel**	**High Rise Traction Steel**
Inches	**Pounds**	**Pounds**	**Pounds**	**Pounds**
3/16	0.05	1,000	---	---
1/4	.09	1,800	3,600	---
5/16	.14	2,900	5,600	---
3/8	.20	4,200	8,200	---
7/16	.28	5,600	11,000	---
1/2	.36	7,200	14,500	---
9/16	.46	9,200	18,500	---
5/8	.57	11,200	23,000	---
11/16	.69	---	27,000	30,000
3/4	.82	16,000	32,000	---
13/16	.96	---	37,000	46,000
7/8	1.11	21,400	42,000	---
15/16	1.27	---	48,000	60,000
1	1.45	28,000	54,000	---
1 1/16	1.64	---	61,000	---

[Order 74-26, § 296-155-580 (part), Table 6 (codified as WAC 296-155-59906), filed 5/7/74, effective 6/6/74.]

WAC 296-155-59907 Table 7.

TABLE 7
STANDARD 5 x 19 MARLINE CLAD ROPE[1]

DIAMETER			Breaking Strength in Tons of 2,000 Pounds	
Before Serving Inches	After Serving Inches	Approximate Weight Per Foot Pounds	Plow Steel	Mild Plow Steel
1/4	9/16	0.21	2.17	1.89
5/16	5/8	.28	3.37	2.93
3/8	11/16	.36	4.82	4.20
7/16	3/4	.42	6.53	5.68
1/2	13/16	.51	8.50	7.39
9/16	7/8	.62	10.7	9.31
5/8	1	.81	13.2	11.4
3/4	1 1/8	1.10	18.8	16.4
7/8	1 1/4	1.70	25.5	22.1
1	1 3/8	1.32	33.7	28.7
1 1/8	1 1/2	2.12	41.6	36.2
1 1/4	1 5/8	2.58	51.1	44.4
1 3/8	1 3/4	3.14	61.4	53.4
1 1/2	1 7/8	3.69	---	---
1 5/8	2	4.29	---	---
1 3/4	2 1/8	5.00	---	---

[1] For these ropes with steel centers, add 7 1/2% to the above strengths. For these ropes when galvanized, deduct 10% from the above strengths.

[Order 74-26, § 296-155-580 (part), Table 7 (codified as WAC 296-155-59907), filed 5/7/74, effective 6/6/74.]

WAC 296-155-59908 Table 8.

TABLE 8
STANDARD 18 x 7 NONROTATING ROPE

		Breaking Strength in Tons of 2,000 Pounds	
DIAMETER Inches	**Approximate Weight per Foot Pounds**	**Improved Plow Steel**	**Mild Plow Steel**
3/8	0.24	5.59	4.86
7/16	.33	7.58	6.59
1/2	.43	9.85	8.57
9/16	.55	12.4	10.8
5/8	.68	15.3	13.3
3/4	.97	21.8	19.0
7/8	1.32	29.5	25.7
1	1.73	38.3	33.3
1 1/8	2.19	48.2	41.9
1 1/4	2.70	59.2	51.5
1 3/8	3.27	71.3	62.0
1 1/2	3.89	84.4	73.4
1 5/8	4.57	98.4	85.6
1 3/4	5.30	114.0	98.8

[Order 74-26, § 296-155-580 (part), Table 8 (codified as WAC 296-155-59908), filed 5/7/74, effective 6/6/74.]

WAC 296-155-59909 Table 9.

TABLE 9
STANDARD 6 x 12 GALVANIZED
RUNNING ROPE AND HAWSERS

		Breaking Strength in Tons of 2,000 Pounds		
DIAMETER Inches	**Approximate Weight Per Foot Pounds**	**Galvanized Improved Plow Steel**	**Galvanized Plow Steel**	**Galvanized Iron**
5/16	0.10	2.34	2.04	0.905
3/8	.15	3.36	2.92	1.30
7/16	.20	4.55	3.95	1.76
1/2	.26	5.91	5.14	2.28
9/16	.33	7.45	6.48	2.88
5/8	.41	9.16	7.97	3.54
3/4	.59	13.1	11.4	5.06
13/16	.6	15.3	13.3	5.92
7/8	.80	17.7	15.4	6.85
1	1.05	23.0	20.0	8.89
1 1/16	1.19	25.9	22.5	10.0
1 1/8	1.33	29.0	25.2	---
1 3/16	1.48	32.2	28.0	---
1 1/4	1.64	35.6	30.9	---
1 3/8	1.99	42.8	37.2	---
1 7/16	2.17	46.7	40.6	---
1 1/2	2.36	50.7	44.1	---
1 5/8	2.77	59.2	51.4	---
1 11/16	2.99	63.6	55.3	---
1 3/4	3.22	68.3	59.4	---
1 13/16	3.45	78.0	63.5	---
1 15/16	3.94	83.0	72.2	---
2	4.20	88.2	76.7	---
2 1/16	4.47	93.6	81.4	---

[Order 74-26, § 296-155-580 (part), Table 9 (codified as WAC 296-155-59909), filed 5/7/74, effective 6/6/74.]

WAC 296-155-59910 Table 10.

TABLE 10
STANDARD 6 x 25 GALVANIZED STEEL
MOORING LINES AND HAWSERS

		Breaking Strength in Tons of 2,000 Pounds	
DIAMETER Inches	**Approximate Weight per Foot Pounds**	**Galvanized Improved Plow Steel**	**Galvanized Plow Steel**
3/8	0.194	4.77	4.14
1/2	.35	8.40	7.30
5/8	.54	13.0	7.30
3/4	.78	18.6	16.2
13/16	.91	21.8	19.0
7/8	1.06	25.2	21.9
1	1.38	32.8	28.5
1 1/16	1.56	36.9	32.1
1 1/8	1.75	41.2	35.9
1 3/16	1.95	45.9	39.9
1 1/4	2.16	50.7	44.1
1 3/8	2.61	61.0	53.0
1 7/16	2.85	66.5	57.9
1 1/2	3.11	72.3	62.9
1 5/8	3.64	84.5	73.4
1 11/16	3.93	90.9	79.0
1 3/4	4.23	97.5	84.8
1 13/16	4.53	104.0	90.0
1 15/16	5.18	119.0	103.0
2	5.52	126.0	110.0
2 1/16	5.87	134.0	116.0

[Order 74-26, § 296-155-580 (part), Table 10 (codified as WAC 296-155-59910), filed 5/7/74, effective 6/6/74.]

WAC 296-155-59911 Table 11.

TABLE 11
STANDARD 6 x 37 GALVANIZED STEEL HAWSERS

		Breaking Strength in Tons of 2,000 Pounds	
DIAMETER **Inches**	**Approximate Weight per Foot** **Pounds**	**Improved Plow Steel**	**Plow Steel**
3/4	0.87	21.0	18.2
13/16	1.02	24.5	21.2
7/8	0.87	21.0	24.7
1	1.55	36.9	32.1
1 1/16	1.75	41.6	36.1
1 1/8	1.96	46.5	40.4
1 3/16	2.19	51.7	44.9
1 1/4	2.42	57.1	49.7
1 3/8	2.93	68.8	59.8
1 7/16	3.20	75.0	65.3
1 1/2	3.49	81.5	70.9
1 5/8	4.09	95.3	82.9
1 11/16	4.41	103.0	89.2
1 3/4	4.75	110.0	95.7
1 13/16	5.09	118.0	102.0
1 15/16	5.82	134.0	117.0
2	6.20	143.0	124.0
2 1/16	6.59	151.0	132.0
2 1.8	7.00	160.0	139.0
2 1/4	7.85	179.0	156.0
2 5/16	8.29	189.0	164.0
2 3/8	8.74	199.0	173.0

[Order 74-26, § 296-155-580 (part), Table 11 (codified as WAC 296-155-59911), filed 5/7/74, effective 6/6/74.]

WAC 296-155-59912. Table 12.

TABLE 12
STANDARD 6 x 25 TYPE "B" FLATTENED
STRAND WIRE ROPE[1]

		Breaking Strength in Tons of 2,000 Pounds	
DIAMETER Inches	**Approximate Weight per Foot Pounds**	**Improved Plow Steel**	**Plow Steel**
3/8	0.25	6.71	---
1/2	.45	11.8	8.94
9/16	.57	14.9	11.2
5/8	.70	18.3	13.9
3/4	1.01	26.2	19.8
7/8	1.39	35.4	26.8
1	1.80	46.0	34.8
1 1/8	2.28	57.9	43.8
1 1/4	2.81	71.0	53.7
1 3/8	3.40	85.5	---
1 1/2	4.05	101.0	---
1 5/8	4.75	118.0	---
1 3/4	5.51	136.0	---
2	7.20	176.0	---
2 1/4	9.10	220.0	---
2 1/2	11.20	269.0	---
2 3/4	13.60	321.0	---

[1] For these ropes when galvanized, deduct 10 percent form the above strengths.

[Order 74-26, § 296-155-580 (part), Table 12 (codified as WAC 296-155-59912), filed 5/7/74, effective 6/6/74.]

WAC 296-155-59913 Table 13.

TABLE 13
STANDARD 6 x 30 TYPE "G"
FLATTENED STRAND WIRE ROPE[1]

		Breaking Strength in Tons of 2,000 Pounds	
DIAMETER Inches	**Approximate Weight per Foot Pounds**	**Improved Plow Steel**	**Plow Steel**
5/8	0.70	18.3	13.9
3/4	1.01	26.2	19.8
7/8	1.39	35.4	26.8
1	1.80	46.0	34.8
1 1/8	2.28	57.9	43.8
1 1/4	2.81	71.0	53.7
1 3/8	3.40	85.5	---
1 1/2	4.05	101.0	---
1 5/8	4.75	118.0	---
1 3/4	5.51	136.0	---
2	7.20	176.0	---
2 1/4	9.10	220.0	---
2 1/2	11.20	269.0	---
2 3/4	13.60	321.0	---

[1] For these ropes with steel centers, add 7 1/2% to above strengths.

[Order 74-26, § 296-155-580 (part), Table 13 (codified as WAC 296-155-59913), filed 5/7/74, effective 6/6/74.]

WAC 296-155-59914 Table 14.

TABLE 14
STANDARD 6 x 8 TYPE "D"
FLATTENED STRAND WIRE ROPE

DIAMETER	Approximate Weight per Foot	Breaking Strength in Tons of 2,000 Pounds	
		Improved Plow Steel	Plow Steel
Inches	Pounds		
1/2	0.45	11.1	8.37
5/8	.70	17.1	12.9
3/4	1.01	24.4	18.5
7/8	1.39	33.0	24.9
1	1.80	42.7	32.3
1 1/8	2.28	53.5	40.5
1 1/4	2.81	65.5	49.5
1 3/8	3.40	78.6	59.4
1 1/2	4.05	92.7	70.1

[Order 74-26, § 296-155-580 (part), Table 14 (codified as WAC 296-155-59914), filed 5/7/74, effective 6/6/74.]

WAC 296-155-59915 Table 15.

TABLE 15
STANDARD 6 x 6 x 7 TILLER ROPE[1]

DIAMETER	Approximate Weight per Foot	Breaking Strength in Tons of 2,000 Pounds	
		Plow Steel	Iron
Inches	Pounds		
1/4	0.07	1.31	0.584
5/16	.11	2.05	.908
3/8	.16	2.93	1.30
7/16	.21	3.98	1.77
1/2	.28	5.18	2.30
9/16	.35	6.53	2.90
5/8	.43	8.04	3.57

[1] For these ropes with steel centers, add 7-1/2% to above strengths.

[Order 74-26, § 296-155-580 (part), Table 15 (codified as WAC 296-155-59915), filed 5/7/74, effective 6/6/74.]

WAC 296-155-59916 Table 16.

TABLE 16
STANDARD 9 x 4 GALVANIZED MAST ARM ROPE

Diameter (Inches)	Approximate Weight per Foot (Pounds)	Breaking Strength in Pounds
1/4	0.070	1,100
5/16	.107	1,530
3/8	.158	2,200

[Order 74-26, § 296-155-580 (part), Table 16 (codified as WAC 296-155-59916), filed 5/7/74, effective 6/6/74.]

WAC 296-155-59917 Table 17.

TABLE 17
STANDARD FLAT ROPE

			Breaking Strength in Tons of 2,000 Pounds	
Width and Thickness Inches	**Number Of Ropes**	**Approximate Weight per Foot Pounds**	**Plow Steel**	**Mild Plow Steel**
1/4 x 1-1/2	7	0.69	16.8	14.6
1/4 x 2	9	.88	21.7	18.8
1/4 x 2-1/2	11	1.15	26.5	23.0
1/4 x 3	13	1.34	31.3	27.2
5/16 x 1-1/2	5	.77	18.5	16.0
5/16 x 2	7	1.05	25.8	22.4
5/16 x 2-1/2	9	1.33	33.2	28.8
5/16 x 3	11	1.61	40.5	35.3
5/16 x 3-1/2	13	1.89	47.9	41.7
5/16 x 4	15	2.17	55.3	48.1
3/8 x 2	6	1.25	31.4	27.3
3/8 x 2-1/2	8	1.64	41.8	36.4
3/8 x 3	9	1.84	47.1	40.9
3/8 x 3-1/2	11	2.23	57.5	50.0
3/8 x 4	12	2.44	62.7	54.6
3/8 x 4-1/2	14	2.83	73.2	63.7
3/8 x 5	15	3.03	78.4	68.2
3/8 x 5-1/2	17	3.42	88.9	77.3
3/8 x 6	18	3.63	94.1	81.9
1/2 x 2-1/2	6	2.13	54.5	47.4
1/2 x 3	7	2.47	63.6	55.4
1/2 x 3-1/2	8	2.82	72.7	63.3
1/2 x 4	9	3.16	81.8	71.2
1/2 x 4-1/2	10	3.82	90.9	79.1
1/2 x 5	12	4.16	109.0	94.9
1/2 x 5-1/2	13	4.50	118.0	103.0
1/2 x 6	14	4.85	127.0	111.0
1/2 x 7	16	5.85	145.0	126.0
5/8 x 3-1/2	6	3.40	85.8	74.6
5/8 x 4	7	3.95	100.0	87.1
5/8 x 4-1/2	8	4.50	114.0	99.5
5/8 x 5	9	5.04	129.0	112.0
5/8 x 5-1/2	10	5.59	143.0	124.0
5/8 x 6	11	6.14	157.0	137.0
5/8 x 7	13	7.23	186.0	162.0
5/8 x 8	15	8.32	214.0	186.0
3/4 x 5	8	6.50	165.0	143.0
3/4 x 6	9	7.31	185.0	161.0
3/4 x 7	10	8.13	206.0	179.0

WAC 296-155-59917 Table 17.

TABLE 17
STANDARD FLAT ROPE (Cont.)

			Breaking Strength in Tons of 2,000 Pounds	
Width and Thickness Inches	**Number Of Ropes**	**Approximate Weight per Foot Pounds**	**Plow Steel**	**Mild Plow Steel**
3/4 x 8	11	9.70	227.0	197.0
7/8 x 5	7	7.50	190.0	165.0
7/8 x 6	8	8.56	217.0	188.0
7/8 x 7	9	9.63	244.0	212.0
7/8 x 8	10	10.69	271.0	236.0

[Order 74-26, § 296-155-580 (part), Table 17 (codified as WAC 296-155-59917), filed 5/7/74, effective 6/6/74.]

WAC 296-155-59918 Table 18.

TABLE 18
STANDARD 6 x 12 MARLINE CLAD
GRAIN-SHOVEL ROPE

Before Serving (Inches)	After Serving (Inches)	Approximate weight per Foot (Pounds)	Breaking Strength Tons of 2,000 Pounds
3/4	5/8	0.25	2.50
7/8	¾	.43	5.50

[Order 74-26, § 296-155-580 (part), Table 18 (codified as WAC 296-155-59918), filed 5/7/74, effective 6/6/74.]

WAC 296-155-59919 Table 19.

TABLE 19
STANDARD 6 x 7 IRON, BRIGHT, AND GALVANIZED SASH CORDS

DIAMETER	Approximate Weight Per Foot	BREAKING STRENGTH Hand Drawn (Iron) Bright	Galvanized	Annealed Bright or Galvanized
Inches	Pounds	Pounds	Pounds	Pounds
1/16	0.006	140	126	77
3/32	.103	315	283	172
1/8	.023	560	504	306
5/32	.038	840	756	478
3/16	.053	1,150	1,035	688
7/32	.072	1,570	1,413	940
1/4	.094	2,040	1,836	1,225

[Order 74-26, § 296-155-580 (part), Table 19 (codified as WAC 296-155-59919), filed 5/7/74, effective 6/6/74.]

WAC 296-155-59920 Table 20.

TABLE 20
STANDARD 6 x 7 GALVANIZED IRON RIGGING AND GUY ROPE

Diameter (Inches)	Approximate Weight Per Foot (Pounds)	Breaking Strength in Tons of 2,000 Pounds
6 Strands		
1/4	0.94	0.918
5/16	.15	1.42
3/8	.21	2.04
7/16	.29	2.76
1/2	.38	3.58
9/16	.48	4.51
5/8	.59	5.54
3/4	.84	7.90
13/16	.99	9.23
7/8	1.15	10.7
1	1.50	13.8
1 1/16	1.70	15.5
1 1/8	1.90	17.3
1 3/16	2.12	19.2
1 1/4	2.34	21.2

[Order 74-26, § 296-155-580 (part), Table 20 (codified as WAC 296-155-59920), filed 5/7/74, effective 6/6/74.]

PART M
MOTOR VEHICLES, MECHANIZED EQUIPMENT, AND MARINE OPERATIONS

WAC 296-155-600 Definitions applicable to this part.

(1) **"Apron"** means the area along the waterfront edge of the pier or wharf.

(2) **"Bearing cap"** means:

(a) A slab of reinforced concrete or a heavy timber and plank platform covering the top of a group of piles for the purpose of typing them together and transmitting to them as a group the superimposed load.

(b) A metal plate placed across the top of a steel tube pile to distribute the load from the steel tube to the concrete.

(3) **"Bearing pile"** means a column of wood, metal or concrete or a combination of two or more of these materials, driven, jacked, or sunk with a water jet, into the earth to transmit and distribute loads to strata below the surface.

(4) **"Bulwark"** means the side of a ship above the upper deck.

(5) **"Caisson pile"** means a concrete pile case in an outer casing consisting of a series of telescoping steel tubes, the top section being the largest and usually twenty inches or more in diameter.

(6) **"Coaming"** means the raised frame, as around a hatchway in the deck, to keep out water.

(7) **"Composite pile"** means a pile which consists of a concrete pile superimposed on a wood pile.

(8) **"Jacob's ladder"** means a marine ladder of rope or chain with wooden or metal rungs.

(9) (a) A **"pedestal type"** concrete pile means a cast-in-place pile with an enlarged (mushroom) base or foot.

(b) A **"tapered type"** concrete pile means a cast-in-place pile cast in a tapered metal shell.

(10) **"Precast concrete pile"** means a pile which is cast in a form above ground.

(11) **"Driving cap"** means a device placed on the top of a pile to prevent its breakage or injury during the driving operation.

(12) **"H-pile"** means a pile formed of a structural steel column of "H" section.

(13) **"Pile driver"** means a device or piece of equipment used in driving piles.

(14) **"Pretest or jack pile"** means a steel cylinder pile driven in section beneath an existing building and filled with concrete.

(15) **"Rail,"** for the purpose of WAC 296-155-630, means a light structure serving as a guard at the outer edge of a ship's deck.

(16) **"Sheet piling"** means a continuous vertical barricade consisting of squared timbers driven edge to edge, either square edged or tongued and grooved, or of a series of inter- locking steel shapes, to form a temporary wall about an excavation, and shored and braced as necessary.

WAC 296-155-600 (Cont.)

(17) **"Steel-tube"** means a concrete-filled steel cylinder, consisting of an open or closed-end steel tube or cylinder.

(18) **"Wood pile"** means a pile which is formed from the trunk of a tree or dimension timbers.
[Order 74-26, § 296-155-600, filed 5/7/74, effective 6/6/74.]

WAC 296-155-605 Equipment.

(1) General requirements.

(a) All equipment left unattended at night, adjacent to a highway in normal use, or adjacent to construction areas where work is in progress, shall have appropriate lights or reflectors, or barricades equipped with appropriate lights or reflectors, to identify the location of the equipment.

(b) All tire servicing of multi-piece and single-piece rim wheels are subject to the requirements of WAC 296-155-61701 through 296-155-61713.

(c) (i) Heavy machinery, equipment, or parts thereof, which are suspended or held aloft by use of slings, hoists, or jacks shall be substantially blocked or cribbed to prevent falling or shifting before employees are permitted to work under or between them. Bulldozer and scraper blades, end-loader buckets, dump bodies, and similar equipment, shall be either fully lowered or blocked when being repaired or when not in use. All controls shall be in a neutral position, with the motors stopped and brakes set, unless work being performed required otherwise.

(ii) Whenever the equipment is parked, the parking brake shall be set. Equipment parked on inclines shall have the wheels chocked and the parking brake set.

(d) The use, care and charging of all batteries shall conform to the requirements of part I of this chapter.

(e) All cab glass shall be safety glass, or equivalent, that introduces no visible distortion affecting the safe operation of any machine covered by this part.

(f) All equipment covered by this part shall comply with the requirements of WAC 296-155-525 (3)(a) when working or being moved in the vicinity of power lines or energized transmitters.

(g) Where traffic is diverted onto dusty surfaces, good visibility shall be maintained by the suppression of dust, through the periodic application of oil or water to the grade surface, as required.

(h) No equipment, vehicle, tool, or individual shall operate within 10 feet of any power line or electrical distribution equipment except in conformity with the requirements of WAC 296-155-525 (3)(a).

(2) Specific requirements. (Reserved.)
[Statutory Authority: RCW 49.17.010, .040, .050,.060 RCW. 98-05-046 (Order 97-10), 296-155-605, filed 2/13/98, effective 4/15/98. RCW 49.17.040 and 49.17.050. 86-03-074 (Order 86-14), 296-155-605, filed 1/21/86; Order 74-26, 296-155-605, filed 5/7/74, effective 6/6/74.]

WAC 296-155-610 Motor vehicles.

(1) Coverage. Motor vehicles as covered by this part include any vehicles that operate on a construction site. The requirements of this section do not apply to equipment for which rules are prescribed in WAC 296-155-615.

(2) General requirements.

(a) All vehicles shall have a service brake system, an emergency brake system, and a parking brake system. These systems may use common components, and shall be maintained in operable condition.

(b) Before leaving a motor vehicle unattended:

(i) The motor shall be stopped.

(ii) Parking brake engaged and wheels turned into curb or berm when parked on an incline.

(iii) When parking on an incline and there is no curb or berm, the wheels shall be chocked or otherwise secured.

(c) (i) Whenever visibility conditions warrant additional light, all vehicles, or combinations of vehicles, in use shall be equipped with at least two headlights and two taillights in operable condition.

(ii) All vehicles, or combination of vehicles, shall have brake lights in operable condition regardless of light conditions.

(d) All vehicles shall be equipped with an adequate audible warning device at the operator's station and in an operable condition.

(e) No employer shall allow the use of any motor vehicle equipment having an obstructed view to the rear unless:

(i) Vehicles other than passenger cars and pickups shall have an automatic reverse signal alarm audible above the surrounding noise level no less than fifteen feet from the rear of the vehicle or:

(ii) The vehicle is backed up only when an observer signals that it is safe to do so.

(f) All vehicles with cabs shall be equipped with windshields, powered wipers, and rear view mirrors. Cracked and broken glass shall be replaced. Vehicles operating in areas or under conditions that cause fogging or frosting of the windshields shall be equipped with operable defogging or defrosting devices.

(g) All haulage vehicles, whose pay load is loaded by means of cranes, power shovels, loaders, or similar equipment, shall have a cab shield and/or canopy adequate to protect the operator from shifting or falling materials.

(h) Tools and material shall be secured to prevent movement when transported in the same compartment with employees.

(i) Vehicles used to transport employees shall have seats firmly secured and adequate for the number of employees to be carried.

WAC 296-155-610 (Cont.)

(j) Seat belts and anchorages meeting the requirements of 49 CFR Part 571 (Department of Transportation, Federal Motor Vehicle Safety Standards) shall be installed in all motor vehicles.

(k) Trucks with dump bodies or raiseable platforms, beds, or boxes shall be equipped with positive means of support, permanently attached, and capable of being locked in position to prevent accidental lowering of the body while maintenance or inspection work is being done.

(l) Operating levers, controlling hoisting or dumping devices on haulage bodies, shall be equipped with a latch or other device which will prevent accidental starting or tripping of the mechanism.

(m) Trip handles for tailgates of dump trucks shall be so arranged that, in dumping, the operator will be in the clear.

(n) All rubber-tired motor vehicle equipment manufactured on or after May 1, 1972, shall be equipped with fenders. All rubber-tired motor vehicle equipment manufactured before May 1, 1972, shall be equipped with fenders not later than October 1, 1974. Mud flaps may be used in lieu of fenders whenever motor vehicle equipment is not designed for fenders.

(o) All vehicles in use shall be checked at the beginning of each shift to assure that the following parts, equipment, and accessories are in safe operating condition and free of apparent damage that could cause failure while in use: Service brakes, including trailer brake connections; parking system (hand brake); emergency stopping system (brakes); tires; horn; steering mechanism; coupling devices; seat belts; operating controls; and safety devices. All defects shall be corrected before the vehicle is placed in service. These requirements also apply to equipment such as lights, reflectors, windshield wipers, defrosters, fire extinguishers, steps and handholds for vehicle access, etc., where such equipment is necessary.

[Statutory Authority: RCW 49.17.040 and 49.17.050. 86-03-074 (Order 86-14), § 296-155-610, filed 1/21/86; Order 74-26, § 296-155-610, filed 5/7/74, effective 6/6/74.]

WAC 296-155-615 Material handling equipment.

(1) Earthmoving equipment; general.

(a) These rules apply to the following types of earth-moving equipment: Scrapers, loaders, crawler or wheel tractors, bulldozers, off-highway trucks, graders, agricultural and industrial tractors, and similar equipment. The promulgation of specific rules for compactors and rubber-tired “skid-steer” equipment is reserved pending consideration of standards currently being developed.

(b) Seat belts.

(i) Seat belts shall be provided on all equipment covered by this section and shall meet the requirements of the Society of Automotive Engineers, J386-1969, Seat Belts for Construction Equipment. Seat belts for agricultural and light industrial tractors shall meet the seat belt requirements of Society of Automotive Engineers J333a-1970, Operator Protection for Agricultural and Light Industrial Tractors.

(ii) Seat belts need not be provided for equipment which is designed only for standup operation.

(iii) Seat belts shall not be provided for equipment which does not have rollover protective structure (ROPS) or adequate canopy protection.

WAC 296-155-615 (Cont.)

(c) Access roadways and grades.

(i) No employer shall move or cause to be moved construction equipment or vehicles upon any access roadway or grade unless the access roadway or grade is constructed and maintained to accommodate safely the movement of the equipment and vehicles involved.

(ii) Every emergency access ramp and berm used by an employer shall be constructed to restrain and control runaway vehicles.

(d) Brakes. All earthmoving equipment mentioned in WAC 296-155-615 (1)(a) shall have a service braking system capable of stopping and holding the equipment fully loaded, as specified in Society of Automotive Engineers SAE-J237, Loader Dozer-197l, J236, Graders-1971, and J319b, Scrapers-1971. Brake systems for self-propelled rubber-tired off-highway equipment manufactured after January 1, 1972 shall meet the applicable minimum performance criteria set forth in the following Society of Automotive Engineers Recommended Practices:

Self-propelled scrapers	SAE J319b-1971
Self-propelled graders	SAE J236-1971
Truck and wagons	SAE J166-1971
Front-end loaders and dozers	SAE J237-1971

(e) Fenders. Pneumatic-tired earthmoving haulage equipment (trucks, scrapers, tractors, and trailing units) whose maximum speed exceeds 15 miles per hour, shall be equipped with fenders on all wheels to meet the requirements of Society of Automotive Engineers SAE J321a-1970, Fenders for Pneumatic-Tired Earthmoving Haulage Equipment. An employer may, of course, at any time seek to show under WAC 296-155-010, that the uncovered wheels present no hazard to personnel from flying materials.

(f) Rollover protective structures (ROPS). See Part V of this chapter for requirements for rollover protective structures and overhead protection.

(g) Rollover protective structures for off-highway trucks. The promulgation of standards for rollover protective structures for off-highway trucks is reserved pending further study and development.

(h) Specific effective dates-Brakes and fenders. Equipment mentioned in WAC 296-155-615 (d) and (e) and manufactured after January 1, 1972, which is used by any employer after that date, shall comply with the applicable rules prescribed therein concerning brakes. Equipment mentioned in WAC 296-155-615 (d) and (e) and manufactured before January 1, 1972, which is used by any employer after that date, shall meet the applicable rules prescribed herein not later than October 1, 1974. It should be noted that employers may request variations from the applicable brakes standards required by this part. Employers wishing to seek variations from the applicable brakes rules may submit any requests for variations in accordance with WAC 296-155-010. Any statements should specify how the variation would protect the safety of the employees by providing for any compensating restrictions on the operation of equipment.

WAC 296-155-615 (Cont.)

(i) Audible alarms.

(i) All bidirectional machines, such as rollers, compactors, front-end loaders, bulldozers, and similar equipment, shall be equipped with a horn, distinguishable from the surrounding noise level, which shall be operated as needed when the machine is moving in either direction. The horn shall be maintained in an operative condition.

(ii) No employer shall permit earthmoving or compacting equipment which has an obstructed view to the rear to be used in reverse gear unless the equipment has in operation a reverse signal alarm distinguishable from the surrounding noise level or an employee signals that it is safe to do so.

(iii) In circumstances where the surrounding noise level is of such amplitude that reverse signal alarms are not effective, amber strobe lights shall be used.

(iv) Operators of equipment which does not have an obstructed view to the rear shall look to the rear while operating the equipment in reverse.

(j) Scissor points. Scissor points on all front-end loaders, which constitute a hazard to the operator during normal operation, shall be guarded.

(k) Tractor motors shall be cranked only by operators or other experienced persons.

(l) Waterproof and comfortable seat cushions shall be provided on tractors at all times when working.

(m) Riders, except mechanics and persons in training to operate equipment, shall not be allowed on equipment unless a seat with a seatbelt is provided and used.

(n) Winch lines shall be maintained in good condition and provided with spliced eye, knob or hook in working end, except under conditions where unspliced end is required.

(o) No repairs on blade or dozer equipment shall be initiated unless motor has been stopped and dozer blade is resting on the ground or securely blocked. The same shall apply to carry-all gates.

(p) Bulldozer blades and carryall gates shall rest on the ground or on blocking when machines are not in operation.

(q) Operator shall not leave controls of tractor with master clutch engaged.

(r) Personnel shall not get on or off machine while machine is in motion.

(s) Where excessive dust conditions are created, such areas shall be sprinkled with water to maintain dust at a minimum.

(t) Respirators shall be worn by operators when subject to harmful dust exposure.

(2) Excavating and other equipment.

(a) Tractors covered in subsection (1) of this section shall have seat belts as required for the operators when seated in the normal seating arrangement for tractor operation, even though backhoes, breakers, or other similar attachments are used on these machines for excavating or other work.

WAC 296-155-615 (Cont.)

(b) For the purposes of this part and of Part L of this chapter, the nomenclatures and descriptions for measurement of dimensions of machinery and attachments shall be as described in Society of Automotive Engineers 1970 Handbook, pages 1088 through 1103.

(c) The safety requirements, ratios, or limitations applicable to machines or attachment usage covered in Power Crane and Shovel Association's Standards No. 1 and No. 2 of 1968, and No. 3 of 1969, shall be complied with, and shall apply to cranes, machines, and attachments under this part.

(3) Lifting and hauling equipment (other than equipment covered under Part L of this chapter). Industrial trucks (including forklifts) shall meet the requirements of WAC 296-24-230, 296-155-605 and the following:

(a) Lift trucks, stackers, etc., shall have the rated capacity clearly posted on the vehicle so as to be clearly visible to the operator. When auxiliary removable counter-weights are provided by the manufacturer, corresponding alternate rated capacities also shall be clearly shown on the vehicle. These ratings shall not be exceeded.

(b) No modifications or additions which affect the capacity or safe operation of the equipment shall be made without the manufacturer's or professional engineer's written approval. If such modifications or changes are made, the capacity, operation, and maintenance instruction plates, tags, or decals, shall be changed accordingly. In no case shall the original safety factor of the equipment be reduced.

(c) If a load is lifted by two or more trucks working in unison, the proportion of the total load carried by any one truck shall not exceed its capacity.

(d) Steering or spinner knobs shall not be attached to the steering wheel unless the steering mechanism is of a type that prevents road reactions from causing the steering handwheel to spin. The steering knob shall be mounted within the periphery of the wheel.

(e) All high lift rider industrial trucks shall be equipped with overhead guards which meet the configuration and structural requirements as defined in paragraph 502 of American National Standards Institute B56.1-1975, Safety Standards for Powered Industrial Trucks.

(f) All industrial trucks in use shall meet the applicable requirements of design, construction, stability, inspection, testing, maintenance, and operation, as defined in American National Standards Institute B56.1-1975, Safety Standards for Powered Industrial Trucks.

(g) Unauthorized personnel shall not be permitted to ride on powered industrial trucks. A safe place to ride shall be provided where riding of trucks is authorized.

(h) When a forklift truck is used for elevating workers a platform shall be specifically built for that purpose and shall comply with the following requirements:

(i) The platform shall be securely attached to the forks and shall have standard guardrails and toeboards on all open sides.

(ii) The hydraulic system of the forklift shall be so designed that the lift mechanism will not drop faster than one hundred thirty-five feet per minute in the event of a failure in any part of the system. Forklifts used for elevating platforms shall be identified that they are so designed.

WAC 296-155-615 (Cont.)

(iii) A safety strap shall be installed or the control lever shall be locked to prevent the boom from tilting.

(iv) An operator shall be at the controls of the forklift equipment while persons are on the platform.

(v) The operator shall be in the normal operating position while raising or lowering the platform.

(vi) The vehicle shall not travel from point to point while workers are on the platform except that inching or maneuvering at very slow speed is permissible.

(vii) The area between workers on the platform and the mast shall be adequately guarded to prevent contact with chains or other shear points.

(viii) All platforms shall be visually inspected daily or before each use by the person in charge of the work being performed, and shall be tested as frequently as is necessary to maintain minimum safety factors.

(ix) Whenever a truck, except for high lift order picker trucks, is equipped with vertical hoisting controls elevatable with the lifting carriage or forks, the following precautions shall be taken for the protection of personnel being elevated.

(A) Provide a platform secured to the lifting carriage and/or forks.

(B) Provide means whereby personnel on the platform can shut off power to the truck.

(C) Provide such protection from falling objects as indicated necessary by the operating conditions.

[Statutory Authority: RCW 49.17.010, .040, .050. 00-01-176 (Order 99-18), § 296-155-615, filed 12/21/99, effective 03/01/2000. Statutory Authority: Chapter 49.17.010, .040, .050, .060 RCW. 98-05-046 (Order 97-10), 296-155-615, filed 2/13/98, effective 4/15/98. Chapter 49.17 RCW. 94-15-096 (Order 94-07), 296-155-615, filed 7/20/94, effective 9/20/94. Statutory Authority: RCW 49.17.040 and 49.17.050. 86-03-074 (Order 86-14), 296-155- 615, filed 1/21/86; Order 74-26, 296-155-615, filed 5/7/74, effective 6/6/74.]

WAC 296-155-617 Servicing multipiece and single-piece rim wheels.

[Statutory Authority: RCW 49.17.040 and 49.17.050. 86-03-074 (Order 86-14), § 296-155-617, filed 1/21/86.]

WAC 296-155-61701 Scope.

(1) Application. This section applies to the servicing of multipiece and single-piece rim wheels used on large vehicles such as trucks, tractors, trailers, buses and off-road machines. It does not apply to the servicing of rim wheels used on automobiles, or on pickup trucks and vans utilizing automobile tires or truck tires designated “LT.”

(2) All provisions of this section apply to the servicing of both single-piece rim wheels and multipiece rim wheels unless designated otherwise.

[Statutory Authority: RCW 49.17.040 and 49.17.050. 86-03-074 (Order 86-14), § 296-155-61701, filed 1/21/86.]

WAC 296-155-61703 Definitions.

(1) **"Barrier"** means a fence, wall or other structure or object placed between a single-piece rim wheel and an employee during tire inflation, to contain the rim wheel components in the event of the sudden release of the contained air of the single-piece rim wheel.

(2) **"Charts"** means the United States Department of Transportation, National Highway Traffic Safety Administration (NHTSA) publications entitled *Safety Precautions for Mounting and Demounting Tube-Type Truck/Bus Tires* and *Multipiece Rim Wheel Matching Chart,* or any other publications such as rim manuals containing, at a minimum, the same instructions, safety precautions and other information contained on those charts that are applicable to the types of rim wheels being serviced.

(3) **"Installing a rim wheel"** means the transfer and attachment of an assembled rim wheel onto a vehicle axle hub. **"Removing"** means the opposite of installing.

(4) **"Mounting a tire"** means the assembly or putting together of the wheel and tire components to form a rim wheel, including inflation. **"Demounting"** means the opposite of mounting.

(5) **"Multipiece rim wheel"** means the assemblage of a multipiece wheel with the tire tube and other components.

(6) **"Multipiece wheel"** means a vehicle wheel consisting of two or more parts, one of which is a side or locking ring designed to hold the tire on the wheel by interlocking components when the tire is inflated.

(7) **"Restraining device"** means an apparatus such as a cage, rack, assemblage of bars and other components that will constrain all rim wheel components during an explosive separation of a multipiece rim wheel, or during the sudden release of the contained air of a single-piece rim wheel.

(8) **"Rim manual"** means a publication containing instructions from the manufacturer or other qualified organization for correct mounting, demounting, maintenance, and safety precautions peculiar to the type of wheel being serviced.

(9) **"Rim wheel"** means an assemblage of tire, tube and liner (where appropriate), and wheel components.

(10) **"Service" or "servicing"** means the mounting and demounting of rim wheels, and related activities such as inflating, deflating, installing, removing, and handling.

(11) **"Service area"** means that part of an employer's premises used for the servicing of rim wheels, or any other place where an employee services rim wheels.

(12) **"Single-piece rim wheel"** means the assemblage of single-piece rim wheel with the tire and other components.

(13) **"Single-piece wheel"** means a vehicle wheel consisting of one part, designed to hold the tire on the wheel when the tire is inflated.

(14) **"Trajectory"** means any potential path or route that a rim wheel component may travel during an explosive separation, or the sudden release of the pressurized air, or an area at which an airblast from a single-piece rim wheel may be released. The trajectory may deviate from paths which are perpendicular to the assembled position of the rim wheel at the time of separation or explosion. (See Appendix A for examples of trajectories.)

WAC 296-155-61703 (Cont.)

(15) **"Wheel"** means that portion of a rim wheel which provides the method of attachment of the assembly to the axle of a vehicle and also provides the means to contain the inflated portion of the assembly (i.e., the tire and/or tube).

[Statutory Authority: RCW 49.17.040 and 49.17.050. 86-03-074 (Order 86-14), § 296-155-61703, filed 1/21/86.]

WAC 296-155-61705 Employee training.

(1) Employer responsibility. The employer shall provide a program to train all employees who service rim wheels in the hazards involved in servicing those multipiece rim wheels and the safety procedures to be followed.

(a) The employer shall assure that no employee services any rim wheel unless the employee has been trained and instructed in correct procedures of servicing the type of wheel being serviced, and in the safe operating procedures described in WAC 296-24-21711.

(b) Information to be used in the training program shall include, at a minimum, the applicable data contained in the charts (rim manuals) and the contents of this standard.

(c) Where an employer knows or has reason to believe that any of the employees are unable to read and understand the charts or rim manual, the employer shall assure that the employee is instructed concerning the contents of the charts and rim manual in a manner which the employee is able to understand.

(2) Employee qualification. The employer shall assure that each employee demonstrates and maintains the ability to service rim wheels safely, including performance of the following tasks:

(a) Demounting of tires (including deflation);

(b) Inspection and identification of the rim wheel components;

(c) Mounting of tires (including inflation with a restraining device or other safeguard required by this section);

(d) Use of the restraining device or barrier, and other equipment required by this section;

(e) Handling of rim wheels;

(f) Inflation of the tire when a single-piece rim wheel is mounted on a vehicle;

(g) An understanding of the necessity of standing outside the trajectory both during inflation of the tire and during inspection of the rim wheel following inflation; and

(h) Installation and removal of wheels.

(3) Ongoing training. The employer shall evaluate each employee's ability to perform these tasks and to service rim wheels safely and shall provide additional training as necessary to assure that each employee maintains his or her proficiency.

[Statutory Authority: Chapter 49.17 RCW. 94-15-096 (Order 94-07), § 296-155-61705, filed 7/20/94, effective 9/20/94. Statutory Authority: RCW 49.17.040 and 49.17.050. 86-03-074 (Order 86-14), § 296-155-61705, filed 1/21/86.]

WAC 296-155-61707 Tire servicing equipment.

(1) Restraining device - Multipiece. The employer shall furnish a restraining device for inflating tires on multipiece wheels.

(2) Restraining device - Single-piece. The employer shall provide a restraining device or barrier for inflating tires on single-piece wheels unless the rim wheel will be bolted onto a vehicle during inflation.

(3) Restraining device requirements. Restraining devices and barriers shall comply with the following requirements:

(a) Each restraining device or barrier shall have the capacity to withstand the maximum force that would be transferred to it during a rim wheel separation occurring at one hundred fifty percent of maximum tire specification pressure for the type of rim wheel being serviced;

(b) Restraining devices and barriers shall be capable of preventing rim components from being thrown outside or beyond the device or barrier for any rim wheel position within or behind the device;

(c) Restraining devices and barriers shall be visually inspected prior to each day's use and after any separation of the rim wheel components or sudden release of contained air. Any restraining device or barrier exhibiting damage such as the following defects shall be immediately removed from service:

(i) Cracks at welds;

(ii) Cracked or broken components;

(iii) Bent or sprung components caused by mishandling, abuse, tire explosion or rim wheel separation;

(iv) Pitting of components due to excessive corrosion; or

(v) Other structural damage which would decrease its effectiveness.

(d) Restraining devices removed from service shall not be returned to service until they are repaired and reinspected. Restraining devices or barriers requiring structural repair such as component replacement or rewelding shall not be returned to service until they are certified either by the manufacturer or by a registered professional engineer as meeting the strength requirements of subsection (3)(a) of this section.

(4) Air line assembly. The employer shall furnish and assure that an air line assembly consisting of the following components be used for inflating tires:

(a) A clip-on chuck;

(b) An in-line valve with a pressure gauge or a presettable regulator; and

(c) A sufficient length of hose between the clip-on chuck and the in-line valve (if one is used) to allow the employee to stand outside the trajectory.

WAC 296-155-61707 (Cont.)

(5) Rim manuals. Current charts (rim manuals) containing instructions for the types of wheels being serviced shall be available in the service area.

(6) Rim manual availability. A current rim manual containing instructions for the type of rims being serviced shall be available in the service area.

(7) Recommended servicing tools. The employer shall furnish and assure that only tools recommended in the rim manual for the type of wheel being serviced are used to service rim wheels.

[Statutory Authority: RCW 49.17.040 and 49.17.050. 86-03-074 (Order 86-14), § 296-155-61707, filed 1/21/86.]

WAC 296-155-61709 Wheel component acceptability.

(1) Interchange of components. Multipiece wheel components shall not be interchanged except as provided in the charts, or in the applicable rim manual.

(2) Inspection of components. Multipiece wheel components and single-piece wheels shall be inspected prior to assembly. Any wheel or wheel component which is bent out of shape, pitted from corrosion, broken or cracked shall not be used and shall be marked or tagged unserviceable and removed from the service area. Damaged or leaky valves shall be replaced.

(3) Condition of components. Rim flanges, rim gutters, rings, bead seating surfaces and the bead areas of tires shall be free of any dirt, surface rust, scale or loose or flaked rubber build-up prior to mounting and inflation.

(4) Compatibility check. The size (bead diameter and tire/wheel widths) and type of both the tire and the wheel shall be checked for compatibility prior to assembly of the rim wheel.

[Statutory Authority: RCW 49.17.040 and 49.17.050. 86-03-074 (Order 86-14), § 296-155-61709, filed 1/21/86.]

WAC 296-155-61711 Safe operating procedure-Multipiece rim wheels. The employer shall establish a safe operating procedure for servicing multipiece rim wheels and shall assure that employees are instructed in and follow that procedure. The procedure shall include at least the following elements:

(1) Deflation before demounting. Tires shall be completely deflated before demounting by removal of the valve core.

(2) Deflation on axle. Tires shall be completely deflated by removing the valve core, before a rim wheel is removed from the axle in either of the following situations:

(a) When the tire has been driven underinflated at eighty percent or less of its recommended pressure; or

(b) When there is obvious or suspected damage to the tire or wheel components.

(3) Rubber lubricant. Rubber lubricant shall be applied to bead and rim mating surfaces during assembly of the wheel and inflation of the tire, unless the tire or wheel manufacturer recommends against it.

(4) Inflation of tire while on vehicle. If a tire on a vehicle is underinflated but has more than eighty percent of the recommended pressure, the tire may be inflated while the rim wheel is on the vehicle provided remote control inflation equipment is used, and no employees remain in the trajectory during inflation.

WAC 296-155-61711 (Cont.)

(5) Tire bead. Tires shall be inflated outside a restraining device only to a pressure sufficient to force the tire bead onto the rim ledge and create an airtight seal with the tire and bead.

(6) Restraining device clearance. Whenever a rim wheel is in a restraining device the employee shall not rest or lean any part of the body or equipment on or against the restraining device.

(7) Inspection of components. After tire inflation, the tire and wheel components shall be inspected while still within the restraining device to make sure that they are properly seated and locked. If further adjustment to the tire or wheel components is necessary, the tire shall be deflated by removal of the valve core before the adjustment is made.

(8) Use of force. No attempt shall be made to correct the seating of side and lock rings by hammering, striking or forcing the components while the tire is pressurized.

(9) Damaged components. Cracked, broken, bent, or otherwise damaged rim components shall not be reworked, welded, brazed, or otherwise heated.

(10) Trajectory clearance. Whenever multipiece rim wheels are being handled, employees shall stay out of the trajectory unless the employer can demonstrate that performance of the servicing makes the employee's presence in the trajectory necessary.

(11) Wheel heating prohibition. No heat shall be applied to a multi-piece wheel or wheel component.
[Statutory Authority: Chapter 49.17 RCW. 94-15-096 (Order 94-07), § 296-155-61711, filed 7/20/94, effective 9/20/94. Statutory Authority: RCW 49.17.040 and 49.17.050. 86-03-074 (Order 86-14), § 296-155-61711, filed 1/21/86.]

WAC 296-155-61713 Safe operating procedure-Single-piece rim wheels. The employer shall establish a safe operating procedure for servicing single-piece rim wheels and shall assure that employees are instructed in and follow that procedure. The procedure shall include at least the following elements:

(1) Deflation. Tires shall be completely deflated by removal of the valve core before demounting.

(2) Mounting and demounting. Mounting and demounting of the tire shall be done only from the narrow ledge side of the wheel. Care shall be taken to avoid damaging the tire beads while mounting tires on wheels. Tires shall be mounted only on compatible wheels of matching bead diameter and width.

(3) Lubricant. Nonflammable rubber lubricant shall be applied to bead and wheel mating surfaces before assembly of the rim wheel, unless the tire or wheel manufacturer recommends against the use of any rubber lubricant.

(4) Changing machine. If a tire changing machine is used, the tire shall be inflated only to the minimum pressure necessary to force the tire bead onto the rim ledge while on the tire changing machine.

(5) Bead expander. If a bead expander is used, it shall be removed before the valve core is installed and as soon as the rim wheel becomes airtight (the tire bead slips onto the bead seat).

(6) Inflation restrictions. Tires may be inflated only when contained within a restraining device, positioned behind a barrier or bolted on the vehicle with the lug nuts fully tightened.

(7) Inflation trajectory. Tires shall not be inflated when any flat, solid surface is in the trajectory and within one foot of the sidewall.

WAC 296-155-61713 (Cont.)

(8) Employee safety. Employees shall stay out of the trajectory when inflating a tire.

(9) Inflation pressure. Tires shall not be inflated to more than the inflation pressure stamped in the sidewall unless a higher pressure is recommended by the manufacturer.

(10) Seating tire bead. Tires shall not be inflated above the maximum pressure recommended by the manufacturer to seat the tire bead firmly against the rim flange.

(11) Prohibition on use of heat. No heat shall be applied to a single-piece wheel.

(12) Mixing tire and rim sizes. Employee shall be informed of the hazard created by mixing 16" and 16.5" tires and rims.

(13) Defective components. Cracked, broken, bent, or otherwise damaged wheels shall not be reworked, welded, brazed, or otherwise heated.

APPENDIX A
TRAJECTORY

WARNING

STAY OUT OF
THE TRAJECTORY AS
INDICATED BY SHADED AREA

Note: Under some circumstances, the trajectory may deviate from its expected path.

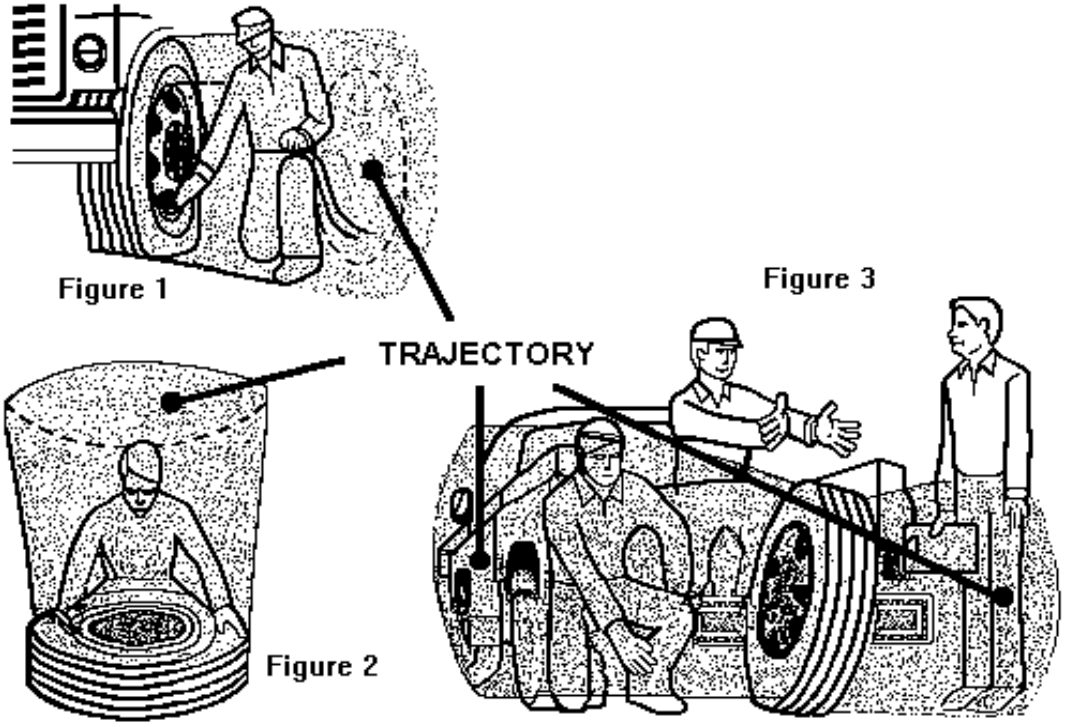

WAC 296-155-61713 (Cont.)

Appendix B-Ordering Information for NHTSA charts.

The NHTSA charts as part of a continuing campaign to alert rim wheel serving personnel of the industry accepted procedures for servicing multipiece rim wheels.

Prints of the charts are available through the Occupational Safety and Health Administration (OSHA) area offices. The address and telephone number of the nearest OSHA area office can be obtained by looking in the local telephone directory under U.S. Government, U.S. Department of Labor, Occupational Safety and Health Administration.

[Statutory Authority: Chapter 49.17 RCW. 94-15-096 (Order 94-07), § 296-155-61713, filed 7/20/94, effective 9/20/94. Statutory Authority: RCW 49.17.040 and 49.17.050. 86-03-074 (Order 86-14), § 296-155-61713, filed 1/21/86.]

WAC 296-155-620 Pile driving equipment.

(1) General requirements.

(a) Boilers and piping systems which are a part of, or used with, pile driving equipment shall meet the applicable requirements of the American Society of Mechanical Engineers, Powers Boilers (section I).

(b) All pressure vessels which are a part of or used with, pile driving equipment shall meet the applicable requirements of the American Society of Mechanical Engineers, Pressure Vessels (section VIII).

(c) Overhead protection, which will not obscure the vision of the operator, and which meets the requirements of Part L of this chapter, shall be provided. Protection shall be of 2-inch planking or other solid material of equivalent strength.

(d) Stop blocks shall be provided for the leads to prevent the hammer from being raised against the head block.

(e) A blocking device, capable of safely supporting the weight of the hammer shall be provided for placement in the leads under the hammer at all times while employees are working under the hammer.

(f) Guards shall be provided across the top of the head block to prevent the cable from jumping out of the sheaves.

(g) When the leads must be inclined in the driving of batter piles, provisions shall be made to stabilize the leads.

(h) All working equipment shall be visually inspected at the beginning of each shift.

(i) Fixed leads shall be provided with ladder, and adequate rings, or similar attachment points, so that the loft workers may engage their full body harness lanyard to the leads. If the leads are provided with loft platform(s) such platform(s) shall be protected by standard guardrails.

(j) Pile drivers with swinging leads shall have a wire rope safety strap on top end.

(k) Spud bars shall be of hard wood with smooth round handle end for safe handling. Iron shod spud bars are prohibited.

WAC296-155-620 (Cont.)

(l) A follower block or driving cap shall be used with a drop hammer on all piling except sheet piling.

(m) Steam hose leading to a steam hammer or jet pipe shall be securely attached to the hammer with an adequate length of at least 1/4-inch diameter chain or cable to prevent whipping in the event the joint at the hammer is broken. Air hammer hoses shall be provided with the same protection as required for steam lines.

(n) Safety chains, or equivalent means, shall be provided for each hose connection to prevent the line from thrashing around in case the coupling becomes disconnected.

(o) Steam line controls shall consist of two shutoff valves, one of which shall be a quick-acting lever type within easy reach of the hammer operator.

(p) Guys, outriggers, thrustouts, or counterbalances shall be provided as necessary to maintain stability of pile driver rigs.

(q) Ladders constructed in compliance with this chapter shall be installed on all pile drivers from the hoist platform to the head block, and in such position that workers using ladders will not come in contact with lines, sheaves, etc.

(r) Drop hammers which have been chipped on the face shall not be used for pile driving.

(s) Groove worn drums or spools shall be replaced or properly repaired to present a smooth working surface.

(t) At least two full wraps of cable shall be maintained on hoisting drums.

(u) Proper racks shall be provided for storage of cross-cut saws.

(v) Every hoisting drum used as a pile driver shall be equipped with manually operated dogs or pawls to hold suspended loads. Foot brakes shall only be used to hold suspended loads until drum dogs are engaged. The dogs shall be visible from the operator's station or be equipped with a positive direct connected telltale which shall be visible to the operator.

(w) No counterweight or spring arrangement on dogs shall be permitted which would allow dog to be automatically disengaged either by relieving the load or rolling the drum.

(x) In every crew there shall be designated signalperson. The driver operator or drum person shall receive signals from no others, except when loftworker is above. The hammer shall not be lowered except on the loftworker's signal.

(y) Spliced hammer lines shall not be used.

(2) Pile driving from barges and floats. Barges or floats supporting pile driving operations shall meet the applicable requirements of WAC 296-155-630.

(3) Pile driving equipment.

(a) Engineers and winchperson shall accept signals only from the designated signalperson.

(b) All employees shall be kept clear when piling is being hoisted into the leads.

WAC 296-155-620 (Cont.)

(c) When piles are being driven in an excavated pit, the walls of the pit shall be sloped to the angle of repose or sheet-piled and braced.

(d) When steel tube piles are being “blown out,” employees shall be kept well beyond the range of falling materials.

(e) When it is necessary to cut off the tops of driven piles, pile driving operations shall be suspended except where the cutting operations are located at least twice the length of the longest pile from the driver.

(f) When driving jacked piles, all access pits shall be provided with ladders and bulkheaded curbs to prevent material from falling into the pit.

(g) Floating equipment such as dredges and pile drivers shall maintain a signal system to shore in the event of an emergency.

(h) The distribution of machinery on floating equipment shall be such that the completed unit floats on an even keel.

(i) Fuel tanks below decks shall be vented to outside of hull and vents shall be equipped with flame arrestors.

(j) All hull compartments shall be ventilated. No person shall work in hull compartments until it is shown the compartments contain no flammable or toxic concentrations.

(k) Light fixtures installed or used within the hull shall be explosion proof.

(l) All floating rigs shall be equipped with ladderways extending from the deck to the waterline where the deck is more than 36 inches above the water. A wire rope shall be hung along both sides of the hull or float and so hung that it shall be at all times near or at the waterline.

(m) Doors of deck houses where deck house sets within 36" of edge of deck and doorways in hull shall be equipped with guard rails or cross chains.

(n) Deck houses shall have a substantial grab rail installed on all sides where such installation will not interfere with operations.

(o) Pile driver and dredge fairlead sheaves, and spudline sheaves shall be guarded to prevent workers or tools being drawn into them.

(p) All work deck shall be kept clear of debris, unnecessary tools and equipment in order to minimize the stumbling hazard. Lines shall be coiled, tools stored and material stacked clear of working spaces.

(q) Night operations shall be adequately lighted for all activity while work is in progress and shall be maintained until workers leave the work area.

(r) Electrical installation and equipment shall be installed and maintained in compliance with the National Electric Code.

WAC 296-155-620 (Cont.)

(s) All walkways over water and on dredge pontoon discharge pipe lines shall be a minimum of 20" in width with standard handrail along one side on structures and gang planks. Walkways on pontoon lines may be equipped with hand lines in lieu of standard handrail.

(t) Adequate fire extinguishing equipment shall be provided and maintained in a serviceable condition.

(u) Protective equipment shall be used when working with creosote timbers. Protective creams shall be used on exposed skin surfaces and gloves and eye protection worn especially when driving piles.

(v) Pulling piles with hammer or pile line rigged through the head block is prohibited unless driver and rigging are designed to safely withstand the imposed strain.

(w) Truck runways and platforms shall be equipped with a wheel guard on all outside edges. Top of wheel guards shall be a minimum of 10 inches above deck.

(x) Use of foot blocks at base of leads for hammer line or pile line is prohibited.

[Statutory Authority: Chapter 49.17 RCW. 94-15-096 (Order 94-07), § 296-155-620, filed 7/20/94, effective 9/20/94; 91-03-044 (Order 90-18), § 296-155-620, filed 1/10/91, effective 2/12/91; Order 76-29, § 296-155-620, filed 9/30/76; Order 74-26, § 296-155-620, filed 5/7/74, effective 6/6/74.]

WAC 296-155-625 Site clearing.

(1) General.

(a) The word **"clearing"** means the removal of trees, stumps, logs, brush, debris and rubbish from the surface of the ground in preparation of a site for construction work of any kind. The removal of trees and logs shall be in accordance with the requirements of chapter 296-54 WAC.

(b) All equipment and tools such as axes, sledges, wedges, saws, springboards, etc., shall be maintained in a safe condition and guarded with standard safeguards.

(c) Fallers shall give warning to brushing crews, buckers and other persons in the vicinity where a tree is being felled; taking notice that such persons are not only out of the reach of tree, but also out of danger of possible sidewinders, snags or other trees which may be knocked over by the tree being felled.

(d) Trees must not be felled toward and within range of a traveled road or operational railroad unless a flagger is used to stop all approaching persons, vehicles, or railroad equipment. Flaggers and flagging activities at the site must comply with the requirements of WAC 296-155-305.

(e) Clearing crews shall not be placed immediately below other crews working on hillsides where there is a possible danger of skidding or rolling trees, moving earth or rock.

(f) Pioneer roads on clearing operations shall be constructed to safely accommodate all equipment moved over road.

(g) Hazardous standing and down timber, rocks, etc., shall be moved from upper sides of cuts on side hill operations.

(h) Care shall be exercised in the use of oil for burning brush or timber.

WAC 296-155-625 (Cont.)

(i) Employees engaged in site clearing shall be protected from hazards of irritant and toxic plants and suitably instructed in the first-aid treatment available.

(j) All equipment used in site clearing operations shall be equipped with rollover guards meeting the requirements of this chapter. In addition, rider-operated equipment shall be equipped with an overhead and rear canopy guard meeting the following requirements:

(i) The overhead covering on this canopy structure shall be of not less than 1/8-inch steel plate or 1/4-inch woven wire mesh with openings no greater than 1 inch, or equivalent.

(ii) The opening in the rear of the canopy structure shall be covered with not less than 1/4-inch woven wire mesh with openings no greater than 1 inch.

(iii) Use of 1/2 inch thick plastic sheets or other thicknesses of plastic panels derived from polycarbonate, acrylic, cellulose acetate butyrate which provides equivalent or better protection against particular hazards involved is acceptable in lieu of 1 or 1 3/4 inch open mesh material.

(A) All panels shall be installed in a manner which can withstand the initial impact, and maintain the protective barrier integrity; and

(B) All panels must be labeled or marked to distinguish between acceptable and inferior materials.

(k) In addition to observance of the general safety and health standards;

(i) The employer shall assume the responsibility of work assignment so that no worker shall be required to work in a position or location so isolated as to not be within ordinary calling distance of another person who can render assistance in case of emergency. In any operation where cutting, felling trees, loading, or a combination of these duties is carried on, there shall be a minimum crew of two persons who shall work as a team and shall be in visual or voice contact with one another. If one worker at these operations is required to be left alone for a period of time, the worker shall be contacted by another person at reasonable intervals not to exceed fifteen minutes unless such practice can be established to be impractical.

(ii) This does not apply to operators of motor vehicles, watchpersons or certain other jobs which, by their nature, are singular worker assignments. However, a definite procedure for checking the welfare of all workers during working hours shall be instituted and all workers so advised.

[Statutory Authority: RCW 49.17.010, .040, .050; Chapter 239, Laws of 2000 (ESHB 2647); and Chapter 34.05 RCW. 01-04-015 (Order 00-03), § 296-155-625, filed 01/26/01, effective 02/28/01. Statutory Authority: Chapter 49.17 RCW. 94-15-096 (Order 94-07), § 296-155-625, filed 7/20/94, effective 9/20/94; 91-03-044 (Order 90-18), § 296-155-625, filed 1/10/91, effective 2/12/91. Statutory Authority: RCW 49.17.040 and 49.17.050. 86-03-074 (Order 86-14), § 296-155-625, filed 1/21/86; Order 74-26, § 296-155-625, filed 5/7/74, effective 6/6/74.]

WAC 296-155-630 Marine operations and equipment.

(1) Material handling operations.

Operations fitting the definition of **"material handling"** shall be performed in conformance with applicable requirements of "Safety and health regulations for longshoring." The term **"longshoring operations"** means the loading, unloading, moving, or handling of construction materials, equipment and

WAC 296-155-630 (Cont.)

supplies, etc. into, in, on, or out of any vessel, from a fixed structure or shore-to-vessel, vessel-to-shore or fixed structure or vessel-to-vessel.

(2) Access to barges.

(a) Ramps for access of vehicles to or between barges shall be of adequate strength, provided with side boards, well maintained, and properly secured.

(b) Unless employees can step safely to or from the wharf, float, barge, or river towboat, either a ramp, meeting the requirements of (a) of this subsection, or a safe walkway, shall be provided.

(c) Jacob's ladders shall be of the double rung or flat tread type. They shall be well maintained and properly secured.

(d) A Jacob's ladder shall either hang without slack from its lashings or be pulled up entirely.

(e) When the upper end of the means of access rests on or is flush with the top of the bulwark, substantial steps, properly secured and equipped with at least one substantial hand rail approximately 33 inches in height, shall be provided between the top of the bulwark and the deck.

(f) Obstructions shall not be laid on or across the gangway.

(g) The means of access shall be adequately illuminated for its full length.

(h) Unless the structure makes it impossible, the means of access shall be so located that the load will not pass over employees.

(3) Working surfaces of barges.

(a) Employees shall not be permitted to walk along the sides of covered lighters or barges with coamings more than 5 feet high, unless there is a 3-foot clear walkway, or a grab rail, or a taut handline is provided.

(b) Decks and other working surfaces shall be maintained in a safe condition.

(c) Employees shall not be permitted to pass fore and aft, over, or around deckloads, unless there is a safe passage.

(d) Employees shall not be permitted to walk over deckloads from rail to coaming unless there is a safe passage. If it is necessary to stand at the outboard or inboard edge of the deckload where less than 24 inches of bulwark, rail, coaming, or other protection exists, all employees shall be provided with a suitable means of protection against falling from the deckload.

(4) First-aid and lifesaving equipment.

(a) Provisions for rendering first aid and medical assistance shall be in accordance with Part B of this Chapter.

(b) The employer shall ensure that there is in the vicinity of each barge in use at least one U.S. Coast Guard-approved 30-inch life ring with not less than 90 feet of line attached, and at least one portable or permanent ladder which will reach the top of the apron to the surface of the water. If

WAC 296-155-630 (Cont.)

the above equipment is not available at the pier, the employer shall furnish it during the time that the employer is working the barge.

(c) Employees walking or working on the unguarded decks of barges shall be protected with U.S. Coast Guard-approved personal flotation devices such as Type I PFD, Type II PFD, Type III PFD, or Type V PFD, or their equivalent, pursuant to 46 CFR 160 (Coast Guard Lifesaving Equipment Specifications) and 33 CFR 175.23 (Coast Guard table of devices equivalent to personal flotation devices). Ski belt or inflatable type personal flotation devices are specifically prohibited.

(5) Diving operations. (Reserved.)

[Statutory Authority: Chapter 49.17 RCW. 94-15-096 (Order 94-07), § 296-155-630, filed 7/20/94, effective 9/20/94; Order 76-29, § 296-155-630, filed 9/30/76; Order 74-26, § 296-155-630, filed 5/7/74, effective 6/6/74.]

PART N
EXCAVATION, TRENCHING, AND SHORING

WAC 296-155-650 Scope, application, and definitions applicable to this part.

(1) Scope and application. This part applies to all open excavations made in the earth's surface. Excavations are defined to include trenches.

(2) Definitions applicable to this part.

(a) **"Accepted engineering requirements or practices."** Those requirements which are compatible with standards of practice required by a registered professional engineer.

(b) **"Aluminum hydraulic shoring."** A preengineered shoring system comprised of aluminum hydraulic cylinders (crossbraces) used in conjunction with vertical rails (uprights) or horizontal rails (walers). Such system is designed, specifically to support the sidewalls of an excavation and prevent cave-ins.

(c) **"Bell-bottom pier hole."** A type of shaft or footing excavation, the bottom of which is made larger than the cross section above to form a belled shape.

(d) **"Benching (benching system)."** A method of protecting employees from cave-ins by excavating the sides of an excavation to form one or a series of horizontal levels or steps, usually with vertical or near-vertical surfaces between levels.

(e) **"Cave-in."** The separation of a mass of soil or rock material from the side of an excavation, or loss of soil from under a trench shield or support system, and its sudden movement into the excavation in quantity that it could entrap, bury, injure, or immobilize a person.

(f) **"Competent person."** One who can identify existing or predictable hazards in the surroundings that are unsanitary, hazardous, or dangerous to employees. Also has authorization or authority by the nature of their position to take prompt corrective measures to eliminate them. The person shall be knowledgeable in the requirements of this part.

(g) **"Cross braces."** The horizontal members of a shoring system installed perpendicular to the sides of the excavation, the ends of which bear against either uprights or wales.

(h) **"Excavation."** Any person-made cut, cavity, trench, or depression in the earth's surface, formed by earth removal.

(i) **"Faces or sides."** The vertical or inclined earth surfaces formed as a result of excavation work.

(j) **"Failure."** The breakage, displacement, or permanent deformation of a structural member or connection so as to reduce its structural integrity and its supportive capabilities.

(k) **"Hazardous atmosphere."** A atmosphere which by reason of being explosive, flammable, poisonous, corrosive, oxidizing, irritating, oxygen deficient, toxic, or otherwise harmful, may cause death, illness, or injury.

(l) **"Kickouts."** Accidental release or failure of a cross brace.

WAC 296-155-650 (Cont.)

(m) **"Protective system."** A method of protecting employees from cave-ins, from material that could fall or roll from an excavation face or into an excavation, or from the collapse of adjacent structures. Protective systems include support systems, sloping and benching systems, shield systems, and other systems that provide the necessary protection.

(n) **"Ramp."** An inclined walking or working surface that is used to gain access to one point to another, and is constructed from earth or from structural materials such as steel or wood.

(o) **"Registered professional engineer."** A person who is registered as a professional engineer in the state of Washington. The registered professional engineer shall comply with the Washington state department of licensing requirements, chapter 18.43 RCW.

(p) **"Sheeting."** The members of a shoring system that retain the earth in position and in turn are supported by other members of the shoring system.

(q) **"Shield (shield system)."** A structure that is able to withstand the forces imposed on it by a cave-in and thereby protect employees within the structure. Shields can be permanent structures or can be designed to be portable and moved along as work progresses. Additionally, shields can be either premanufactured or job-built in accordance with WAC 296-155-657 (3)(c) or (d). Shields used in trenches are usually referred to as "trench boxes" or "trench shields."

(r) **"Shoring (shoring system)."** A structure such as a metal hydraulic, mechanical, or timber shoring system that supports the sides of an excavation and which is designed to prevent cave-ins.

(s) **"Sides."** See "faces."

(t) **"Sloping (sloping system)."** A method of protecting employees from cave-ins by excavating to form sides of an excavation that are inclined away from the excavation so as to prevent cave-ins. The angle of incline required to prevent a cave-in varies with differences in such factors as the soil type, environmental conditions of exposure, and application of surcharge loads.

(u) **"Stable rock."** A natural solid mineral material that can be excavated with vertical sides and will remain intact while exposed. Unstable rock is considered to be stable when the rock material on the side or sides of the excavation is secured against caving-in or movement by rock bolts or by another protective system that has been designed by a registered professional engineer.

(v) **"Structural ramp."** A ramp built of steel or wood, usually used for vehicle access. Ramps made of soil or rock are not considered structural ramps.

(w) **"Support system."** A structure such as underpinning, bracing or shoring, which provides support to an adjacent structure, underground installation, or the sides of an excavation.

(x) **"Tabulated data."** Tables and charts approved by a registered professional engineer and used to design and construct a protective system.

(y) **"Trench (trench excavation)."** A narrow excavation in relation to its length made below the surface of the ground. In general, the depth is greater than the width, but the width of a trench (measured at the bottom) is not greater than 15 feet (4.6m). If forms or other structures are installed or constructed in an excavation so as to reduce the dimension measured from the forms or structure to the side of the excavation to 15 feet (4.6 m) or less (measured at the bottom of the excavation), the excavation is also considered to be a trench.

WAC 296-155-650 (Cont.)

(z) **"Trench box."** See "shield."

(aa) **"Trench shield."** See "shield."

(bb) **"Uprights."** The vertical members of a trench shoring system placed in contact with the earth and usually positioned so that individual members do not contact each other. Uprights placed so that individual members are closely spaced, in contact with or interconnected to each other, are often called "sheeting."

(cc) **"Wales."** Horizontal members of a shoring system placed parallel to the excavation face whose sides bear against the vertical members of the shoring system or earth.

[Statutory Authority: Chapter 49.17 RCW. 94-15-096 (Order 94-07), § 296-155-650, filed 7/20/94, effective 9/20/94. Statutory Authority: Chapter 49.17 RCW and RCW 49.17.040, [49.17].050 and [49.17].060. 92-22-067 (Order 92-06), § 296-155-650, filed 10/30/92, effective 12/8/92. Statutory Authority: Chapter 49.17 RCW. 91-03-044 (Order 90-18), § 296-155-650, filed 1/10/91, effective 2/12/91. Statutory Authority: RCW 49.17.040 and 49.17.050. 86-03-074 (Order 86-14), § 296-155-650, filed 1/21/86. Statutory Authority: RCW 49.17.040, 49.17.050 and 49.17.240. 81-13-053 (Order 81-9), § 296-155-650, filed 6/17/81; Order 74-26, § 296-155-650, filed 5/7/74, effective 6/6/74.]

WAC 296-155-655 General protection requirements.

(1) Surface encumbrances. All surface encumbrances that are located so as to create a hazard to employees shall be removed or supported, as necessary, to safeguard employees.

(2) Underground installations.

(a) The location of utility installations, such as sewer, telephone, fuel, electric, water lines, or any other underground installations that reasonably may be expected to be encountered during excavation work, shall be located prior to opening an excavation.

(b) Utility companies or owners shall be contacted within established or customary local response times, advised of the proposed work, and asked to locate the underground utility installation prior to the start of actual excavation.

(c) When excavation operations approach the location of underground installations, the exact location of the installations shall be determined by safe and acceptable means.

(d) While the excavation is open, underground installations shall be protected, supported, or removed as necessary to safeguard employees.

(3) Access and egress.

(a) Structural ramps.

(i) Structural ramps that are used solely by employees as a means of access or egress from excavations shall be designed by a competent person. Structural ramps used for access or egress of equipment shall be designed by a competent person qualified in structural design, and shall be constructed in accordance with the design.

(ii) Ramps and runways constructed of two or more structural members shall have the structural members connected together to prevent displacement.

WAC 296-155-655 (Cont.)

(iii) Structural members used for ramps and runways shall be of uniform thickness.

(iv) Cleats or other appropriate means used to connect runway structural members shall be attached to the bottom of the runway or shall be attached in a manner to prevent tripping.

(v) Structural ramps used in lieu of steps shall be provided with cleats or other surface treatments on the top surface to prevent slipping.

(b) Means of egress from trench excavations. A stairway, ladder, ramp or other safe means of egress shall be located in trench excavations that are 4 feet (1.22 m) or more in depth so as to require no more than 25 feet (7.62 m) of lateral travel for employees.

(4) Exposure to vehicular traffic. Employees exposed to public vehicular traffic shall be provided with, and shall wear, warning vests or other suitable garments marked with or made of reflectorized or high-visibility material.

(5) Exposure to falling loads. No employee shall be permitted underneath loads handled by lifting or digging equipment. Employees shall be required to stand away from any vehicle being loaded or unloaded to avoid being struck by any spillage or falling materials. Operators may remain in the cabs of vehicles being loaded or unloaded when the vehicles are equipped, in accordance with WAC 296-155-610 (2)(g), to provide adequate protection for the operator during loading and unloading operations.

(6) Warning system for mobile equipment. When mobile equipment is operated adjacent to an excavation, or when such equipment is required to approach the edge of an excavation, and the operator does not have a clear and direct view of the edge of the excavation, a warning system shall be utilized such as barricades, hand or mechanical signals, or stop logs. If possible, the grade should be away from the excavation.

(7) Hazardous atmospheres.

(a) Testing and controls. In addition to the requirements set forth in parts B-1, C, and C-1 of this chapter (296-155 WAC) to prevent exposure to harmful levels of atmospheric contaminants and to assure acceptable atmospheric conditions, the following requirements shall apply:

(i) Where oxygen deficiency (atmospheres containing less than 19.5 percent oxygen) or a hazardous atmosphere exists or could reasonably be expected to exist, such as in excavations in landfill areas or excavations in areas where hazardous substances are stored nearby, the atmospheres in the excavation shall be tested before employees enter excavations greater than 4 feet (1.22 m) in depth.

(ii) Adequate precautions shall be taken to prevent employee exposure to atmospheres containing less than 19.5 percent oxygen and other hazardous atmospheres. These precautions include providing proper respiratory protection or ventilation as required by chapter 296-62 WAC, Part E and by Part B-1 of this chapter.

(iii) Adequate precaution shall be taken such as providing ventilation, to prevent employee exposure to an atmosphere containing a concentration of a flammable gas in excess of 10 percent of the lower flammable limit of the gas.

(iv) When controls are used that are intended to reduce the level of atmospheric contaminants to acceptable levels, testing shall be conducted as often as necessary to ensure that the atmosphere remains safe.

WAC 296-155-655 (Cont.)

(b) Emergency rescue equipment.

(i) Emergency rescue equipment, such as breathing apparatus, a safety harness and line, or a basket stretcher, shall be readily available where hazardous atmospheric conditions exist or may reasonably be expected to develop during work in an excavation. This equipment shall be attended when in use.

(ii) Employees entering bell-bottom pier holes, or other similar deep and confined footing excavations, shall wear a harness with a lifeline securely attached to it. The lifeline shall be separate from any line used to handle materials, and shall be individually attended at all times while the employee wearing the lifeline is in the excavation.

Note: See chapter 296-62 WAC, Part M for additional requirements applicable to confined space operations.

(8) Protection from hazards associated with water accumulation.

(a) Employees shall not work in excavations in which there is accumulated water, or in excavations in which water is accumulating, unless adequate precautions have been taken to protect employees against the hazards posed by water accumulation. The precautions necessary to protect employees adequately vary with each situation, but could include special support or shield systems to protect from cave-ins, water removal to control the level of accumulating water, or use of a safety harness and lifeline.

(b) If water is controlled or prevented from accumulating by the use of water removal equipment, the water removal equipment and operations shall be monitored by a competent person to ensure proper operation.

(c) If excavation work interrupts the natural drainage of surface water (such as streams), diversion ditches, dikes, or other suitable means shall be used to prevent surface water from entering the excavation and to provide adequate drainage of the area adjacent to the excavation. Excavations subject to runoff from heavy rains will require an inspection by a competent person and compliance with subdivisions (a) and (b) of this subsection.

(9) Stability of adjacent structures.

(a) Where the stability of adjoining buildings, walls, or other structures is endangered by excavation operations, support systems such as shoring, bracing, or underpinning shall be provided to ensure the stability of such structures for the protection of employees.

(b) Excavation below the level of the base or footing of any foundation or retaining wall that could be reasonably expected to pose a hazard to employees shall not be permitted except when:

(i) A support system, such as underpinning, is provided to ensure the safety of employees and the stability of the structure; or

(ii) The excavation is in stable rock; or

(iii) A registered professional engineer has approved the determination that the structure is sufficiently removed from the excavation so as to be unaffected by the excavation activity; or

WAC 296-155-655 (Cont.)

(iv) A registered professional engineer has approved the determination that such excavation work will not pose a hazard to employees.

(c) Sidewalks, pavements, and appurtenant structure shall not be undermined unless a support system or another method of protection is provided to protect employees from the possible collapse of such structures.

(10) Protection of employees from loose rock or soil.

(a) Adequate protection shall be provided to protect employees from loose rock or soil that could pose a hazard by falling or rolling from an excavation face. Such protection shall consist of scaling to remove loose material; installation of protective barricades at intervals as necessary on the face to stop and contain falling material; or other means that provide equivalent protection.

(b) Employees shall be protected from excavated or other materials or equipment that could pose a hazard by falling or rolling into excavations. Protection shall be provided by placing and keeping such materials or equipment at least 2 feet (.61 m) from the edge of excavations, or by the use of retaining devices that are sufficient to prevent materials or equipment from falling or rolling into excavations, or by a combination of both if necessary.

(11) Inspections.

(a) Daily inspections of excavations, the adjacent areas, and protective systems shall be made by a competent person for evidence of a situation that could result in possible cave-ins, indications of failure of protective systems, hazardous atmospheres, or other hazardous conditions. An inspection shall be conducted by the competent person prior to the start of work and as needed throughout the shift. Inspections shall also be made after every rainstorm or other hazard increasing occurrence. These inspections are only required when employee exposure can be reasonably anticipated.

(b) Where the competent person finds evidence of a situation that could result in a possible cave-in, indications of failure of protective systems, hazardous atmospheres, or other hazardous conditions, exposed employees shall be removed from the hazardous area until the necessary precautions have been taken to ensure their safety.

(12) Fall protection.

(a) Walkways shall be provided where employees or equipment are required or permitted to cross over excavations. Guardrails which comply with chapter 296-155 WAC, Part K shall be provided where walkways are 4 feet or more above lower levels.

(b) Adequate barrier physical protection shall be provided at all remotely located excavations. All wells, pits, shafts, etc., shall be barricaded or covered. Upon completion of exploration and similar operations, temporary wells, pits, shafts, etc., shall be backfilled.

[Statutory Authority: RCW 49.17.010, .040, .050. 99-17-094 (Order 99-01), § 296-155-655, filed 08/17/99, effective 12/1/99. Statutory Authority: RCW 49.17.010, .040, .050. 99-10 (Order 98-10), § 296-155-655, filed 05/04/99, effective 09/01/99. Statutory Authority: Chapter 49.17 RCW. 96-24-051, (Order 96-05), §296-155-655, filed 11/27/96, effective 02/01/97. 95-10-016, § 296-155-655, filed 4/25/95, effective 10/1/95. Statutory Authority: Chapter 49.17 RCW and RCW 49.17.040, [49.17].050 and [49.17].060. 92-22-067 (Order 92-06), § 296-155-655, filed 10/30/92, effective 12/8/92. Statutory Authority: Chapter 49.17 RCW. 91-03-044 (Order 90-18), § 296-155-655, filed 1/10/91, effective 2/12/91. Statutory Authority: RCW 49.17.040 and 49.17.050. 86-03-074 (Order 86-14), § 296-155-655, filed 1/21/86. Statutory Authority: RCW 49.17.040, 49.17.050 and 49.17.240. 81-13-053 (Order 81-9), § 296-155-655, filed 6/17/81; Order 76-29, § 296-155-655, filed 9/30/76; Order 74-26, § 296-155-655, filed 5/7/74, effective 6/6/74.]

WAC 296-155-657 Requirements for protective systems.

(1) Protection of employees in excavations.

(a) Each employee in an excavation shall be protected from cave-ins by an adequate protective system designed in accordance with subsections (2) or (3) of this section except when:

(i) Excavations are made entirely in stable rock; or

(ii) Excavations are less than 4 feet (1.22m) in depth and examination of the ground by a competent person provides no indication of a potential cave-in.

(b) Protective systems shall have the capacity to resist without failure all loads that are intended or could reasonably be expected to be applied or transmitted to the system.

(2) Design of sloping and benching systems. The slopes and configurations of sloping and benching systems shall be selected and constructed by the employer or employer's designee and shall be in accordance with the requirements of subdivision (a); or, in the alternative, subdivision (b); or, in the alternative, subdivision (c); or, in the alternative, subdivision (d), as follows:

(a) Option 1-Allowable configurations and slopes.

(i) Excavations shall be sloped at an angle not steeper than one and one-half horizontal to one vertical (34 degrees measured from the horizontal), unless the employer uses one of the other options listed below.

(ii) Slopes specified in item (i) of this subdivision, shall be excavated to form configurations that are in accordance with the slopes shown for Type C soil in Appendix B to this part.

(b) Option 2-Determination of slopes and configurations using Appendices A and B. Maximum allowable slopes, and allowable configurations for sloping and benching systems, shall be determined in accordance with the conditions and requirements set forth in appendices A and B to this part.

(c) Option 3-Designs using other tabulated data.

(i) Designs of sloping or benching systems shall be selected from and be in accordance with tabulated data, such as tables and charts.

(ii) The tabulated data shall be in written form and shall include all of the following:

(A) Identification of the parameters that affect the selection of a sloping or benching system drawn from such data;

(B) Identification of the limits of use of the data, to include the magnitude and configuration of slopes determined to be safe;

(C) Explanatory information as may be necessary to aid the user in making a correct selection of a protective system from the data.

WAC 296-155-657 (Cont.)

(iii) At least one copy of the tabulated data which identifies the registered professional engineer who approved the data, shall be maintained at the jobsite during construction of the protective system. After that time the data may be stored off the jobsite, but a copy of the data shall be made available to the director upon request.

(d) Option 4-Design by a registered professional engineer.

(i) Sloping and benching systems not utilizing Option 1 or Option 2 or Option 3 under subsection (2) of this section shall be approved by a registered professional engineer.

(ii) Designs shall be in written form and shall include at least the following:

(A) The magnitude of the slopes that were determined to be safe for the particular project;

(B) The configurations that were determined to be safe for the particular project; and

(C) The identity of the registered professional engineer approving the design.

(iii) At least one copy of the design shall be maintained at the jobsite while the slope is being constructed. After that time the design need not be at the jobsite, but a copy shall be made available to the director upon request.

(3) Design of support systems, shield systems, and other protective systems. Designs of support systems, shield systems, and other protective systems shall be selected and constructed by the employer or employer's designee and shall be in accordance with the requirements of subdivision (a); or, in the alternative, subdivision (b); or, in the alternative, subdivision (c); or, in the alternative, subdivision (d) as follows:

(a) Option 1-Designs using appendices A, C, and D. Designs for timber shoring in trenches shall be determined in accordance with the conditions and requirements set forth in appendices A and C to this part. Designs for aluminum hydraulic shoring shall be in accordance with subdivision (b) of this subsection, but if manufacturer's tabulated data cannot be utilized, designs shall be in accordance with appendix D.

(b) Option 2-Designs using manufacturer's tabulated data.

(i) Design of support systems, shield systems, or other protective systems that are drawn from manufacturer's tabulated data shall be in accordance with all specifications, recommendations, and limitations issued or made by the manufacturer.

(ii) Deviation from the specifications, recommendations, and limitations issued or made by the manufacturer shall only be allowed after the manufacturer issues specific written approval.

(iii) Manufacturer's specifications, recommendations, and limitations, and manufacturer's approval to deviate from the specifications, recommendations, and limitations shall be in written form at the jobsite during construction of the protective system. After that time this data may be stored off the jobsite, but a copy shall be made available to the director upon request.

WAC 296-155-657 (Cont.)

(c) Option 3-Designs using other tabulated data.

(i) Designs of support systems, shield systems, or other protective systems shall be selected from and be in accordance with tabulated data, such as tables and charts.

(ii) The tabulated data shall be in written form and include all of the following:

(A) Identification of the parameters that affect the selection of a protective system drawn from such data;

(B) Identification of the limits of use of the data;

(C) Explanatory information as may be necessary to aid the user in making a correct selection of a protective system from the data.

(iii) At least one copy of the tabulated data, which identifies the registered professional engineer who approved the data, shall be maintained at the jobsite during construction of the protective system. After that time the data may be stored off the jobsite, but a copy of the data shall be made available to the director upon request.

(d) Option 4-Design by a registered professional engineer.

(i) Support systems, shield systems, and other protective systems not utilizing Option 1, Option 2 or Option 3, above, shall be approved by a registered professional engineer.

(ii) Designs shall be in written form and shall include the following:

(A) A plan indicating the sizes, types, and configurations of the materials to be used in the protective system; and

(B) The identity of the registered professional engineer approving the design.

(iii) At least one copy of the design shall be maintained at the jobsite during construction of the protective system. After that time, the design may be stored off the jobsite, but a copy of the design shall be made available to the director upon request.

(4) Materials and equipment.

(a) Materials and equipment used for protective systems shall be free from damage or defects that might impair their proper function.

(b) Manufactured materials and equipment used for protective systems shall be used and maintained in a manner that is consistent with the recommendations of the manufacturer, and in a manner that will prevent employee exposure to hazards.

(c) When material or equipment that is used for protective systems is damaged, a competent person shall examine the material or equipment and evaluate its suitability for continued use. If the competent person cannot assure the material or equipment is able to support the intended loads or is otherwise suitable for safe use, then such material or equipment shall be removed from service, and shall be evaluated and approved by a registered professional engineer before being returned to service.

WAC 296-155-657 (Cont.)

(5) Installation and removal of support.

(a) General.

(i) Members of support systems shall be securely connected together to prevent sliding, falling, kickouts, or other predictable failure.

(ii) Support systems shall be installed and removed in a manner that protects employees from cave-ins, structural collapses, or from being struck by members of the support system.

(iii) Individual members of support systems shall not be subjected to loads exceeding those which those members were designed to withstand.

(iv) Before temporary removal of individual members begins, additional precautions shall be taken to ensure the safety of employees, such as installing other structural members to carry the loads imposed on the support system.

(v) Removal shall begin at, and progress from, the bottom of the excavation. Members shall be released slowly so as to note any indication of possible failure of the remaining members of the structure or possible cave-in of the sides of the excavation.

(vi) Backfilling shall progress together with the removal of support systems from excavations.

(b) Additional requirements for support systems for trench excavations.

(i) Excavation of material to a level no greater than 2 feet (.61 m) below the bottom of the members of a support system shall be permitted, but only if the system is designed to resist the forces calculated for the full depth of the trench, and there are no indications while the trench is open of a possible loss of soil from behind or below the bottom of the support system.

(ii) Installation of a support system shall be closely coordinated with the excavation of trenches.

(6) Sloping and benching systems. Employees shall not be permitted to work on the faces of sloped or benched excavations at levels above other employees except when employees at the lower levels are adequately protected from the hazard of falling, rolling, or sliding material or equipment.

(7) Shield systems.

(a) General.

(i) Shield systems shall not be subjected to loads exceeding those which the system was designed to withstand.

(ii) Shields shall be installed in a manner to restrict lateral or other hazardous movement of the shield in the event of the application of sudden lateral loads.

(iii) Employees shall be protected from the hazard of cave-ins when entering or exiting the areas protected by shields.

WAC 296-155-657 (Cont.)

(iv) Employees shall not be allowed in shields when shields are being installed, removed, or moved vertically.

(b) Additional requirement for shield systems used in trench excavations. Excavations of earth material to a level not greater than 2 feet (.61 m) below the bottom of a shield shall be permitted, but only if the shield is designed to resist the forces calculated for the full depth of the trench, and there are no indications while the trench is open of a possible loss of soil from behind or below the bottom of the shield.

[Statutory Authority: Chapter 49.17 RCW and RCW 49.17.040, [49.17].050 and [49.17].060. 92-22-067 (Order 92-06), § 296-155-657, filed 10/30/92, effective 12/8/92. Statutory Authority: Chapter 49.17 RCW. 91-03-044 (Order 90-18), § 296-155-657, filed 1/10/91, effective 2/12/91.]

WAC 296-155-66103 Reserved.

[Statutory Authority: Chapter 49.17 RCW and RCW 49.17.040, [49.17].050 and [49.17].060. 92-22-067 (Order 92-06), § 296-155-66103, filed 10/30/92, effective 12/8/92. Statutory Authority: Chapter 49.17 RCW. 91-03-044 (Order 90-18), § 296-155-66103, filed 1/10/91, effective 2/12/91.]

WAC 296-155-66105 Reserved.

[Statutory Authority: Chapter 49.17 RCW and RCW 49.17.040, [49.17].050 and [49.17].060. 92-22-067 (Order 92-06), § 296-155-66105, filed 10/30/92, effective 12/8/92. Statutory Authority: Chapter 49.17 RCW. 91-03-044 (Order 90-18), § 296-155-66105, filed 1/10/91, effective 2/12/91.]

WAC 296-155-66109 Reserved.

[Statutory Authority: Chapter 49.17 RCW and RCW 49.17.040, [49.17].050 and [49.17].060. 92-22-067 (Order 92-06), § 296-155-66109, filed 10/30/92, effective 12/8/92. Statutory Authority: Chapter 49.17 RCW. 91-03-044 (Order 90-18), § 296-155-66109, filed 1/10/91, effective 2/12/91.]

WAC 296-155-664 Appendices.

[Statutory Authority: Chapter 49.17 RCW and RCW 49.17.040, [49.17].050 and [49.17].060. 92-22-067 (Order 92-06), § 296-155-664, filed 10/30/92, effective 12/8/92. Statutory Authority: Chapter 49.17 RCW. 91-03-044 (Order 90-18), § 296-155-664, filed 1/10/91, effective 2/12/91.]

WAC 296-155-66401 Appendix A-Soil classification.

(1) Scope and application.

(a) Scope. This appendix describes a method of classifying soil and rock deposits based on site and environmental conditions, and on the structure and composition of the earth deposits. The appendix contains definitions, sets forth requirements, and describes acceptable visual and manual tests for use in classifying soils.

(b) Application. This appendix applies when a sloping or benching system is designed in accordance with the requirements set forth in WAC 296-155-657 (2)(b) as a method of protection for employees from cave-ins. This appendix also applies when timber shoring for excavations is designed as a method of protection from cave-ins in accordance with appendix C to part N of this chapter, and when aluminum hydraulic shoring is designed in accordance with appendix D. This Appendix also applies if other protective systems are designed and selected for use from data prepared in accordance with the requirements set forth in WAC 296-155-657(3), and the use of the data is predicated on the use of the soil classification system set forth in this appendix.

(2) Definitions. The definitions and examples given below are based on, in whole or in part, the following; American Society for Testing Materials (ASTM) Standards D653-85 and D2488; The Unified Soils Classification System, The U.S. Department of Agriculture (USDA) Textural Classification Scheme; and The National Bureau of Standards Report BSS-121.

WAC 296-155-66401 (Cont.)

(a) Cemented soil. A soil in which the particles are held together by a chemical agent, such as calcium carbonate such that a hand-size sample cannot be crushed into powder or individual soil particles by finger pressure.

(b) Cohesive soil. Clay (fine grained soil), or soil with a high clay content, which has cohesive strength. Cohesive soil does not crumble, can be excavated with vertical sideslopes, and is plastic when moist. Cohesive soil is hard to break up when dry, and exhibits significant cohesion when submerged. Cohesive soils include clayey silt, sandy clay, silty clay, clay and organic clay.

(c) Dry soil. Soil that does not exhibit visible signs of moisture content.

(d) Fissured. A soil material that has a tendency to break along definite planes of fracture with little resistance, or a material that exhibits open cracks, such as tension cracks, in an exposed surface.

(e) Granular soil. Gravel, sand, or silt, (coarse grained soil) with little or no clay content. Granular soil has no cohesive strength. Some moist granular soils exhibit apparent cohesion. Granular soil cannot be molded when moist and crumbles easily when dry.

(f) Layered system. Two or more distinctly different soil or rock types arranged in layers. Micaceous seams or weakened planes in rock or shale are considered layered.

(g) Moist soil. A condition in which a soil looks and feels damp. Moist cohesive soil can easily be shaped into a ball and rolled into small diameter threads before crumbling. Moist granular soil that contains some cohesive material will exhibit signs of cohesion between particles.

(h) Plastic. A property of a soil which allows the soil to be deformed or molded without cracking, or appreciable volume change.

(i) Saturated soil. A soil in which the voids are filled with water. Saturation does not require flow. Saturation, or near saturation, is necessary for the proper use of instruments such as a pocket penetrometer or sheer vane.

(j) Soil classification system. For the purpose of this part, a method of categorizing soil and rock deposits in a hierarchy of Stable Rock, Type A, Type B, and Type C, in decreasing order of stability. The categories are determined based on an analysis of the properties and performance characteristics of the deposits and the environmental conditions of exposure.

(k) Stable rock. Natural solid mineral matter that can be excavated with vertical sides and remain intact while exposed.

(l) Submerged soil. Soil which is underwater or is free seeping.

(m) Type A. Cohesive soils with an unconfined compressive strength of 1.5 ton per square foot (tsf) (144 kPa) or greater. Examples of cohesive soils are: Clay, silty clay, sandy clay, clay loam and, in some cases, silty clay loam and sandy clay loam. Cemented soils such as caliche and hardpan are also considered Type A. No soil is Type A if:

(i) The soil is fissured; or

(ii) The soil is subject to vibration from heavy traffic, pile driving, or similar effects; or

WAC 296-155-66401 (Cont.)

(iii) The soil has been previously disturbed; or

(iv) The soil is part of a sloped, layered system where the layers dip into the excavation on a slope of 4 horizontal to 1 vertical (4H.1V) or greater; or

(v) The material is subject to other factors that would require it to be classified as a less stable material.

(n) Type B.

(i) Cohesive soil with an unconfined compressive strength greater than 0.5 tsf

(48 kPa) but less than 1.5 tsf (144 kPa): or

(ii) Granular cohesionless soils including: Angular gravel (similar to crushed rock), silt, silt loam, sandy loam and, in some cases, silty clay loam and sandy clay loam.

(iii) Previously disturbed soils except those which would otherwise be classed as Type C soil.

(iv) Soil that meets the unconfined compressive strength or cementation requirements for Type A, but is fissured or subject to vibration: or

(v) Dry rock that is not stable: or

(vi) Material that is part of a sloped, layered system where the layers dip into the excavation on a slope less steep than 4 horizontal to 1 vertical (4H.1V), but only if the material would otherwise be classified as Type B.

(o) Type C.

(i) Cohesive soil with an unconfined compressive strength of 0.5 tsf (48 kPa) or less: or

(ii) Granular soils including gravel, sand, and loamy sand: or

(iii) Submerged soil or soil from which water is freely seeping: or

(iv) Submerged rock that is not stable, or

(v) Material in a sloped, layered system where the layers dip into the excavation or a slope of 4 horizontal to 1 vertical (4H.1V) or steeper.

(p) Unconfined compressive strength. The load per unit area at which a soil will fail in compression. It can be determined by laboratory testing, or estimated in the field using a pocket penetrometer, by thumb penetration tests, and other methods.

(q) Wet soil. Soil that contains significantly more moisture than moist soil, but in such a range of values that cohesive material will slump or begin to flow when vibrated. Granular material that would exhibit cohesive properties when moist will lose those cohesive properties when wet.

WAC 296-155-66401 (Cont.)

(3) Requirements.

(a) Classification of soil and rock deposits. Each soil and rock deposit shall be classified by a competent person as Stable Rock, Type A, Type B, or Type C in accordance with the definitions set forth in subsection (2) of this section.

(b) Basis of classification. The classification of the deposits shall be made based on the results of at least one visual and at least one manual analysis. Such analyses shall be conducted by a competent person using tests in subsection (4) of this section or in other recognized methods of soil classification and testing such as those adopted by the American Society for Testing Materials, or the U.S. Department of Agriculture textural classification system.

(c) Visual and manual analyses. The visual and manual analyses, such as those noted as being acceptable in subsection (4) of this section, shall be designed and conducted to provide sufficient quantitative and qualitative information as may be necessary to identify properly the properties, factors, and conditions affecting the classification of the deposits.

(d) Layered systems. In a layered system, the system shall be classified in accordance with its weakest layer. However, each layer may be classified individually where a more stable layer lies under a less stable layer.

(e) Reclassification. If, after classifying a deposit, the properties, factors, or conditions affecting its classification change in any way, the changes shall be evaluated by a competent person. The deposit shall be reclassified as necessary to reflect the changed circumstances.

(4) Acceptable visual and manual tests.

(a) Visual tests. Visual analysis is conducted to determine qualitative information regarding the excavation site in general, the soil adjacent to the excavation, the soil forming the sides of the open excavation, and the soil taken as samples from excavated material.

(i) Observe samples of soil that are excavated and soil in the sides of the excavation. Estimate the range of particle sizes and the relative amounts of the particle sizes. Soil that is primarily composed of fine-grained material is cohesive material. Soil composed primarily of coarse-grained sand or gravel is granular material.

(ii) Observe soil as it is excavated. Soil that remains in clumps when excavated is cohesive. Soil that breaks up easily and does not stay in clumps is granular.

(iii) Observe the side of the opened excavation and the surface area adjacent to the excavation. Crack-like openings such as tension cracks could indicate fissured material. If chunks of soil spall off a vertical side, the soil could be fissured. Small spalls are evidence of moving ground and are indications of potentially hazardous situations.

(iv) Observe the area adjacent to the excavation and the excavation itself for evidence of existing utility and other underground structures, and to identify previously disturbed soil.

(v) Observe the opened side of the excavation to identify layered systems. Examine layered systems to identify if the layers slope toward the excavation. Estimate the degree of slope of the layers.

WAC 296-155-66401 (Cont.)

(vi) Observe the area adjacent to the excavation and sides of the open excavation for evidence of surface water, water seeping from the sides of the excavation, or the location of the level of the water table.

(vii) Observe the area adjacent to the excavation and the area within the excavation for sources of vibration that may affect the stability of the excavation face.

(b) Manual tests. Manual analysis of soil samples is conducted to determine quantitative as well as qualitative properties of soil and to provide more information in order to classify soil properly.

(i) Plasticity. Mold a moist or wet sample of soil into a ball and attempt to roll it into threads as thin as 1/8-inch in diameter. Cohesive material can be successfully rolled into threads without crumbling. For example, if at least a 2 inch (50 mm) length of 1/8-inch thread can be held on one end without tearing, the soil is cohesive.

(ii) Dry strength. If the soil is dry and crumbles on its own or with moderate pressure into individual grains or fine powder, it is granular (any combination of gravel, sand, or silt). If the soil is dry and falls into clumps which break up into smaller clumps, but the smaller clumps can only be broken up with difficulty, it may be clay in any combination with gravel, sand or silt. If the dry soil breaks into clumps which do not break up into small clumps and which can only be broken with difficulty, and there is no visual indication the soil is fissured, the soil may be considered unfissured.

(iii) Thumb penetration. The thumb penetration test can be used to estimate the unconfined compressive strength of cohesive soils. (This test is based on the thumb penetration test described in American Society for Testing and Materials (ASTM) Standard designation D2488-"Standard Recommended Practice for Description of Soils (Visual-Manual Procedure).") Type A soils with an unconfined compressive strength of 1.5 tsf can be readily indented by the thumb; however, they can be and penetrated by the thumb only with very great effort. Type C soils with an unconfined compressive strength of 0.5 tsf can be easily penetrated several inches by the thumb, and can be molded by light finger pressure. This test should be conducted on an undisturbed soil sample, such as a large clump of spoil, as soon as practicable after excavation to keep to a minimum the effects of exposure to drying influences. If the excavation is later exposed to wetting influences (rain, flooding), the classification of the soil must be changed accordingly.

(iv) Other strength tests. Estimates of unconfined compressive strength of soils can also be obtained by use of a pocket penetrometer or by using a hand-operated shear vane.

(v) Drying test. The basic purpose of the drying test is to differentiate between cohesive material with fissures, unfissured cohesive material, and granular material. The procedure for the drying test involves drying a sample of soil that is approximately 1 inch thick (2.54 cm) and 6 inches (15.24 cm) in diameter until it is thoroughly dry:

(A) If the sample develops cracks as it dries, significant fissures are indicated.

(B) Samples that dry without cracking are to be broken by hand. If considerable force is necessary to break a sample, the soil has significant cohesive material content. The soil can be classified as a unfissured cohesive material and the unconfined compressive strength should be determined.

WAC 296-155-66401 (Cont.)

(C) If a sample breaks easily by hand, it is either a fissured cohesive material or a granular material. To distinguish between the two, pulverize the dried clumps of the sample by hand or by stepping on them. If the clumps do not pulverize easily, the material is cohesive with fissures. If they pulverize easily into very small fragments, the material is granular.

[Statutory Authority: Chapter 49.17 RCW and RCW 49.17.040, [49.17].050 and [49.17].060. 92-22-067 (Order 92-06), § 296-155-66401, filed 10/30/92, effective 12/8/92.]

WAC 296-155-66403 Appendix B-Sloping and benching.

(1) Scope and application. This appendix contains specifications for sloping and benching when used as methods of protecting employees working in excavations from cave-ins. The requirements of this appendix apply when the design of sloping and benching protective systems is to be performed in accordance with the requirements set forth in WAC 296-155-657 (2)(b).

(2) Definitions.

(a) **Actual slope.** The slope to which an excavation face is excavated.

(b) **Distress.** Soil that is in a condition where a cave-in is imminent or is likely to occur. Distress is evidenced by such phenomena as the development of fissures in the face of or adjacent to an open excavation; the subsidence of the edge of an excavation; the slumping of material from the face or the bulging or heaving of material from the bottom of an excavation; the spalling of material from the face of an excavation; and ravelling, i.e., small amounts of material such as pebbles or little clumps of material suddenly separating from the face of an excavation and trickling or rolling down into the excavation.

(c) **Maximum allowable slope.** The steepest incline of an excavation face that is acceptable for the most favorable site conditions as protection against cave-ins, and is expressed as the ratio of horizontal distance to vertical rise (H:V).

(3) Requirements.

(a) Soil classification. Soil and rock deposits shall be classified in accordance with appendix A of this Part.

(b) Maximum allowable slope. The maximum allowable slope for a soil or rock deposit shall be determined from Table N-1 of this appendix.

(c) Actual slope.

(i) The actual slope shall not be steeper than the maximum allowable slope.

(ii) The actual slope shall be less steep than the maximum allowable slope, when there are signs of distress. If that situation occurs, the slope shall be cut back to an actual slope which is at least 1/2 horizontal to one vertical (1/2H:1V) less steep than the maximum allowable slope.

WAC 296-155-66403 (Cont.)

(iii) When surcharge loads from stored material or equipment, operating equipment, or traffic are present, a competent person shall determine the degree to which the actual slope must be reduced below the maximum allowable slope, and shall assure that such reduction is achieved. Surcharge loads from adjacent structures shall be evaluated in accordance with WAC 296-155-655(9).

(d) Configurations. Configurations of sloping and benching systems shall be in accordance with Figures N-1 through N-18.

SOIL OR ROCK TYPE	MAXIMUM ALLOWABLE SLOPES (H:V) [1] FOR EXCAVATIONS LESS THAN 20 FEET DEEP [2]
STABLE ROCK	VERTICAL (90°)
TYPE A	3/4:1 (53°)
TYPE B	1:1 (45°)
TYPE C	1 1/2:1 (34°)

NOTES [1]: Numbers shown in parentheses next to maximum allowable slopes are angles expressed in degrees from the horizontal. Angles have been rounded off.

[2]: Sloping or benching for excavations greater than 20 feet deep shall be designed by a registered professional engineer.

Figure N-1

Slope Configurations for Type A Soil

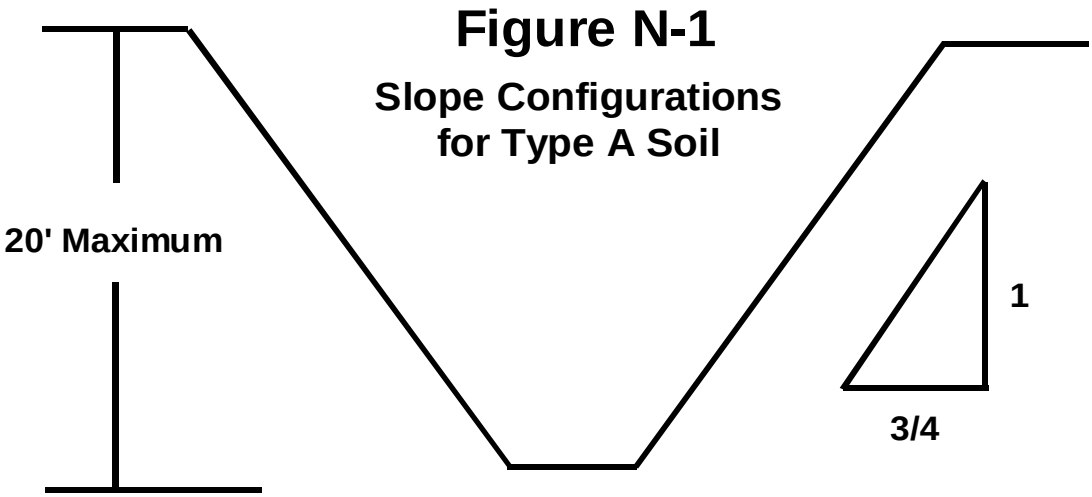

Simple Slope - General

All simple slope excavations 20 feet or less in depth shall have a maximum allowable slope of 3/4:1.

WAC 296-155-66403 (Cont.)

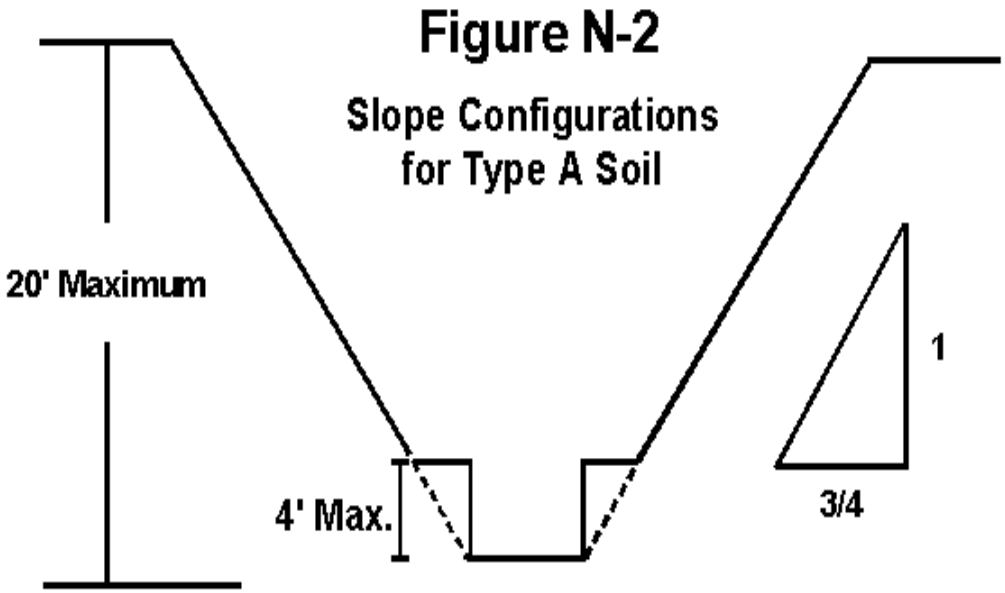

Simple Bench

All benched excavations 20 feet or less in depth shall have a maximum allowable slope of 3/4:1 and maximum bench dimensions of 4 feet.

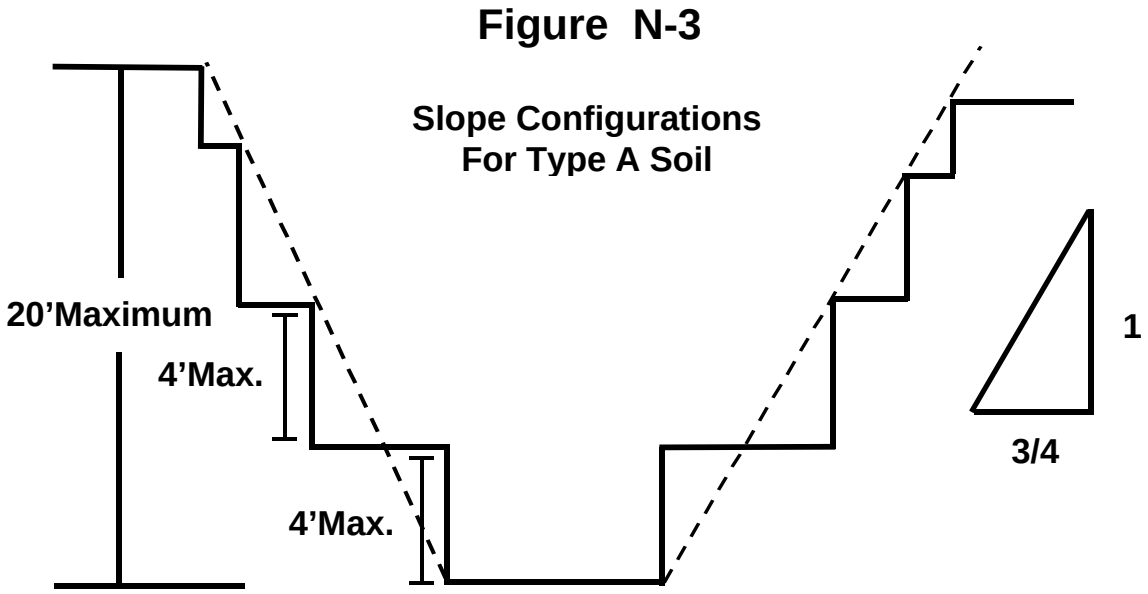

Multiple Bench

All benched excavations 20 feet or less in depth shall have a maximum allowable slope of 3/4:1 and maximum bench dimensions of 4 feet.

WAC 296-155-66403 (Cont.)

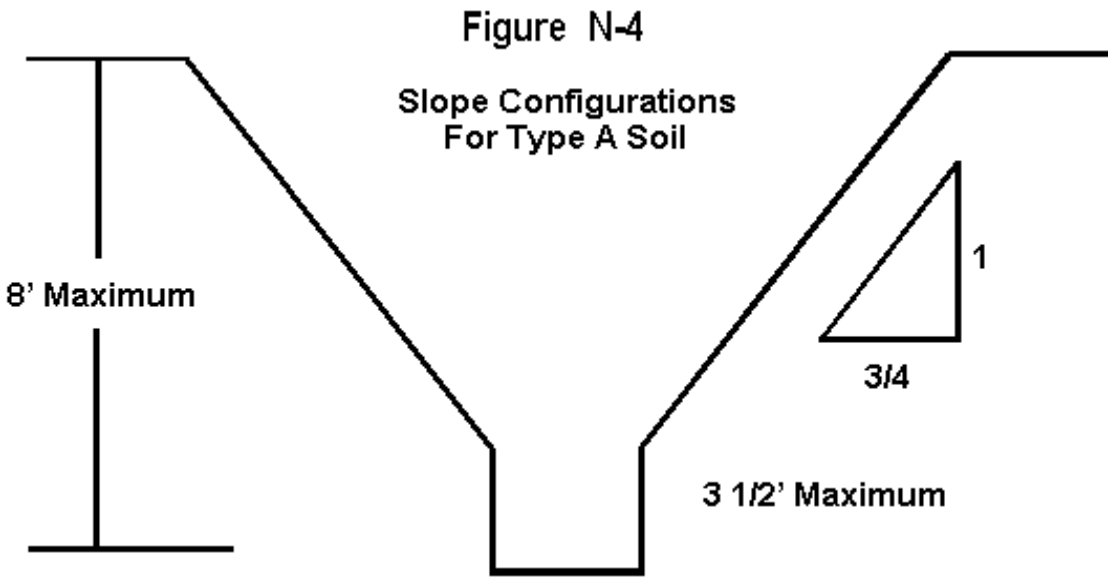

Unsupported Vertically Sided Lower Portion
Maximum 8 Feet in Depth

All excavations 8 feet or less in depth which have unsupported vertically sided lower portions shall have a maximum vertical side of 3½ feet.

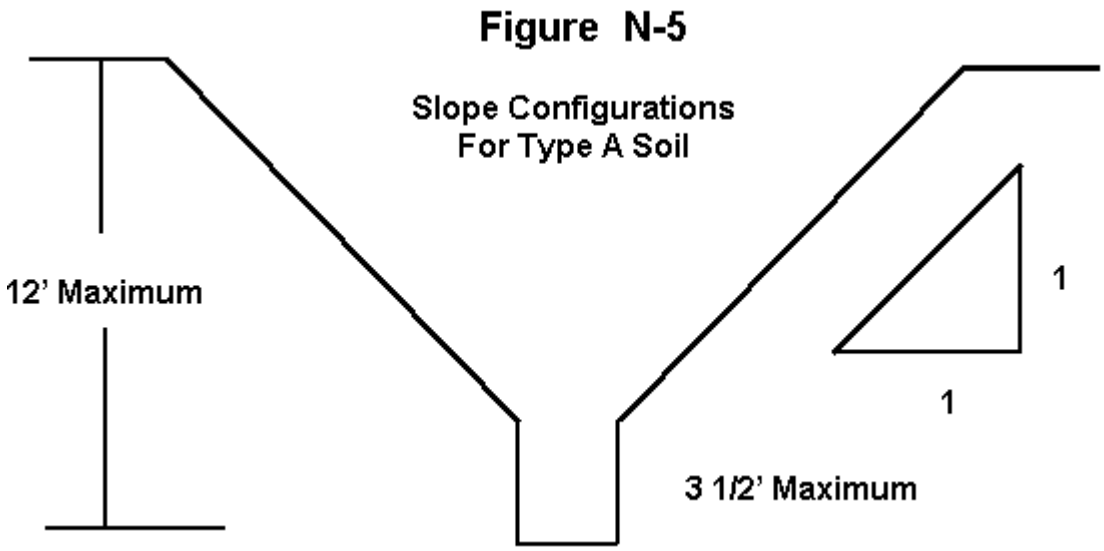

Unsupported Vertically Sided Lower Portion
Maximum 12 Feet in Depth

All excavations more than 8 feet but not more than 12 feet in depth which have unsupported vertically sided lower portions shall have a maximum allowable slope of 1:1 and vertical side of 3½ feet.

WAC 296-155-66403 (Cont.)

Figure N-6

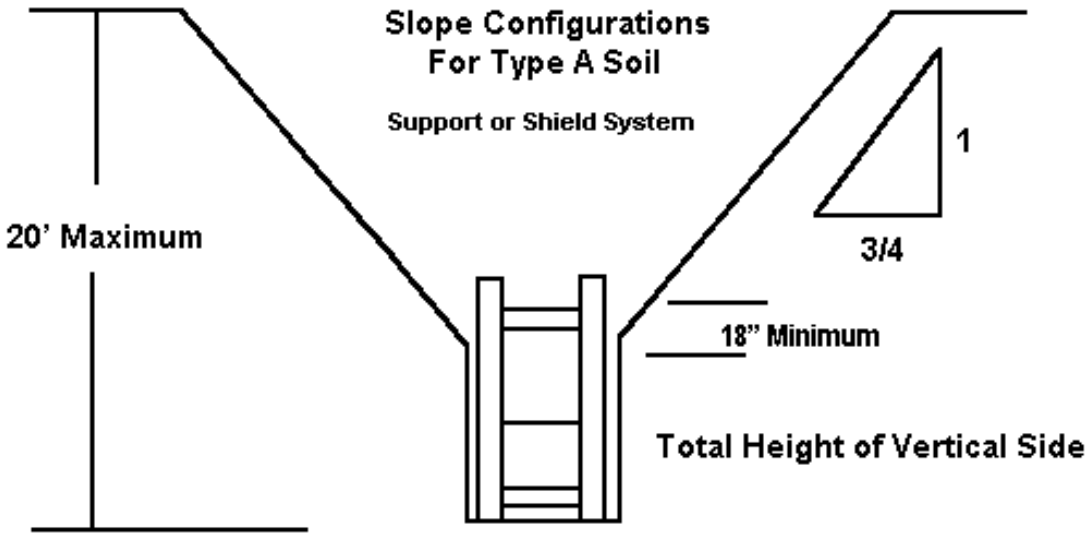

Unsupported Vertically Sided Lower Portion
Maximum 20 Feet in Depth

All excavations 20 feet or less in depth which have vertically sided lower portions that are supported or shielded shall have a maximum allowable slope of 3/4:1. The support or shield system must extend at least 18 inches above the top of the vertical side. All other simple slope, compound slope and vertically sided lower portion excavations shall be in accordance with options permitted under WAC 296-155-657(2).

Figure N-7

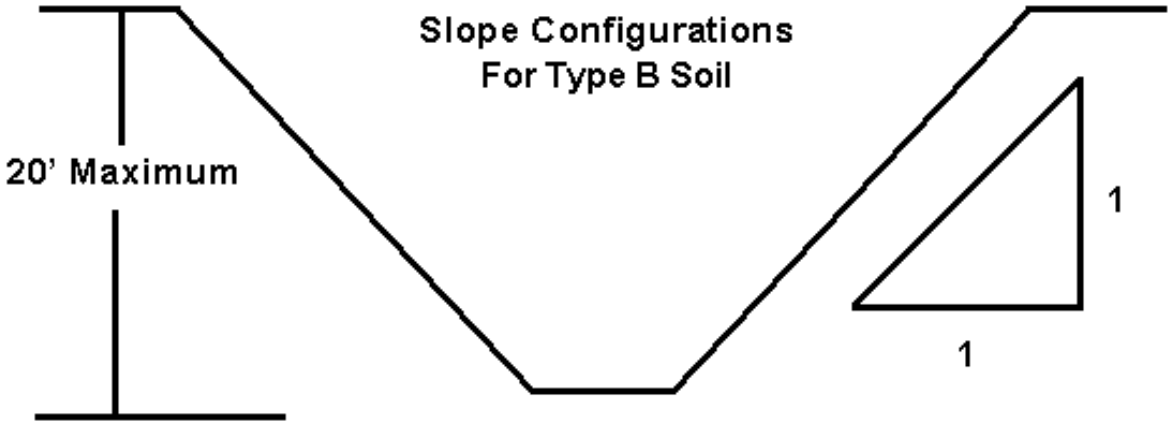

Simple Slope

All simple excavations 20 feet or less in depth shall have a maximum allowable slope of 1:1.

WAC 296-155-66403 (Cont.)

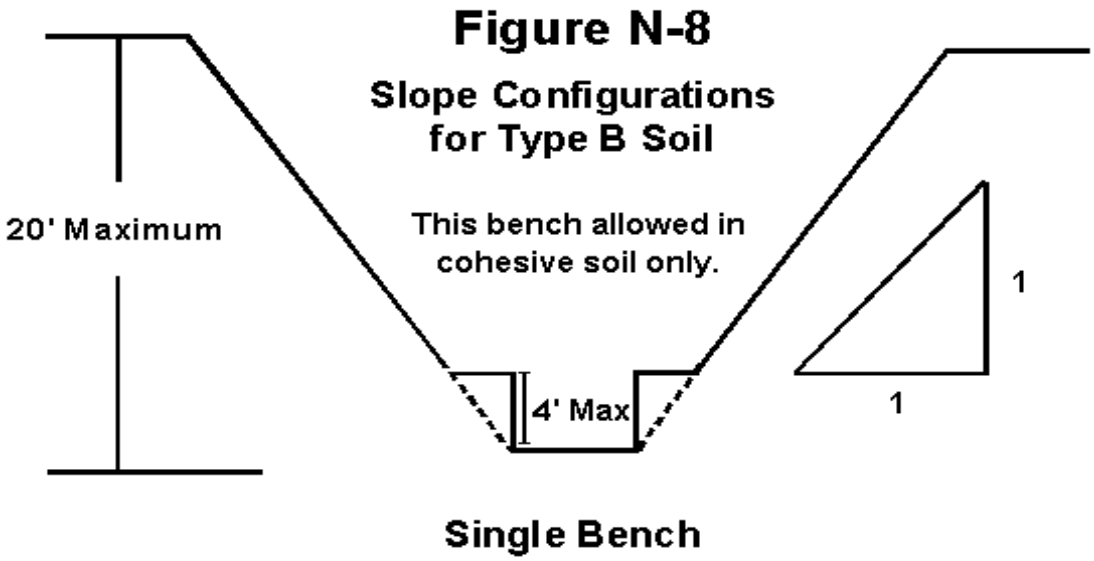

All excavations 20 feet or less in depth shall have a maximum allowable slope of 1:1 and maximum bench dimensions of 4 feet.

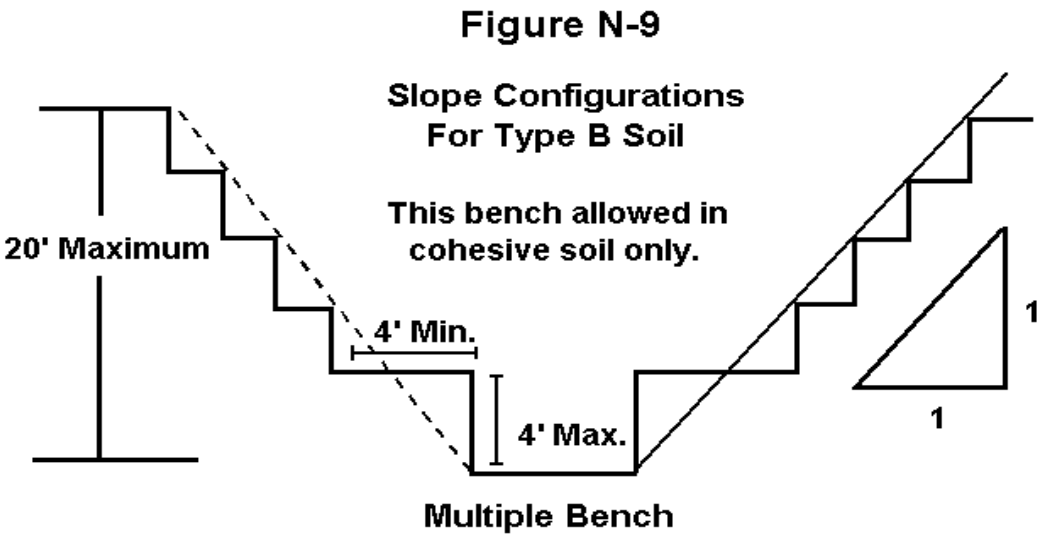

All excavations 20 feet or less in depth shall have a maximum allowable slope of 1:1 and maximum bench dimensions of 4 feet.

WAC 296-155-66403 (Cont.)

Figure N-10

Slope Configurations for Type B Soil

Support or Shield System

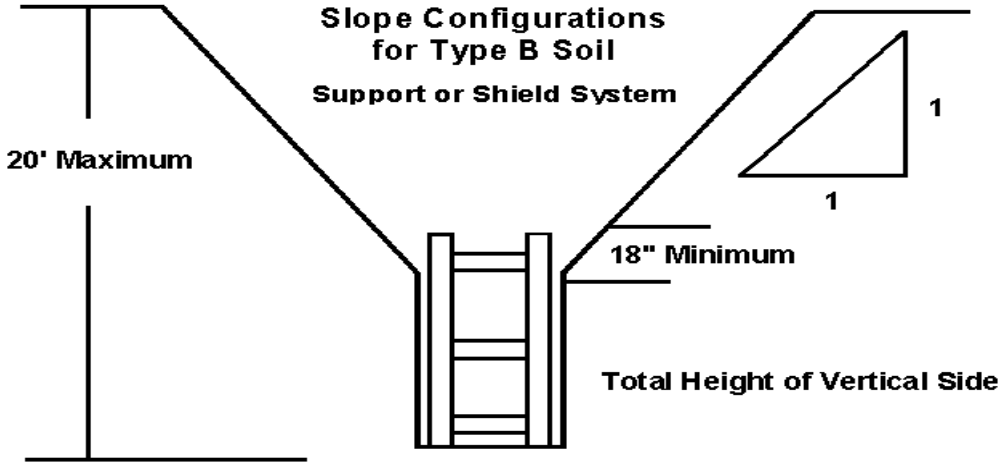

Vertically Sided Lower Portion

All excavations 20 feet or less in depth which have vertically sided lower portions shall be shielded or supported to a height at least 18 inches above the top of the vertical side. All such excavations shall have a maximum allowable slope of 1:1. All other simple slope, compound slope and vertically sided lower portion excavations shall be in accordance with options permitted under WAC 296-155-657(2).

Figure N-11

Slope Configurations For Type C Soil

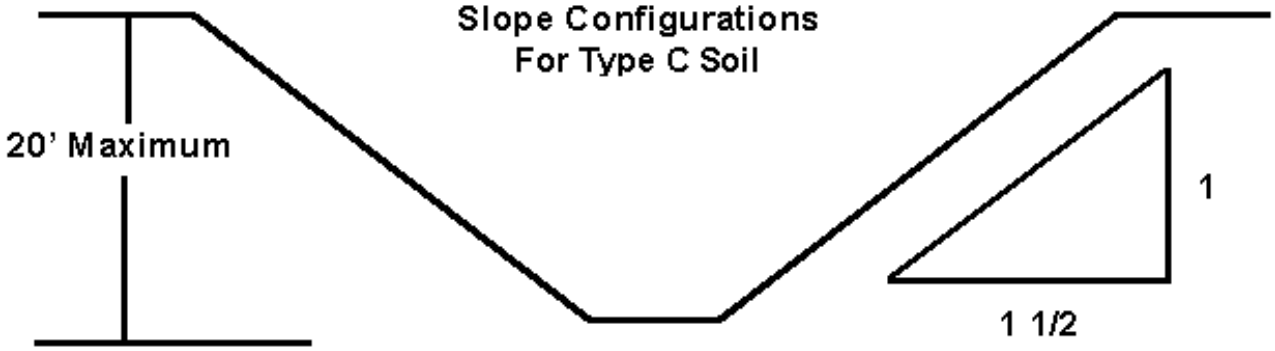

Simple Slope

All simple slope excavations 20 feet or less in depth shall have a maximum allowable slope of 1 1/2:1.

WAC 296-155-66403 (Cont.)

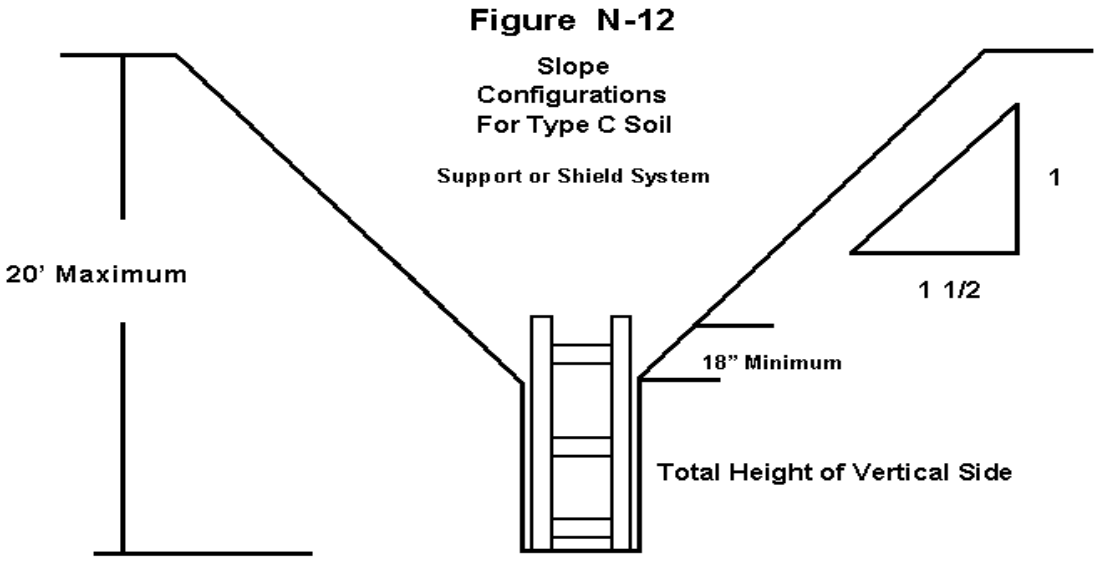

Vertically Sided Lower Portion

All excavations 20 feet or less in depth which have vertically sided lower portions shall be shielded or supported to a height at least 18 inches above the top of the vertical side. All such excavations shall have a maximum allowable slope of 1 1/2:1. All other simple slope, compound slope and vertically sided lower portion excavations shall be in accordance with options permitted under WAC 296-155-657(2).

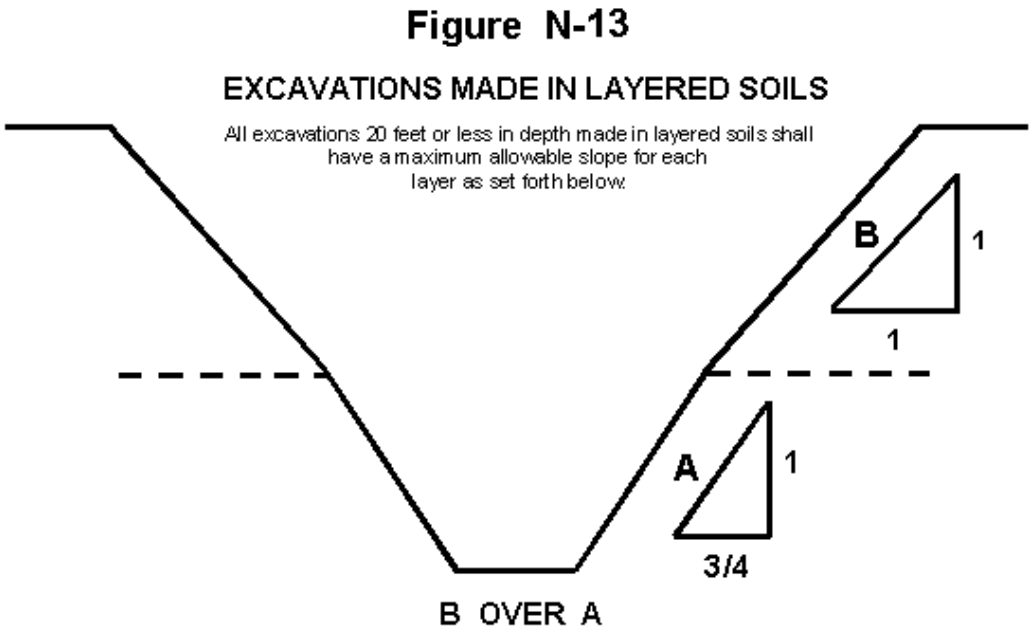

WAC 296-155-66403 (Cont.)

Figure N-14

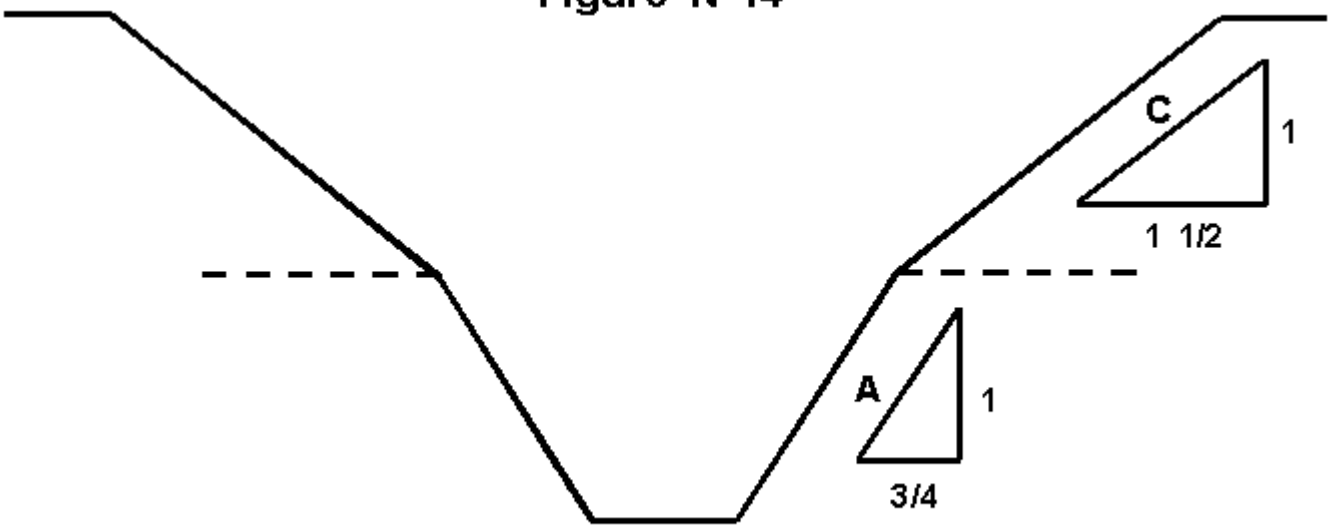

C OVER A

Figure N-15

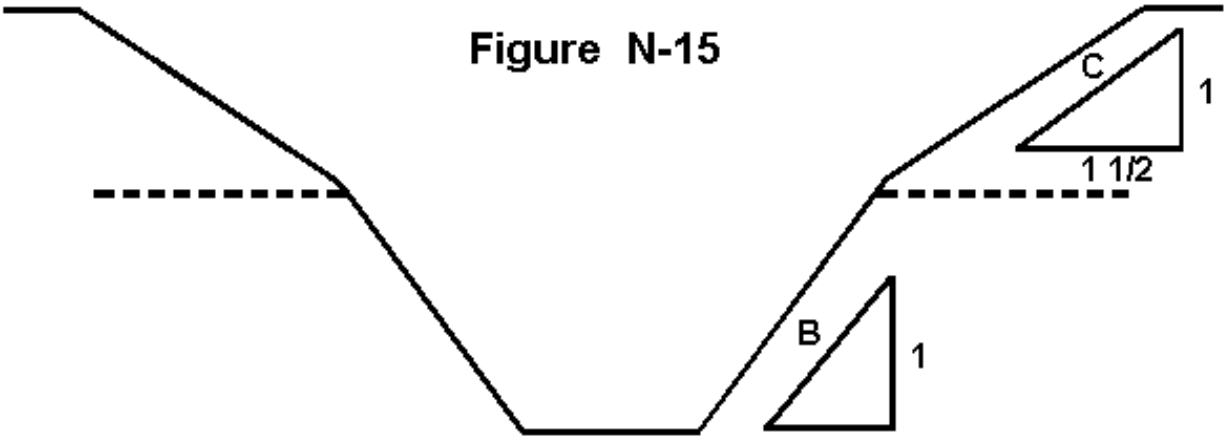

C OVER B

WAC 296-155-66403 (Cont.)

Figure N-16

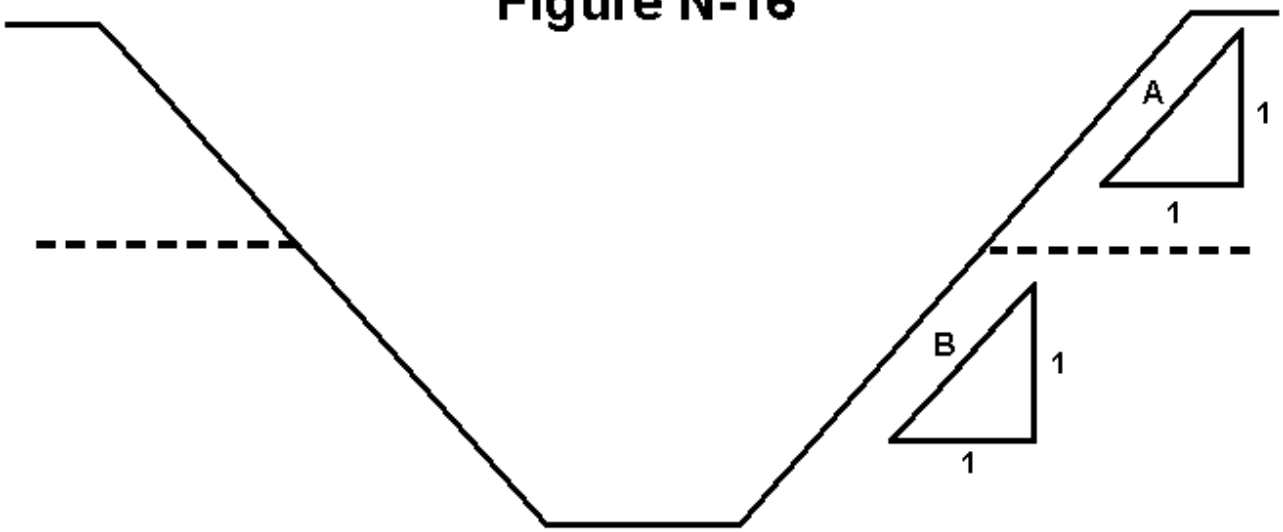

A OVER B

Figure N-17

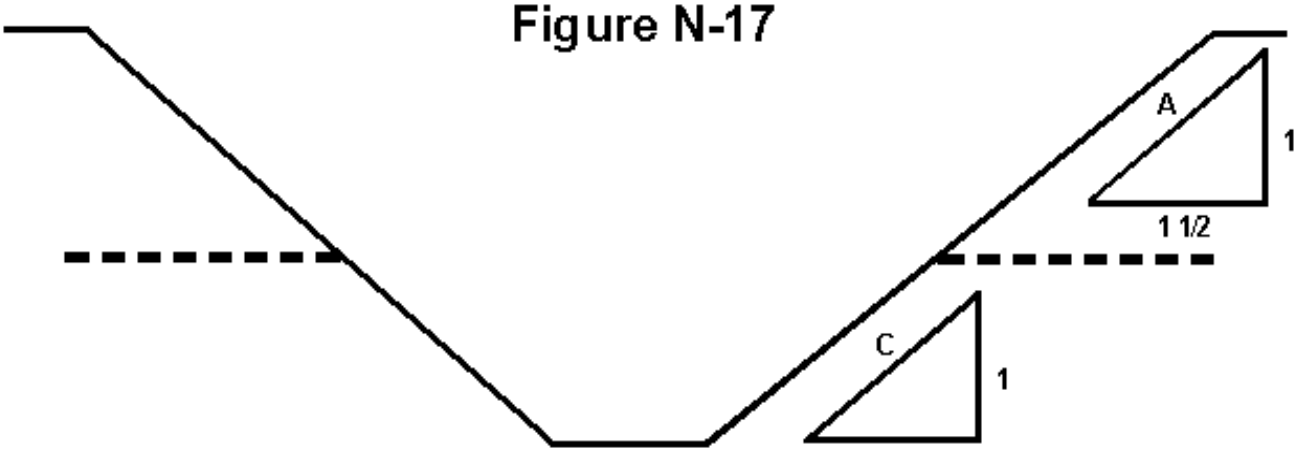

A OVER C

WAC 296-155-66403 (Cont.)

Figure N-18

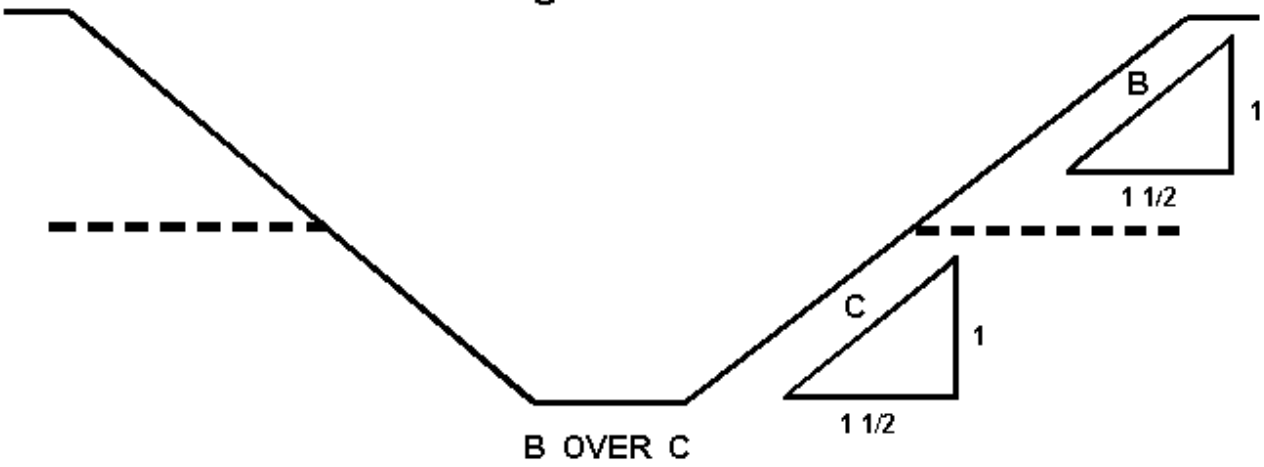

[Statutory Authority: RCW 49.17.010, .040, .050. 99-17-094 (Order 99-01), § 296-155-66403, filed 08/17/99, effective 12/01/99. Statutory Authority: Chapter 49.17 RCW and RCW 49.17.040, [49.17].050 and [49.17].060. 92-22-067 (Order 92-06), § 296-155-66403, filed 10/30/92, effective 2/8/92.]

WAC 296-155-66405 Appendix C-Timber shoring for trenches.

(1) Scope. This appendix contains information that can be used when timber shoring is provided as a method of protection from cave-ins in trenches that do not exceed 20 feet (6.1 m) in depth. This appendix must be used when design of timber shoring protective systems is to be performed in accordance with WAC 296-155-657 (3)(a). Other timber shoring configurations; other systems of support such as hydraulic and pneumatic systems; and other protective systems such as sloping, benching, shielding, and freezing systems must be designed in accordance with the requirements set forth in WAC 296-155-657 (2) and (3).

(2) Soil classification. In order to use the data presented in this appendix, the soil type or types in which the excavation is made must first be determined using the soil classification method set forth in appendix A of this part.

(3) Presentation of information. Information is presented in several forms as follows:

(a) Information is presented in tabular form in Tables N-2 through N-7 following subsection (7) of this appendix. Each table presents the minimum sizes of timber members to use in a shoring system, and each table contains data only for the particular soil type in which the excavation or portion of the excavation is made. The data are arranged to allow the user the flexibility to select from among several acceptable configurations of members based on varying the horizontal spacing of the crossbraces. Stable rock is exempt from shoring requirements and therefore, no data are presented for this condition.

(b) Information concerning the basis of the tabular data and the limitations of the data is presented in subsection (4) of this appendix, and on the tables themselves.

(c) Information explaining the use of the tabular data is presented in subsection (5) of this appendix.

(d) Information illustrating the use of the tabular data is presented in subsection (6) of this appendix.

(e) Miscellaneous notations regarding Tables N-2 through N-7 are presented in subsection (7) of this Appendix.

(4) Basis and limitations of the data.

(a) Dimensions of timber members.

(i) The sizes of the timber members listed in Tables N-2 through N-7 are taken from the National Bureau of Standards (NBS) report, “Recommended Technical Provisions for Construction Practice in Shoring and Sloping of Trenches and Excavations.” In addition, where NBS did not recommend specific sizes of members, member sizes are based on an analysis of the sizes required for use by existing codes and on empirical practice.

(ii) The required dimensions of the members listed in Tables N-2, N-3, and N-4 refer to actual dimensions and not nominal dimensions of the timber. Employers wanting to use nominal size shoring are directed to Tables N-5, N-6, and N-7, or have this choice under WAC 296-155-657 (3)(c), and are referred to The Corps of Engineers, The Bureau of Reclamation or data from other acceptable sources.

WAC 296-155-66405 (Cont.)

(b) Limitation of application.

(i) It is not intended that the timber shoring specification apply to every situation that may be experienced in the field. These data were developed to apply to the situations that are most commonly experienced in current trenching practice. Shoring systems for use in situations that are not covered by the data in this appendix must be designed as specified in WAC 296-155-657(3).

(ii) When any of the following conditions are present, the members specified in the tables are not considered adequate. Either an alternate timber shoring system must be designed or another type of protective system designed in accordance with WAC 296-155-657.

(A) When loads imposed by structures or by stored material adjacent to the trench weigh in excess of the load imposed by a two-foot soil surcharge. The term **"adjacent"** as used here means the area within a horizontal distance from the edge of the trench equal to the depth of the trench.

(B) When vertical loads imposed on cross braces exceed a 240-pound gravity load distributed on a one-foot section of the center of the crossbrace.

(C) When surcharge loads are present from equipment weighing in excess of 20,000 pounds.

(D) When only the lower portion of a trench is shored and the remaining portion of the trench is sloped or benched unless: The sloped portion is sloped at an angle less steep than three horizontal to one vertical; or the members are selected from the tables for use at a depth which is determined from the top of the overall trench, and not from the toe of the sloped portion.

(5) Use of Tables. The members of the shoring system that are to be selected using this information are the cross braces, the uprights, and the wales, where wales are required. Minimum sizes of members are specified for use in different types of soil. There are six tables of information, two for each soil type. The soil type must first be determined in accordance with the soil classification system described in appendix A of this Part. Using the appropriate table, the selection of the size and spacing of the members is then made. The selection is based on the depth and width of the trench where the members are to be installed and, in most instances, the selection is also based on the horizontal spacing of the crossbraces. Instances where a choice of horizontal spacing of crossbracing is available, the horizontal spacing of the crossbraces must be chosen by the user before the size of any member can be determined. When the soil type, the width and depth of the trench, and the horizontal spacing of the crossbraces are known, the size and vertical spacing of the crossbraces, the size and vertical spacing of the wales, and the size and horizontal spacing of the uprights can be read from the appropriate table.

(6) Examples to illustrate the use of Tables N-2 through N-4.

(a) Example 1.

A trench dug in Type A soil is 13 feet deep and five feet wide.
From Table N-2, for acceptable arrangements of timber can be used.
Arrangement #
Space 4x4 crossbraces at six feet horizontally and four feet vertically.
Wales are not required.

WAC 296-155-66405 (Cont.)

Space 3x8 uprights at six feet horizontally. This arrangement is commonly called "skip shoring."

Arrangement ~~2~~
Space 4x6 crossbraces at eight feet horizontally and four feet vertically.
Space 8x8 wales at four feet vertically.
Space 2x6 uprights at four feet horizontally.
Arrangement ~~3~~
Space 6x6 crossbraces at 10 feet horizontally and four feet vertically.
Space 8x10 wales at four feet vertically.
Space 2x6 uprights at five feet horizontally.
Arrangement ~~4~~
Space 6x6 crossbraces at 12 feet horizontally and four feet vertically.
Space 10x10 wales at four feet vertically.
Space 3x8 uprights at six feet horizontally.

(b) Example 2.

A trench dug in Type B soil in 13 feet deep and five feet wide.
From Table N-3 three acceptable arrangements of members are listed.
Arrangement ~~1~~
Space 6x6 crossbraces at six feet horizontally and five feet vertically.
Space 8x8 wales at five feet vertically.
Space 2x6 uprights at two feet horizontally.
Arrangement ~~2~~
Space 6x8 crossbraces at eight feet horizontally and five feet vertically.
Space 10x10 wales at five feet vertically.
Space 2x6 uprights at two feet horizontally.
Arrangement ~~3~~
Space 8x8 crossbraces at 10 feet horizontally and five feet vertically.
Space 10x12 wales at five feet vertically.
Space 2x6 uprights at two feet vertically.

(c) Example 3.

A trench dug Type C soil is 13 feet deep and five feet wide.
From Table N-4 two acceptable arrangements of members can be used.
Arrangement ~~1~~
Space 8x8 crossbraces at six feet horizontally and five feet vertically.
Space 10x12 wales at five feet vertically.
Position 2x6 uprights as closely together as possible.
If water must be retained use special tongue and groove uprights to form tight sheeting.
Arrangement ~~2~~
Space 8x10 crossbraces at eight feet horizontally and five feet vertically.
Space 12x12 wales at five feet vertically.
Position 2x6 uprights in a close sheeting configuration unless water pressure must be resisted. Tight sheeting must be used where water must be retained.

WAC 296-155-66405 (Cont.)

(d) Example 4.

A trench dug in Type C soil is 20 feet deep and 11 feet wide. The size and spacing of members for the section of trench that is over 15 feet in depth is determined using Table N-4. Only one arrangement of members is provided.
Space 8x10 crossbraces at six feet horizontally and five feet vertically.
Space 12x12 wales at five feet vertically.
Use 3x6 tight sheeting.
Use of Tables N-5, N-6, and N-7 would follow the same procedures.

(7) Notes for all tables.

(a) Member sizes at spacings other than indicated are to be determined as specified in WAC 296-155-657(3). "Design of Protective Systems."

(b) When conditions are saturated or submerged use Tight Sheeting. Tight Sheeting refers to the use of specially-edged timber planks (e.g., tongue and groove) at least three inches thick, steel sheet piling, or similar construction that when driven or placed in position provide a tight wall to resist the lateral pressure of water and to prevent the loss of backfill material. Close Sheeting refers to the placement of planks side-by-side allowing as little space as possible between them.

(c) All spacing indicated is measured center to center.

(d) Wales to be installed with greater dimension horizontal.

(e) If the vertical distance from the center of the lowest crossbrace to the bottom of the trench exceeds two and one-half feet, uprights shall be firmly embedded or a mudsill shall be used. Where uprights are embedded, the vertical distance from the center of the lowest crossbrace to the bottom of the trench shall not exceed 36 inches. When mudsills are used, the vertical distance shall not exceed 42 inches. Mudsills are wales that are installed at the toe of the trench side.

(f) Trench jacks may be used in lieu of or in combination with timber crossbraces.

(g) Placement of crossbraces. When the vertical spacing of crossbraces is four feet, place the top crossbrace no more than two feet below the top of the trench. When the vertical spacing of crossbraces is five feet, place the top crossbrace no more than 2.5 feet below the top of the trench.

WAC 296-155-66405 (Cont.)

TABLE N-2

TIMBER TRENCH SHORING -- MINIMUM TIMBER REQUIREMENTS*
SOIL TYPE A P_a - 25 X H + 72 psf (2 ft. Surcharge)

DEPTH OF TRENCH (FEET)	SIZE (ACTUAL) AND SPACING OF MEMBERS **													
	CROSS BRACES							WALES		UPRIGHTS				
	HORIZ. SPACING (FEET)	WIDTH OF TRENCH (FEET)					VERT. SPACING (FEET)	SIZE (IN.)	VERT. SPACING (FEET)	MAXIMUM ALLOWABLE HORIZONTAL SPACING (FEET)				
		UP TO 4	UP TO 6	UP TO 9	UP TO 12	UP TO 15				CLOSE	4	5	6	7
4 TO 10	UP TO 6	4 X 4	4 X 4	4 X 6	6 X 6	6 X 6	4	Not Req'd	---				2 X 6	
	UP TO 8	4 X 4	4 X 4	4 X 6	6 X 6	6 X 6	4	Not Req'd	---					2 X 8
	UP TO 10	4 X 6	4 X 6	4 X 6	6 X 6	6 X 6	4	8 X 8	4			2 X 6		
	UP TO 12	4 X 6	4 X 6	4 X 6	6 X 6	6 X 6	4	8 X 8	4				2 X 6	
10 TO 15	UP TO 6	4 X 4	4 X 4	4 X 4	6 X 6	6 X 6	4	Not Req'd	---				3 X 8	
	UP TO 8	4 X 6	4 X 6	4 X 6	6 X 6	6 X 6	4	8 X 8	4		2 X 6			
	UP TO 10	6 X 6	6 X 6	6 X 6	6 X 8	6 X 8	4	8 X 10	4			2 X 6		
	UP TO 12	6 X 6	6 X 6	6 X 6	6 X 8	6 X 8	4	10 X 10	4				3 X 8	
15 TO 20	UP TO 6	6 X 6	6 X 6	6 X 6	6 X 8	6 X 8	4	6 X 8	4	3 X 6				
	UP TO 8	6 X 6	6 X 6	6 X 6	6 X 8	6 X 8	4	8 X 8	4	3 X 6				
	UP TO 10	8 X 8	8 X 8	8 X 8	8 X 8	8 X 10	4	8 X 10	4	3 X 6				
	UP TO 12	8 X 8	8 X 8	8 X 8	8 X 8	8 X 10	4	10 X 10	4	3 X 6				
OVER 20	SEE NOTE 1													

* Mixed oak or equivalent with a bending strength not less than 850 psi.
** Manufacturered members of equivalent strength may be substituted for wood.

WAC 296-155-66405 (Cont.)

TABLE N-3

TIMBER TRENCH SHORING -- MINIMUM TIMBER REQUIREMENTS*
SOIL TYPE B P_a - 45 X H + 72 psf (2 ft. Surcharge)

DEPTH OF TRENCH (FEET)	SIZE (ACTUAL) AND SPACING OF MEMBERS **													
	CROSS BRACES							WALES		UPRIGHTS				
	HORIZ. SPACING (FEET)	WIDTH OF TRENCH (FEET)					VERT. SPACING (FEET)	SIZE (IN.)	VERT. SPACING (FEET)	MAXIMUM ALLOWABLE HORIZONTAL SPACING (FEET)				
		UP TO 4	UP TO 6	UP TO 9	UP TO 12	UP TO 15				CLOSE	2	3		
4 TO 10	UP TO 6	4 X 4	4 X 4	6 X 6	6 X 6	6 X 6	5	6 X 8	5			2 X 6		
	UP TO 8	4 X 4	4 X 4	6 X 6	6 X 8	6 X 8	5	8 X 10	5			2 X 6		
	UP TO 10	4 X 6	4 X 6	6 X 6	6 X 8	6 X 8	5	8 X 8	5			2 X 6		
	See Note 1													
10 TO 15	UP TO 6	4 X 4	4 X 4	6 X 6	6 X 8	6 X 8	5	8 X 8	5		2 X 6			
	UP TO 8	4 X 6	4 X 6	6 X 8	8 X 8	8 X 8	5	10 X 10	5		2 X 6			
	UP TO 10	6 X 6	6 X 6	8 X 8	8 X 8	8 X 10	5	10 X 12	5		2 X 6			
	See Note 1													
15 TO 20	UP TO 6	6 X 8	6 X 8	6 X 8	8 X 8	8 X 8	5	8 X 10	5	3 X 6				
	UP TO 8	8 X 8	8 X 8	8 X 8	8 X 8	8 X 10	5	10 X 10	5	3 X 6				
	UP TO 10	8 X 10	8 X 10	8 X 10	8 X 10	10 X 10	5	10 X 12	5	3 X 6				
	See Note 1													
OVER 20	SEE NOTE 1													

* Mixed oak or equivalent with a bending strength not less than 850 psi.
** Manufacturered members of equivalent strength may be substituted for wood.

WAC 296-155-66405 (Cont.)

TABLE N-4

TIMBER TRENCH SHORING -- MINIMUM TIMBER REQUIREMENTS*
SOIL TYPE C P_a - 80 X H + 72 psf (2 ft. Surcharge)

DEPTH OF TRENCH (FEET)	SIZE (ACTUAL) AND SPACING OF MEMBERS **													
	CROSS BRACES							WALES		UPRIGHTS				
	HORIZ. SPACING (FEET)	WIDTH OF TRENCH (FEET)					VERT. SPACING (FEET)	SIZE (IN.)	VERT. SPACING (FEET)	MAXIMUM ALLOWABLE HORIZONTAL SPACING (FEET)				
		UP TO 4	UP TO 6	UP TO 9	UP TO 12	UP TO 15				CLOSE				
4 TO 10	UP TO 6	6 X 8	6 X 8	6 X 8	8 X 8	8 X 8	5	8 X 10	5	2 X 6				
	UP TO 8	8 X 8	8 X 8	8 X 8	8 X 8	8 X 10	5	10 X 12	5	2 X 6				
	UP TO 10	8 X 10	8 X 10	8 X 10	8 X 10	10 X 10	5	12 X 12	5	2 X 6				
	See Note 1													
10 TO 15	UP TO 6	8 X 8	8 X 8	8 X 8	8 X 8	8 X 10	5	10 X 12	5	2 X 6				
	UP TO 8	8 X 10	8 X 10	8 X 10	8 X 10	10 X 10	5	12 X 12	5	2 X 6				
	See Note 1													
	See Note 1													
15 TO 20	UP TO 6	8 X 10	8 X 10	8 X 10	8 X 10	10 X 10	5	12 X 12	5	3 X 6				
	See Note 1													
	See Note 1													
	See Note 1													
OVER 20	SEE NOTE 1													

* Mixed oak or equivalent with a bending strength not less than 850 psi.
** Manufacturered members of equivalent strength may be substituted for wood.

WAC 296-155-66405 (Cont.)

TABLE N-3

TIMBER TRENCH SHORING -- MINIMUM TIMBER REQUIREMENTS*
SOIL TYPE B P_a - 45 X H + 72 psf (2 ft. Surcharge)

DEPTH OF TRENCH (FEET)	SIZE (ACTUAL) AND SPACING OF MEMBERS **													
	CROSS BRACES							WALES		UPRIGHTS				
	HORIZ. SPACING (FEET)	WIDTH OF TRENCH (FEET)					VERT. SPACING (FEET)	SIZE (IN.)	VERT. SPACING (FEET)	MAXIMUM ALLOWABLE HORIZONTAL SPACING (FEET)				
		UP TO 4	UP TO 6	UP TO 9	UP TO 12	UP TO 15				CLOSE	2	3		
4 TO 10	UP TO 6	4 X 4	4 X 4	6 X 6	6 X 6	6 X 6	5	6 X 8	5			2 X 6		
	UP TO 8	4 X 4	4 X 4	6 X 6	6 X 8	6 X 8	5	8 X 10	5			2 X 6		
	UP TO 10	4 X 6	4 X 6	6 X 6	6 X 8	6 X 8	5	8 X 8	5			2 X 6		
	See Note 1													
10 TO 15	UP TO 6	4 X 4	4 X 4	6 X 6	6 X 8	6 X 8	5	8 X 8	5		2 X 6			
	UP TO 8	4 X 6	4 X 6	6 X 8	8 X 8	8 X 8	5	10 X 10	5		2 X 6			
	UP TO 10	6 X 6	6 X 6	8 X 8	8 X 8	8 X 10	5	10 X 12	5		2 X 6			
	See Note 1													
15 TO 20	UP TO 6	6 X 8	6 X 8	6 X 8	8 X 8	8 X 8	5	8 X 10	5	3 X 6				
	UP TO 8	8 X 8	8 X 8	8 X 8	8 X 8	8 X 10	5	10 X 10	5	3 X 6				
	UP TO 10	8 X 10	8 X 10	8 X 10	8 X 10	10 X 10	5	10 X 12	5	3 X 6				
	See Note 1													
OVER 20	SEE NOTE 1													

* Mixed oak or equivalent with a bending strength not less than 850 psi.
** Manufacturered members of equivalent strength may be substituted for wood.

WAC 296-155-66405 (Cont.)

TABLE N-6

TIMBER TRENCH SHORING -- MINIMUM TIMBER REQUIREMENTS*
SOIL TYPE B P_a - 45 X H + 72 psf (2 ft. Surcharge)

DEPTH OF TRENCH (FEET)	SIZE (S4S) AND SPACING OF MEMBERS **													
	CROSS BRACES							WALES		UPRIGHTS				
	HORIZ. SPACING (FEET)	WIDTH OF TRENCH (FEET)					VERT. SPACING (FEET)	SIZE (IN.)	VERT. SPACING (FEET)	MAXIMUM ALLOWABLE HORIZONTAL SPACING (FEET)				
		UP TO 4	UP TO 6	UP TO 9	UP TO 12	UP TO 15				CLOSE	2	3	4	6
4 TO 10	UP TO 6	4 X 6	4 X 6	4 X 6	6 X 6	6 X 6	5	6 X 8	5			3 X 12 4 X 8		4 X 12
	UP TO 8	4 X 6	4 X 6	6 X 6	6 X 6	6 X 6	5	8 X 8	5		3 X 8		4 X 8	
	UP TO 10	4 X 6	4 X 6	6 X 6	6 X 6	6 X 8	5	8 X 10	5			4 X 8		
	See Note 1													
10 TO 15	UP TO 6	6 X 6	6 X 6	6 X 6	6 X 8	6 X 8	5	8 X 8	5	3 X 6	4 X 10			
	UP TO 8	6 X 6	6 X 8	6 X 8	8 X 8	8 X 8	5	10 X 10	5	3 X 6	4 X 10			
	UP TO 10	6 X 8	6 X 8	8 X 8	8 X 8	8 X 8	5	10 X 12	5	3 X 6	4 X 10			
	See Note 1													
15 TO 20	UP TO 6	6 X 8	6 X 8	6 X 8	6 X 8	8 X 8	5	8 X 10	5	4 X 6				
	UP TO 8	6 X 8	6 X 8	6 X 8	8 X 8	8 X 8	5	10 X 12	5	4 X 6				
	UP TO 10	8 X 8	8 X 8	8 X 8	8 X 8	8 X 8	5	12 X 12	5	4 X 6				
	See Note 1													
OVER 20	SEE NOTE 1													

* Douglas fir or equivalent with a bending strength not less than 1500 psi.
** Manufacturered members of equivalent strength may be substituted for wood.

WAC 296-155-66405 (Cont.)

TABLE N-7

TIMBER TRENCH SHORING -- MINIMUM TIMBER REQUIREMENTS*
SOIL TYPE C P_a - 80 X H + 72 psf (2 ft. Surcharge)

DEPTH OF TRENCH (FEET)	SIZE (S4S) AND SPACING OF MEMBERS **													
	CROSS BRACES							WALES		UPRIGHTS				
	HORIZ. SPACING (FEET)	WIDTH OF TRENCH (FEET)					VERT. SPACING (FEET)	SIZE (IN.)	VERT. SPACING (FEET)	MAXIMUM ALLOWABLE HORIZONTAL SPACING (FEET)				
		UP TO 4	UP TO 6	UP TO 9	UP TO 12	UP TO 15				CLOSE				
4 TO 10	UP TO 6	6 X 6	6 X 6	6 X 6	6 X 6	8 X 8	5	8 X 8	5	3 X 6				
	UP TO 8	6 X 6	6 X 6	6 X 6	8 X 8	8 X 8	5	10 X 10	5	3 X 6				
	UP TO 10	6 X 6	6 X 6	8 X 8	8 X 8	8 X 8	5	10 X 12	5	3 X 6				
	See Note 1													
10 TO 15	UP TO 6	6 X 8	6 X 8	6 X 8	8 X 8	8 X 8	5	10 X 10	5	4 X 6				
	UP TO 8	8 X 8	8 X 8	8 X 8	8 X 8	8 X 8	5	12 X 12	5	4 X 6				
	See Note 1													
	See Note 1													
15 TO 20	UP TO 6	8 X 8	8 X 8	8 X 8	8 X 10	8 X 10	5	10 X 12	5	4 X 6				
	See Note 1													
	See Note 1													
	See Note 1													
OVER 20	SEE NOTE 1													

* Douglas fir or equivalent with a bending strength not less than 1500 psi.
** Manufacturered members of equivalent strength may be substituted for wood.

[Statutory Authority: Chapter 49.17 RCW and RCW 49.17.040, [49.17].050 and [49.17].060. 92-22-067 (Order 92-06), § 296-155-66405, filed 10/30/92, effective 12/8/92.]

WAC 296-155-66407 Appendix D-Aluminum hydraulic shoring for trenches.

(1) Scope. This appendix contains information that can be used when aluminum hydraulic shoring is provided as a method of protection against cave-ins in trenches that do not exceed 20 feet (6.1m) in depth. This appendix must be used when design of the aluminum hydraulic protective system cannot be performed in accordance with WAC 296-155-657 (3)(b).

(2) Soil Classification. In order to use data presented in this appendix, the soil type or types in which the excavation is made must first be determined using the soil classification method set forth in appendix A of this Part.

(3) Presentation of information. Information is presented in several forms as follows:

(a) Information is presented in tabular form in Tables N-8 through N-11. Each table presents the maximum vertical and horizontal spacings that may be used with various aluminum member sizes and various hydraulic cylinder sizes. Each table contains data only for the particular soil type in which the excavation or portion of the excavation is made. Tables N-8 and N-9 are for vertical shores in Types A and B soil. Tables N-10 and N-11 are for horizontal waler systems in Types B and C soil.

WAC 296-155-66407 (Cont.)

(b) Information concerning the basis of the tabular data and the limitations of the data is presented in subsection (4) of this appendix.

(c) Information explaining the use of the tabular data is presented in subsection (5) of this appendix.

(d) Information illustrating the use of the tabular data is presented in subsection (6) of this appendix.

(e) Miscellaneous notations (footnotes) regarding Table N-8 through N-11 are presented in subsection (7) of this appendix.

(f) Figures, illustrating typical installations of hydraulic shoring, are included just prior to the Tables. The illustrations page is entitled "Aluminum Hydraulic Shoring: Typical Installations."

(4) Basis and limitations of the data.

(a) Vertical shore rails and horizontal wales are those that meet the Section Modulus requirements in Tables N-8 through N-10. Aluminum material is 6061-T6 or material of equivalent strength and properties.

(b) Hydraulic cylinders specifications.

(i) 2-inch cylinders shall be a minimum 2-inch inside diameter with a minimum safe working capacity of no less than 18,000 pounds axial compressive load at maximum extension. Maximum extension is to include full range of cylinder extensions as recommended by product manufacturer.

(ii) 3-inch cylinders shall be a minimum 3-inch inside diameter with a safe working capacity of not less than 30,000 pounds axial compressive load at extensions as recommended by product manufacturer.

(c) Limitation of application.

(i) It is not intended that the aluminum hydraulic specification apply to every situation that may be experienced in the field. These data were developed to apply to the situations that are most commonly experienced in current trenching practice. Shoring systems for use in situations that are not covered by the data in this appendix must be otherwise designed as specified in WAC 296-155-657(3).

(ii) When any of the following conditions are present; the members specified in the Tables are not considered adequate. In this case, an alternative aluminum hydraulic shoring system or other type of protective system must be designed in accordance with WAC 296-155-657.

(A) When vertical loads imposed on cross braces exceed a 100 Pound gravity load distributed on a one foot section of the center of the hydraulic cylinder.

(B) When surcharge loads are present from equipment weighing in excess of 20,000 pounds.

WAC 296-155-66407 (Cont.)

(C) When only the lower portion of a trench is shored and the remaining portion of the trench is sloped or benched unless: The slope portion is sloped at an angle less steep than three horizontal to one vertical; or the members are selected from the tables for use at a depth which is determined from the top of the overall trench, and not from the toe of the sloped portion.

(5) Use of Tables N-8 through N-11. The members of the shoring system that are to be selected using this information are the hydraulic cylinders, and either the vertical shores or the horizontal wales. When a waler system is used the vertical timber sheeting to be used is also selected from these tables. The Tables N-8 and N-9 for vertical shores are used in Type A and B soils that do not require sheeting. Type B soils that may require sheeting, and Type C soils that always require sheeting are found in the horizontal wale Tables N-10 and N-11. The soil type must first be determined in accordance with the soil classification system described in appendix A of this Part. Using the appropriate table, the selection of the size and spacing of the members is made. The selection is based on the depth and width of the trench where the members are to be installed. In these tables the vertical spacing is held constant at four feet on center. The tables show the maximum horizontal spacing of cylinders allowed for each size of wale in the waler system tables, and in the vertical shore tables, the hydraulic cylinder horizontal spacing is the same as the vertical shore spacing.

(6) Example to Illustrate the Use of the Tables:

(a) Example 1: A trench dug in Type A soil is 6 feet deep and 3 feet wide. From Table N-8: Find vertical shores and 2 inch diameter cylinders spaced 8 feet on center (o.c.) horizontally and 4 feet on center (o.c.) vertically. (See Figures N-23 & N-25 for typical installations.)

(b) Example 2: A trench is dug in Type B soil that does not require sheeting, 13 feet deep and 5 feet wide. From Table N-9: Find vertical shores and 2 inch diameter cylinders spaced 6.5 feet o.c. horizontally and 4 feet o.c. vertically. (See Figures N-23 & N-25 for typical installations.)

(c) A trench is dug in Type B soil that does not require sheeting, but does experience some minor raveling of the trench face. The trench is 16 feet deep and 9 feet wide. From Table N-9: Find vertical shores and 2 inch diameter cylinder (with special oversleeves as designated by subdivision (7)(b)) spaced 5.5 feet o.c. horizontally and 4 feet o.c. vertically, plywood (per subdivision (7)(g) to the N-8 through N-11 Tables) should be used behind the shores. (See Figures N-24 & N-25 for typical installations.)

(d) Example 4: A trench is dug in previously disturbed Type B soil, with characteristics of a Type C soil, and will require sheeting. The trench is 18 feet deep and 12 feet wide. 8 foot horizontal spacing between cylinders is desired for working space. From Table N-10: Find horizontal wale with a section modulus of 14.0 spaced at 4 feet o.c. vertically and 3 inch diameter cylinder spaced at 9 feet maximum o.c. horizontally, 3x12 timber sheeting is required at close spacing vertically. (See Figure N-26 for typical installation.)

(e) Example 5: A trench is dug in Type C soil, 9 feet deep and 4 feet wide. Horizontal cylinder spacing in excess of 6 feet is desired for working space. From Table N-11: Find horizontal wale with a section modulus of 7.0 and 2 inch diameter cylinders spaced at 6.5 feet o.c. horizontally. Or, find horizontal wale with a 14.0 section modulus and 3 inch diameter cylinder spaced at 10 feet o.c. horizontally. Both wales are spaced 4 feet o.c. vertically. 3x12 timber sheeting is required at close spacing vertically. (See Figure N-26 for typical installation.)

WAC 296-155-66407 (Cont.)

(7) Footnotes, and general notes, for Tables N-8 through N-11.

(a) For applications other than those listed in the tables, refer to WAC 296-155-657 (3)(b) for use of manufacturer's tabulated data. For trench depths in excess of 20 feet, refer to WAC 296-155-657 (3)(b) and (c).

(b) 2-inch diameter cylinders, at this width, shall have structural steel tube (3.5x3.5x0.1875) oversleeves, or structural oversleeves of manufacturer's specification, extending the full, collapsed length.

(c) Hydraulic cylinders capacities.

(i) 2-inch cylinders shall be a minimum 2-inch inside diameter with a safe working capacity of not less than 18,000 pounds axial compressive load at maximum extension. Maximum extension is to include full range of cylinder extensions as recommended by product manufacturer.

(ii) 3-inch cylinders shall be a minimum 3-inch inside diameter with a safe work capacity of not less than 30,000 pounds axial compressive load at maximum extension. Maximum extension is to include full range of cylinder extensions as recommended by product manufacturer.

(d) All spacing indicated is measured center to center.

(e) Vertical shoring rails shall have a minimum section modulus of 0.40 inch.

(f) When vertical shores are used, there must be a minimum of three shores spaced equally, horizontally, in a group.

(g) Plywood shall be 1.125 in. thick softwood or 0.75 inch thick, 14 ply, arctic white birch (Finland form).

Please note that plywood is not intended as a structural member, but only for prevention of local raveling (sloughing of the trench face) between shores.

(h) See appendix C for timber specifications.

(i) Wales are calculated for simple span conditions.

(j) See subsection (4) of this appendix, for basis and limitations of the data.

WAC 296-155-66407 (Cont.)

FIGURE N-19
VERTICAL ALUMINUM
HYDRAULIC SHORING
(SPOT BRACING)

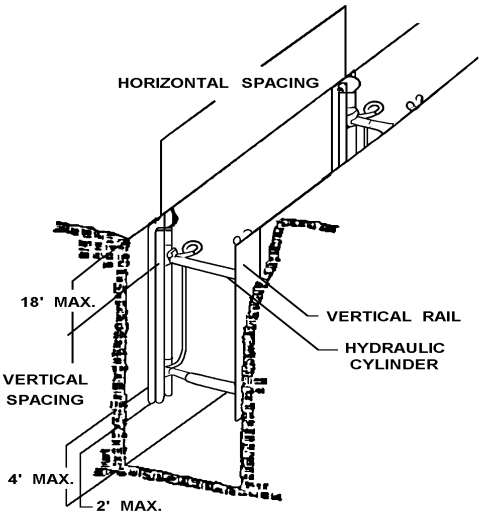

FIGURE N-20
VERTICAL ALUMINUM
HYDRAULIC SHORING
(WITH PLYWOOD)

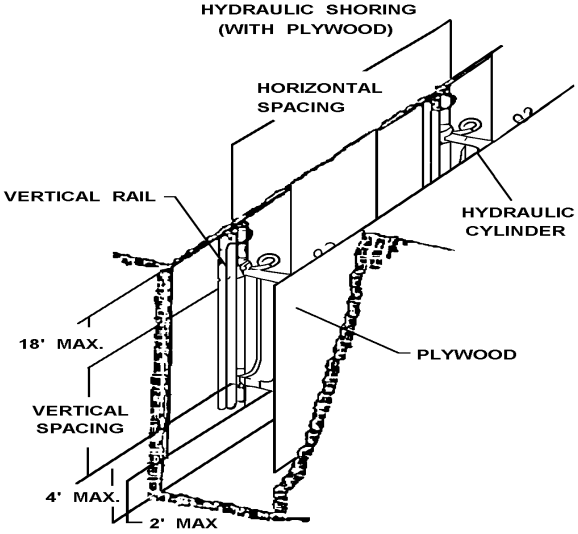

FIGURE N-21
ALUMINUM HYDRAULIC
WALER SYSTEM
(TYPICAL)

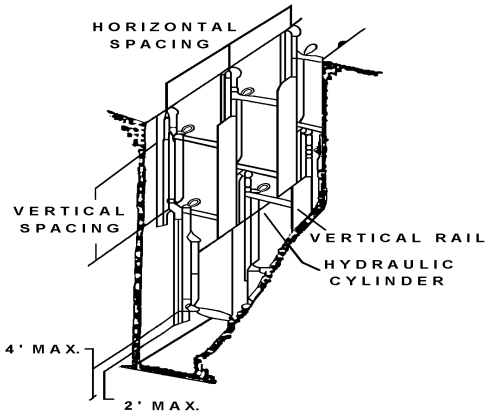

FIGURE N-22
ALUMINUM HYDRAULIC
WALER SYSTEM
(TYPICAL)

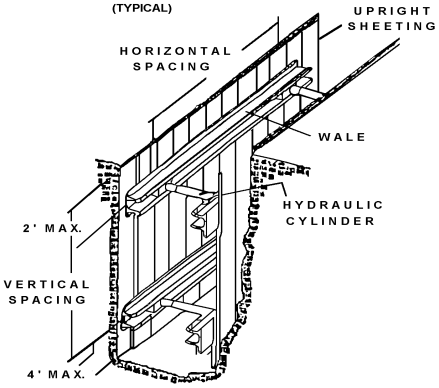

WAC 296-155-66407 (Cont.)

TABLE N-8
ALUMINUM HYDRAULIC SHORING
VERTICAL SHORES
FOR SOIL *TYPE A*

Depth of Trench (Feet)	Hydraulic Cylinders				
	Maximum Horizontal Spacing (Feet)	Maximum Vertical Spacing (Feet)	Width of Trench (Feet)		
			Up to 8	Over 8 Up to 12	Over 12 Up to 15
Over 4 Up to 10	8	4	2 INCH DIAMETER	2 INCH DIAMETER NOTE (2)	3 INCH DIAMETER
Over 10 Up to 15	8				
Over 15 Up to 20	7				
Over 20	NOTE (1)				

Footnotes to tables, and general notes on hydraulic shoring, are found in Appendix D, WAC 296-155-66407(7)
Note (1), See Appendix D, WAC 296-155-66407(7)(a)
Note (2), See Appendix D, WAC 296-155-66407(7)(b)

WAC 296-155-66407 (Cont.)

TABLE N-9
ALUMINUM HYDRAULIC SHORING
VERTICAL SHORES
FOR SOIL *TYPE B*

Depth of Trench (Feet)	Hydraulic Cylinders				
	Maximum Horizontal Spacing (Feet)	Maximum Vertical Spacing (Feet)	Width of Trench (Feet)		
			Up to 8	Over 8 Up to 12	Over 12 Up to 15
Over 4 Up to 10	8	4	2 INCH DIAMETER	2 INCH DIAMETER NOTE (2)	3 INCH DIAMETER
Over 10 Up to 15	6.5				
Over 15 Up to 20	5.5				
Over 20	NOTE (1)				

Footnotes to tables, and general notes on hydraulic shoring, are found in Appendix D, WAC 296-155-66407(7)
Note (1), See Appendix D, WAC 296-155-66407(7)(a)
Note (2), See Appendix D, WAC 296-155-66407(7)(b)

WAC 296-155-66407 (Cont.)

TABLE N-10
ALUMINUM HYDRAULIC SHORING
WALER SYSTEMS
FOR SOIL *TYPE B*

Depth of Trench (Feet)	Wales		Hydraulic Cylinders						Timber Uprights		
			Width of Trench (Feet)						Max. Horizontal Spacing (on Center)		
	Vertical Spacing (Feet)	Section* Modulus (In^3)	Up to 8		Over 8 Up to 12		Over 12 Up to 15		Solid Sheet	2 Feet	3 Feet
			Horiz. Spacing	Cylinder Diameter	Horiz. Spacing	Cylinder Diameter	Horiz. Spacing	Cylinder Diameter			
Over 4 Up to 10	4	3.5	8.0	2 IN	8.0	2 IN Note (2)	8.0	3 IN	—	—	3 X 12
		7.0	9.0	2 IN	9.0	2 IN Note (2)	9.0	3 IN			
		14.0	12.0	3 IN	12.0	3 IN	12.0	3 IN			
Over 10 Up to 15	4	3.5	6.0	2 IN	6.0	2 IN Note (2)	6.0	3 IN	—	3 X 12	—
		7.0	8.0	3 IN	8.0	3 IN	8.0	3 IN			
		14.0	10.0	3 IN	10.0	3 IN	10.0	3 IN			
Over 15 Up to 20	4	3.5	5.5	2 IN	5.5	2 IN Note (2)	5.5	3 IN	3 X 12	—	—
		7.0	6.0	3 IN	6.0	3 IN	6.0	3 IN			
		14.0	9.0	3 IN	9.0	3 IN	9.0	3 IN			
Over 20	NOTE (1)										

Footnotes to tables, and general notes on hydraulic shoring, are found in Appendix D, WAC 296-155-66407(7)
Note (1), See Appendix D, WAC 296-155-66407(7)(a)
Note (2), See Appendix D, WAC 296-155-66407(7)(b)
***Consult product manufacturer and/or qualified engineer for Section Modulus of available wales.**

WAC 296-155-66407 (Cont.)

TABLE N-11
ALUMINUM HYDRAULIC SHORING
WALER SYSTEMS
FOR SOIL *TYPE C*

Depth of Trench (Feet)	Wales		Hydraulic Cylinders						Timber Uprights		
			Width of Trench (Feet)						Max. Horizontal Spacing (on Center)		
			Up to 8		Over 8 Up to 12		Over 12 Up to 15				
	Vertical Spacing (Feet)	Section* Modulus (In^3)	Horiz. Spacing	Cylinder Diameter	Horiz. Spacing	Cylinder Diameter	Horiz. Spacing	Cylinder Diameter	Solid Sheet	2 Feet	3 Feet
Over 4 Up to 10	4	3.5	6.0	2 IN	6.0	2 IN Note (2)	6.0	3 IN	3 X 12	—	—
		7.0	6.5	2 IN	6.5	2 IN Note (2)	6.5	3 IN			
		14.0	10.0	3 IN	10.0	3 IN	10.0	3 IN			
Over 10 Up to 15	4	3.5	4.0	2 IN	4.0	2 IN Note (2)	4.0	3 IN	3 X 12	—	—
		7.0	5.5	3 IN	5.5	3 IN	5.5	3 IN			
		14.0	8.0	3 IN	8.0	3 IN	8.0	3 IN			
Over 15 Up to 20	4	3.5	3.5	2 IN	3.5	2 IN Note (2)	3.5	3 IN	3 X 12	—	—
		7.0	5.0	3 IN	5.0	3 IN	5.0	3 IN			
		14.0	6.0	3 IN	6.0	3 IN	6.0	3 IN			
Over 20	NOTE (1)										

Footnotes to tables, and general notes on hydraulic shoring, are found in Appendix D, WAC 296-155-66407(7)
Note (1), See Appendix D, WAC 296-155-66407(7)(a)
Note (2), See Appendix D, WAC 296-155-66407(7)(b)
***Consult product manufacturer and/or qualified engineer for Section Modulus of available wales.**

[Statutory Authority: Chapter 49.17 RCW and RCW 49.17.040, [49.17].050 and [49.17].060. 92-22-067 (Order 92-06), § 296-155-66407, filed 10/30/92, effective 12/8/92.]

WAC 296-155-66409 Appendix E-Alternatives to timber shoring.

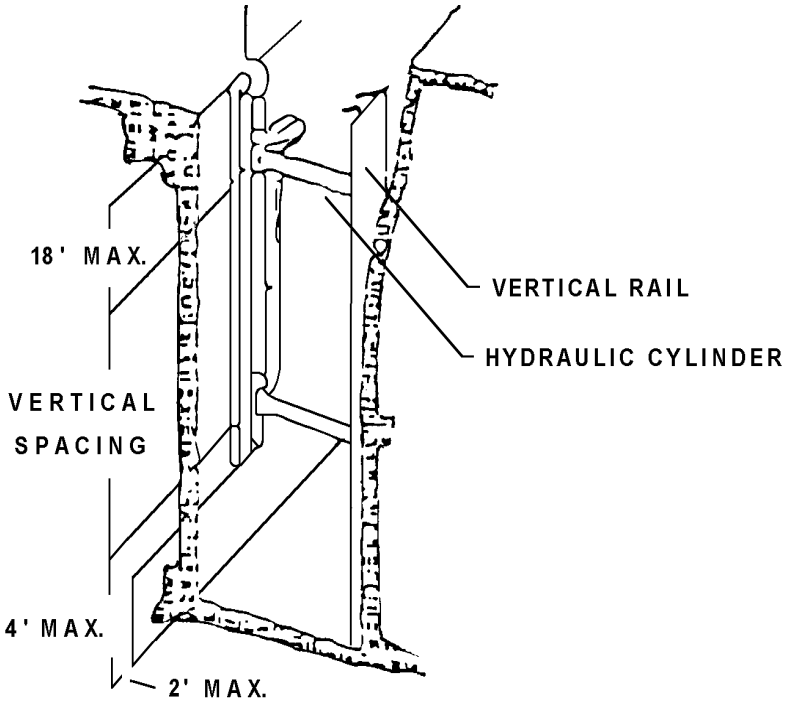

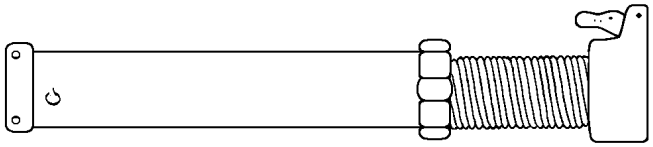

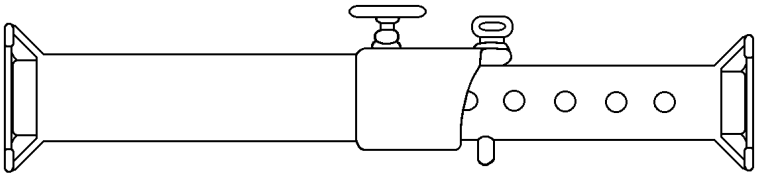

WAC 296-155-66409 Appendix E-Alternatives to timber shoring.

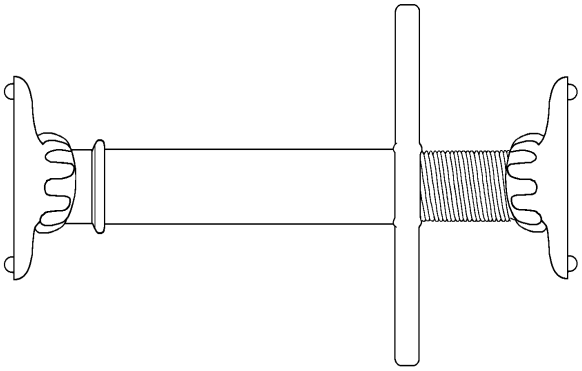

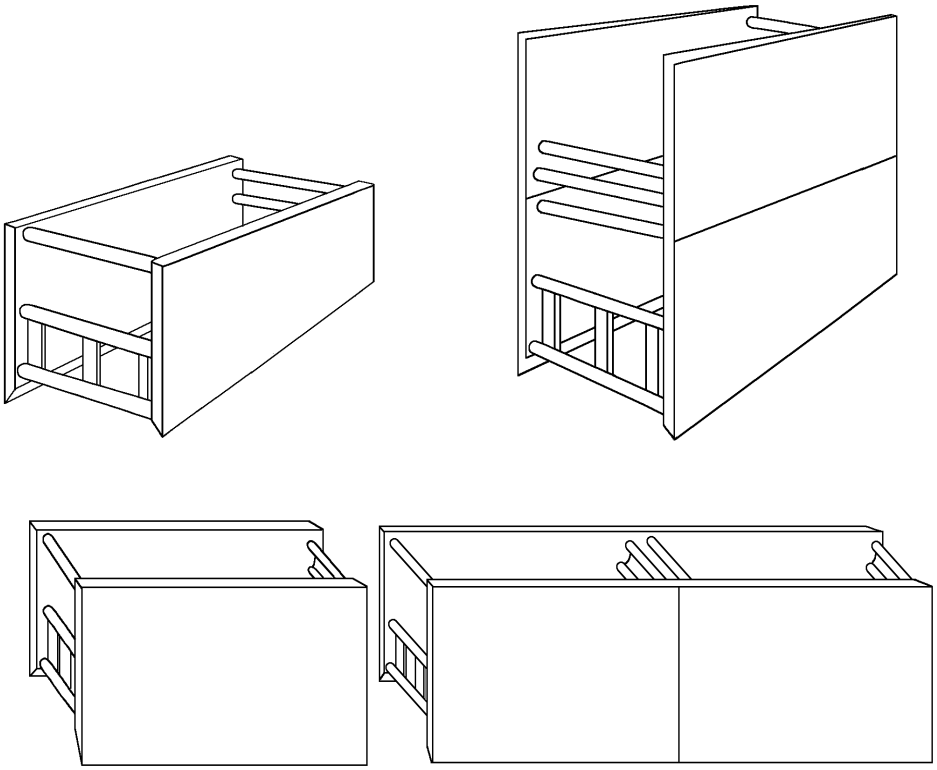

[Statutory Authority: Chapter 49.17 RCW and RCW 49.17.040, [49.17].050 and [49.17].060. 92-22-067 (Order 92-06), § 296-155-66409, filed 10/30/92, effective 12/8/92.]

WAC 296-155-66411 Appendix F-Selection of protective systems. The following figures are a graphic summary of the requirements contained in Part N for excavations 20 feet or less in depth. Protective systems for use in excavations more than 20 feet in depth must be designed by a registered professional engineer in accordance with WAC 296-155-657 (2) and (3).

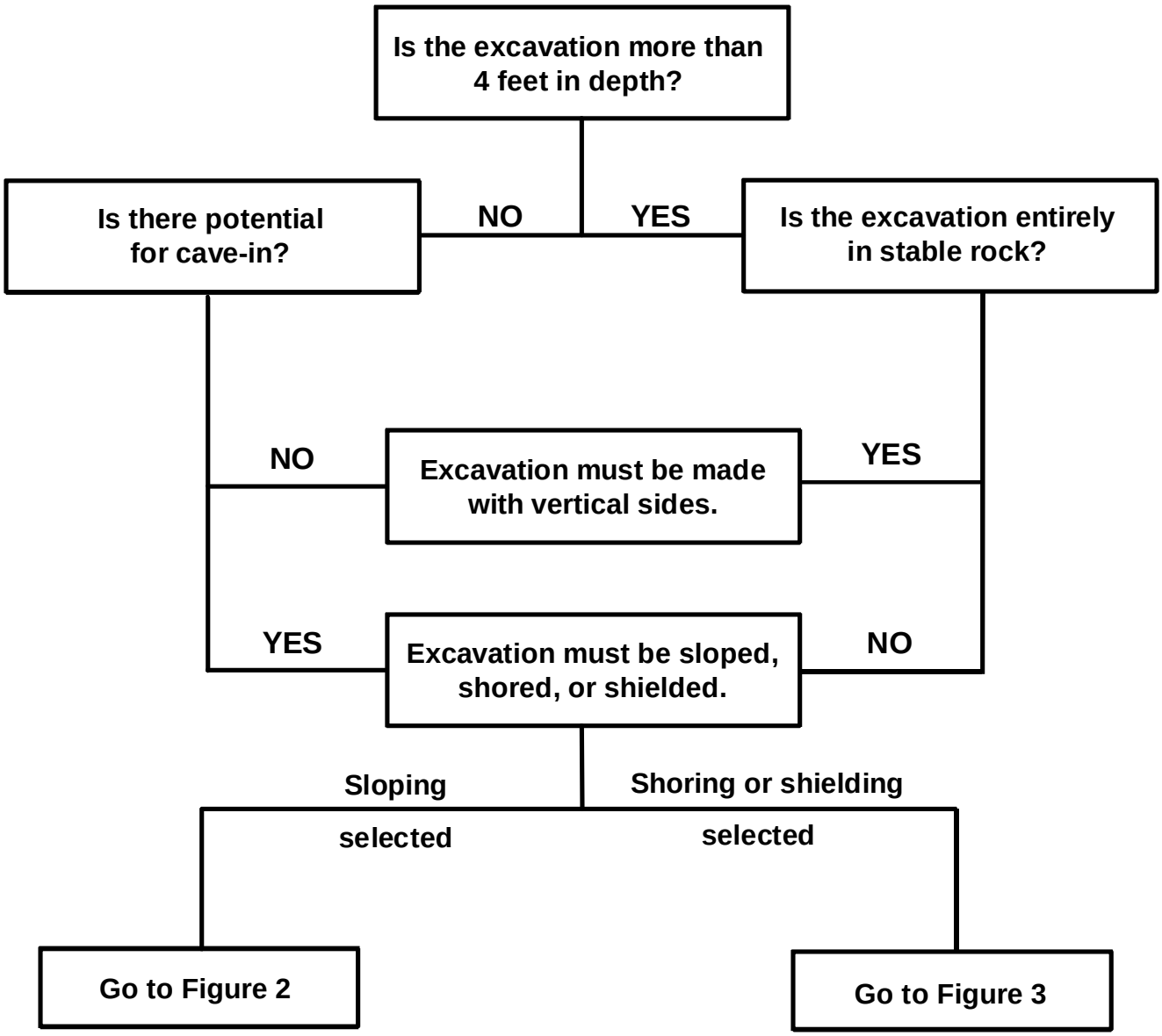

FIGURE N-27 - PRELIMINARY DECISIONS

WAC 296-155-66411 (Cont.)

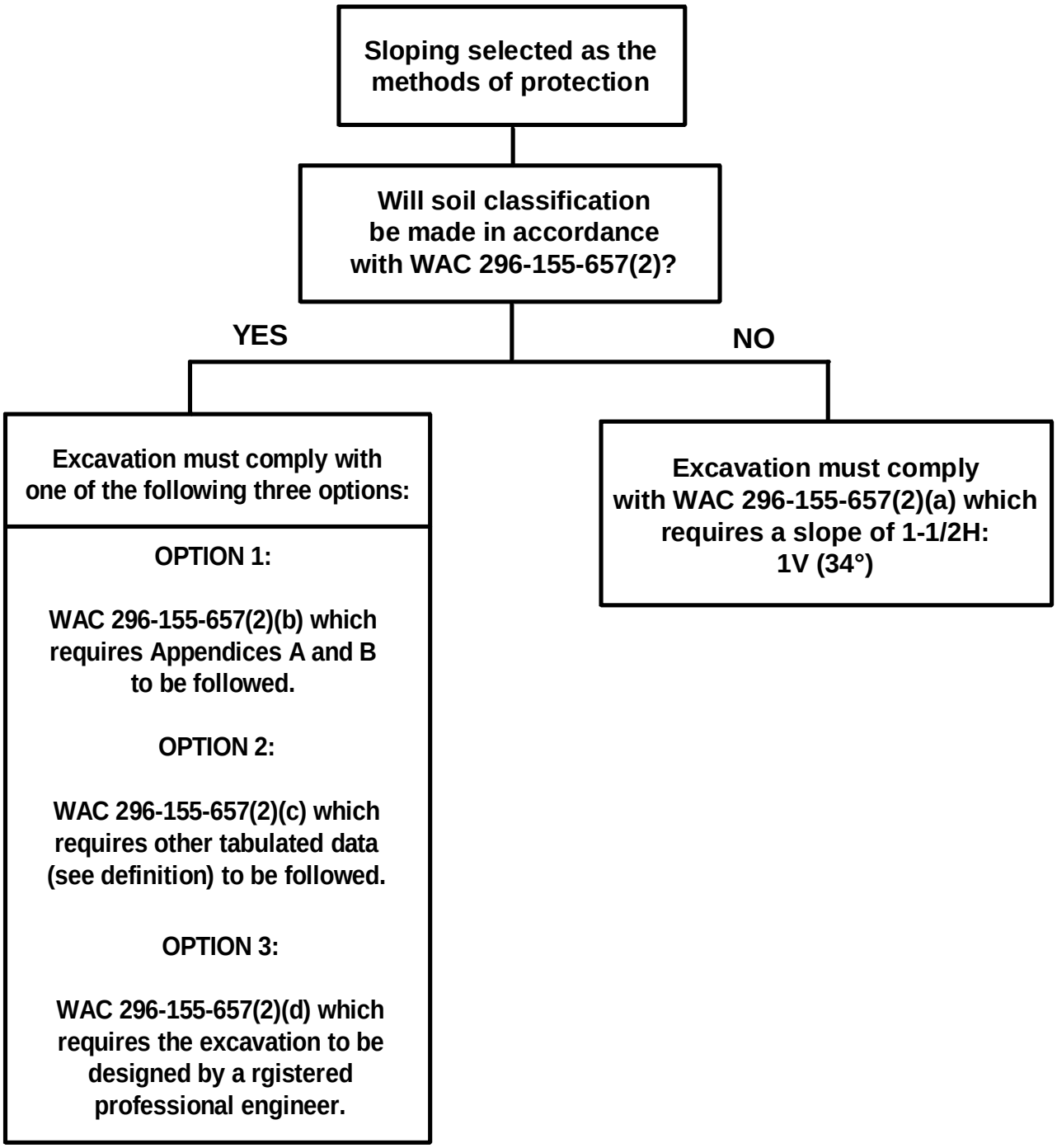

FIGURE N-28 - SLOPING OPTIONS

WAC 296-155-66411 (Cont.)

Shoring or shielding selected as the method of protection.

Soil classification is required when shoring or shielding is used. The excavation must comply with one of the following four options:

OPTION 1:

WAC 296-155-657(3)(a) which requires Appendices A and C to be followed (e.g., timber shoring)

OPTION 2:

WAC 296-155-657(3)(b) which requires manufacturers data to be followed (e.g., hydraulic shoring, trench jacks, air shores, shields)

OPTION 3:

WAC 296-155-657(3)(c) which requires tabulated data (see definition) to be followed (e.g., any system as per the tabulated data).

OPTION 4:

WAC 296-155-657(3)(d) which requires the excavation to be designed by a registered professional engineer (e.g., any designed system).

FIGURE N-29 - SHORING AND SHIELDING OPTIONS

[Statutory Authority: Chapter 49.17 RCW and RCW 49.17.040, [49.17].050 and [49.17].060. 92-22-067 (Order 92-06), § 296-155-66411, filed 10/30/92, effective 12/8/92.]

PART O
CONCRETE, CONCRETE FORMS, SHORING, AND MASONRY CONSTRUCTION

WAC 296-155-675 Scope, application, and definitions applicable to this part.

(1) Scope and application. This part sets forth requirements to protect all construction employees from the hazards associated with concrete and masonry construction operations performed in workplaces covered under chapter 296-155 WAC.

(2) Definitions applicable to this part.

(a) **"Bull float"** means a tool used to spread out and smooth the concrete.

(b) **"Formwork"** means the total system of support for freshly placed or partially cured concrete, including the mold or sheeting (form) that is in contact with the concrete as well as all supporting members including shores, reshores, hardware, braces, and related hardware.

(c) **"Jacking operation"** means the task of lifting a slab (or group of slabs) vertically from one location to another (e.g., from the casting location to a temporary (parked) location, or from a temporary location to another temporary location, or to its final location in the structure), during the construction of a building/structure where the lift-slab process is being used.

(d) **"Lift slab"** means a method of concrete construction in which floor and roof slabs are cast on or at ground level and, using jacks, lifted into position.

(e) **"Limited access zone"** means an area alongside a masonry wall, which is under construction, and which is clearly demarcated to limit access by employees.

(f) **"Precast concrete"** means concrete members (such as walls, panels, slabs, columns, and beams) which have been formed, cast, and cured prior to final placement in a structure.

(g) **"Reshoring"** means the construction operation in which shoring equipment (also called reshores or reshoring equipment) is placed, as the original forms and shores are removed, in order to support partially cured concrete and construction loads.

(h) **"Shore"** means a supporting member that resists a compressive force imposed by a load.

(i) **"Vertical slip forms"** means forms which are jacked vertically during the placement of concrete.

(j) **"Guy"** means a line that steadies a high piece or structure by pulling against an off-center load.

[Statutory Authority: Chapter 49.17 RCW. 94-15-096 (Order 94-07), § 296-155-675, filed 7/20/94, effective 9/20/94; 91-11-070 (Order 91-01), § 296-155-675, filed 5/20/91, effective 6/20/91; 90-03-029 (Order 89-20), § 296-155-675, filed 1/11/90, effective 2/26/90; 89-11-035 (Order 89-03), § 296-155-675, filed 5/15/89, effective 6/30/89; Order 74-26, § 296-155-675, filed 5/7/74, effective 6/6/74.]

WAC 296-155-680 General provisions.

(1) General. All equipment, material and construction techniques used in concrete construction and masonry work shall meet the applicable requirements for design, construction, inspection, testing, maintenance and operations as prescribed in ANSI A10.9-1970, Safety Requirements for Concrete Construction and Masonry Work.

WAC 296-155-680 (Cont.)

(2) Construction loads. No construction loads shall be placed on a concrete structure or portion of a concrete structure unless the employer determines, based on information received from a person who is qualified in structural design, that the structure or portion of the structure is capable of supporting the loads.

(3) Vertical loads. Vertical loads consist of a dead load plus an allowance for live load. The weight of formwork together with the weight of freshly placed concrete is dead load. The live load consists of the weight of workers, equipment, runways and impact, and shall be computed in pounds per square foot (psf) of horizontal projection.

(4) Lateral loads. Braces and shores shall be designed to resist all foreseeable lateral loads such as wind, cable tensions, inclined supports, impact of placement, and starting and stopping of equipment. The assumed value of load due to wind, impact of concrete, and equipment acting in any direction at each floor line shall not be less than one hundred pounds per lineal foot of floor edge or two percent of total dead load of the floor, whichever is greater. Wall forms shall be designed for a minimum wind load of ten psf, and bracing for wall forms should be designed for a lateral load of at least one hundred pounds per lineal foot of wall, applied at the top. Walls of unusual height require special consideration.

(5) Special loads. Formwork shall be designed for all special conditions of construction likely to occur, such as unsymmetrical placement of concrete, impact of machine-delivered concrete, uplift, and concentrated loads.

(6) Form supports and wedges shall be checked during concrete placement to prevent distortion or failure.

(7) Reinforcing steel.

(a) All protruding reinforcing steel, onto and into which employees could fall, shall be guarded to eliminate the hazard of impalement.

(b) Wire mesh rolls: Wire mesh rolls shall be secured at each end to prevent dangerous recoiling action.

(c) Guying: Reinforcing steel for walls, piers, columns, and similar vertical structures shall be guyed and supported to prevent overturning and to prevent collapse.

(8) Post-tensioning operations.

(a) No employee (except those essential to the post-tensioning operations) shall be permitted to be behind the jack during tensioning operations.

(b) Signs and barriers shall be erected to limit employee access to the post-tensioning area during tensioning operations.

(9) Working under loads.

(a) No employee shall be permitted to work under concrete buckets while buckets are being elevated or lowered into position.

(b) To the extent practical, elevated concrete buckets shall be routed so that no employee, or the fewest number of employees, are exposed to the hazards associated with falling concrete buckets.

WAC 296-155-680 (Cont.)

(10) Personal protective equipment.

(a) No employee shall be permitted to apply a cement, sand, and water mixture through a pneumatic hose unless the employee is wearing protective head and face equipment.

(b) No employee shall be permitted to place or tie reinforcing steel more than six feet (1.8 m) above any adjacent working surface unless the employee is protected by personal fall arrest systems, safety net systems, or positioning device systems meeting the criteria of chapter 296-155 WAC, Part C-1.

(c) Each employee on the face of formwork or reinforcing steel shall be protected from falling 6 feet (1.8m) or more to lower levels by personal fall arrest systems, safety net systems, or positioning device systems meeting the criteria of chapter 296-155 WAC, Part C-1.

[Statutory Authority: RCW 49.17.010, .040, .050. 00-14-058 (Order 99-43), § 296-155-680, filed 07/03/2000, effective 10/01/2000. Statutory Authority: Chapter 49.17 RCW. 94-15-096 (Order 94-07), § 296-155-680, filed 7/20/94, effective 9/20/94; 90-17-051 (Order 90-10), § 296-155-680, filed 8/13/90, effective 9/24/90; 90-03-029 (Order 89-20), § 296-155-680, filed 1/11/90, effective 2/26/90; 89-11-035 (Order 89-03), § 296-155-680, filed 5/15/89, effective 6/30/89. Statutory Authority: RCW 49.17.040 and 49.17.050. 86-03-074 (Order 86-14), § 296-155-680, filed 1/21/86; Order 74-26, § 296-155-680, filed 5/7/74, effective 6/6/74.]

WAC 296-155-681 Safe walking surfaces on concrete structural members. Structural members with studs, dowels, or shear connectors installed on the top side shall not be used as a walkway and/or means of access unless such studs, dowels, or shear connectors are covered with suitable material and in such a manner as to provide a walking surface at least as stable and free of hazards as the top surface of the member would provide without attachments installed.

*Note: For the purpose of this section, **"stud"** means all protruding metal attachments to structural members.*
[Statutory Authority: Chapter 49.17 RCW. 89-11-035 (Order 89-03), § 296-155-681, filed 5/15/89, effective 6/30/89.]

WAC 296-155-682 Requirements for equipment and tools.

(1) Bulk cement storage. Bulk storage bins, containers, and silos shall be equipped with the following:

(a) Conical or tapered bottoms; and

(b) Mechanical or pneumatic means of starting the flow of material.

(2) No employee shall be permitted to enter storage facilities unless the ejection system has been shut down and locked out in accordance with WAC 296-155-429.

(3) Safety belts, harnesses, lanyards, lifelines or droplines, independently attached or attended, shall be used as prescribed in chapter 296-155 WAC, Part C-1.

(4) Concrete mixers. Concrete mixers with one cubic yard (.8 m3) or larger loading skips shall be equipped with the following:

(a) A mechanical device to clear the skip of materials; and

(b) Guardrails installed on each side of the skip.

(5) Power concrete trowels. Powered and rotating type concrete troweling machines that are manually guided shall be equipped with a control switch that will automatically shut off the power whenever the hands of the operator are removed from the equipment handles.

(6) Concrete buggies. Concrete buggy handles shall not extend beyond the wheels on either side of the buggy.

WAC 296-155-682 (Cont.)

Note: Installation of knuckle guards on buggy handles is recommended.

(7) Runways.

(a) Runways shall be constructed to carry the maximum contemplated load with a safety factor of four, have a smooth running surface, and be of sufficient width for two buggies to pass. Single runs to have a minimum width of forty-two inches with turnouts. Runways to have standard railings. Where motor driven concrete buggies are used, a minimum four-inches by four-inches wheel guard shall be securely fastened to outside edge of runways.

(b) All concrete buggy runways which are 12 inches or more above a work surface or floor, or ramps with more than 4 percent incline shall be considered "elevated" runways.

Exception: Small jobs utilizing only one concrete buggy, or larger jobs utilizing a "one-way traffic pattern" may be exempt from the requirements for "turnouts" or for" sufficient width for two buggies to pass."

Exemption: Runways less than 12 inches above the floor or ground which are utilized by hard-powered buggies only, may be exempt from the requirements for guardrails and wheelguards.

(8) Concrete pumps and placing booms.

(a) Definitions.

"Concrete delivery hose" means a flexible concrete delivery hose which has two end couplings.

"Concrete pump" means a construction machine that pumps concrete.

"Controls" means the devices used to operate a machine.

"Delivery systems" means the pipe, hoses and components, through which the concrete is pumped.

"Grooved end" means a pipe clamp pipe connection where a groove is machined or rolled directly into the outside of the pipe wall (for example: Victualic).

"Material pressure" means the pressure exerted on the concrete inside the delivery system.

"Placing boom and placing unit" means a manual or power driven, slewable working device which:

- Consists of one or more extendable or folding parts for supporting the concrete delivery system, and directs the discharge into the desired location; and
- May be mounted on trucks, trailers, or special vehicles.

"Qualified person" means someone who:

- Possesses a recognized degree or certificate of professional standing; or
- Has extensive knowledge, training, and experience; or
- Successfully demonstrated the ability to resolve problems relating to the work.

WAC 296-155-682 (Cont.)

"Restraining devices" means a sling, cable, or equivalent device used to minimize excess movement of a delivery system in case of separation.

"Whip hoses" means a suspended hose that has only one coupling and is used to direct the delivery of concrete.

(b) Equipment requirements.

(i) Equipment identification tag.

The employer must ensure the following identification is furnished if originally identified by the manufacturer and on all pumps manufactured after January 1, 1998:

- The manufacturer's name;
- The year of manufacture;
- The model and serial number;
- The maximum material pressure;
- The maximum allowable pressure in the hydraulic system; and
- The maximum weight per foot of delivery system including concrete.

(ii) Manufacturer's manual.

The employer must have the manufacturer's operation/safety manual or equivalent available for each concrete pump or placing boom.

(iii) Unsafe condition of equipment.

If during an equipment inspection a condition is revealed that might endanger workers, the equipment must not be returned to service until the condition is corrected.

(iv) Controls.

Controls must have their function clearly marked.

(v) Hydraulic systems.

(A) Concrete pumps and placing booms hydraulic systems must have pressure relief valves to prevent cylinder and boom damage.

(B) Hydraulic systems must have hydraulic holding valves if hose or coupling failure could result in uncontrolled vertical movement

(iv) Certification.

In the event of failure of a structural member, overloading, or contact with energized electric power lines and before return to service, the equipment must be certified safe by:

- The manufacturer; or
- An agent of the manufacturer; or
- A professional engineer.

WAC 296-155-682 (Cont.)

(vii) Marking weight. A permanent, legible notice stating the total weight of the unit must be marked on:

- Trailer or skid mounted concrete pumps;
- Placing booms; and
- All major detachable components over five hundred pounds.

(viii) Lifting a pump.

A concrete pump must be lifted using the lift points specified by the manufacturer or a professional engineer.

(ix) Emergency shutoff.

A concrete pump must have a clearly labeled emergency stop switch that stops the pumping action.

(x) Inlet and outlet guarding.

(A) The waterbox must have a fixed guard to prevent unintentional access to the moving parts.

(B) The agitator must be guarded with a point of operation guard in accordance with WAC 296-24-19507, Table 0-10, and the guard must be:

- Hinged or bolted in place;
- At least three inches distance from the agitator;
- Be capable of supporting a load of two hundred fifty pounds.

(C) A person must not stand on the guard when the pump or agitator is running.

(xi) Outriggers.

(A) Outriggers must be used in accordance with the manufacturer's specifications.

(B) Concrete pump trucks manufactured after January 1, 1998, must have outriggers or jacks permanently marked to indicate the maximum loading they transmit to the ground.

(xii) Load on a placing boom.

(A) The manufacturer's or a licensed, registered, structural engineer's specifications for the placing boom must not be exceeded by:

- The weight of the load;
- The length and diameter of suspended hose;
- The diameter and weight of mounted pipe.

(B) A concrete placing boom must not be used to drag hoses or lift other loads.

(C) All engineering calculations regarding modifications must be:

WAC 296-155-682 (Cont.)

- Documented;
- Recorded; and
- Available upon request.

(xiii) Pipe diameter thickness. The pipe wall thickness must be measured in accordance with the manufacturer's instruction, and:

- Be sufficient to maintain a burst pressure greater than the maximum pressure the pump can produce;
- The pipe sections must be replaced when measurements indicate wall thickness has been reduced to the limits specified by the manufacturer.

(xiv) Pipe clamps.

(A) Concrete must not be pumped through a delivery system with grooved ends, such as those for Victualic-type couplers.

(B) Pipe clamps must have a pressure rating at least equal to the pump pressure rating.

(C) Pipe clamps contact surfaces must be free of concrete and other foreign matter.

(D) If quick connect clamps are used, they must be pinned or secured to keep them from opening when used in a vertical application.

(xv) Delivery pipe.

(A) A delivery pipe between the concrete pump and the placing system must be supported and anchored to prevent movement and excessive loading on clamps.

(B) Double ended hoses must not be used as whip hoses.

(C) Attachments must not be placed on whip hoses (i.e., "S" hooks, valves, etc.).

Table 1. Nonmandatory recommended maximum yards per hour through hose

Hose Diameter	Hose Length (12' and less) Max. yards per hour	Hose Length (12' and longer) Max. yards per hour
2"	30	30
3"	90	50
4"	160	110
5"	See Manufacturer specs	See manufacturer specs

- The above figures are based on a minimum of a 4" slump and a 5 sack mix.
- Variables in mix design can have an effect on these ratings.
- Aggregate should not exceed 1/3 the diameter on these delivery system.

(xvi) Restraining. A restraining device must:

WAC 296-155-682 (Cont.)

- Be used on attachments suspended from the boom tips; and
- Have a load rating not less than one-fifth of its ultimate breaking strength.

(xvii) Equipment inspection.

(A) An inspection must be conducted annually for the first five years and semiannually thereafter and must include the following:

- Nondestructive testing of all sections of the boom by a method capable of ensuring the structural integrity of the boom;
- Be conducted by a qualified person or by a private agency.

(B) The inspection report must be documented and a copy maintained by the employer and in each unit inspected. It must contain the following:

- The identification, including the serial numbers and manufacturer's name, of the components and parts inspected and tested;
- A description of the test methods and results;
- The names and qualifications of the people performing the inspection;
- A listing of necessary repairs; and
- The signature of the manufacturer, an agent of the manufacturer, or a qualified person.

Note: See WAC 296-155-628(8)(d) for the inspection worksheet criteria.

(xviii) Equipment repair.

(A) Replacement parts must meet or exceed the original manufacturer's specifications or be certified by a registered professional structural engineer.

(B) A properly certified welder must perform any welding on the boom, outrigger, or structural component.

(xix) Compressed air cleaning of the piping system. To clean the piping system:

(A) The pipe system must be securely anchored before it is cleaned out.

(B) The flexible discharge hose must be removed.

(C) Workers not essential to the cleaning process must leave the vicinity.

(D) The compressed air system must have a shutoff valve.

(E) Blow out caps must have a bleeder valve to relieve air pressure.

(F) A trap basket or containment device (i.e., concrete truck, concrete bucket) must be available and secured to receive the clean out device.

(G) Delivery pipes must be depressurized before clamps and fittings are released.

WAC 296-155-682 (Cont.)

(c) Qualifications and training requirements.

(i) Operator trainee-Qualification requirements. To be qualified to become a concrete pump operator, the trainee must meet the following requirements unless it can be shown that failure to meet the requirements will not affect the operation of the concrete pump boom.

(A) Vision requirements:

- At least 20/30 Snellen in one eye and 20/50 in the other. Corrective lenses may be used to fulfill this requirement;
- Ability to distinguish colors, regardless of position, if color differentiation is required;
- Normal depth perception and field of vision.

(B) Hearing requirements. Hearing adequate to meet operational demands. Corrective devices may be used to fulfill this requirement.

(ii) Operator trainee-Training requirements. Operator trainee training requirements include, but are not limited to, the following:

(A) Demonstrated their ability to read and comprehend the pump manufacturer's operation and safety manual.

(B) Be of legal age to perform the duties required.

(C) Received documented classroom training and testing (as applicable) on these recommended subjects:

- Driving, operating, cleaning and maintaining concrete pumps, placing booms, and related equipment;
- Jib/boom extensions;
- Boom length/angle;
- Manufacturer's variances;
- Radii;
- Range diagram, stability, tipping axis; and
- Structural/tipping determinations.

(D) Maintain and have available upon request a copy of all training materials and a record of training.

(E) Satisfactorily complete a written examination for the concrete pump boom for which they are becoming qualified. It will cover:

- Safety;
- Operational characteristics and limitations; and
- Controls.

(iii) Operator-Qualifications requirements. Operators will be considered qualified when they have:

WAC 296-155-682 (Cont.)

(A) Completed the operator trainee requirements listed in (c)(i) and (ii) of this subsection.

(B) Completed a program of training conducted by a qualified person, including practical experience under the direct supervision of a qualified person.

(C) Passed a practical operating examination of their ability to operate a specific model and type of equipment. Possess the knowledge and the ability to implement emergency procedures.

(D) Possess the knowledge regarding the restart procedure after emergency stop has been activated.

(E) Possess the proper class of driver's license to drive the concrete pump truck.

(F) Demonstrate the ability to comprehend and interpret all labels, safety decals, operator's manuals, and other information required to safely operate the concrete pump.

(G) Be familiar with the applicable safety requirements.

(H) Understand the responsibility for equipment maintenance.

(d) Concrete pump inspection worksheet criteria. Concrete pump trucks will be inspected using the following criteria: The manufacturer's required inspection criteria will be followed in all instances.

Note: DOT requirements for inspections-Ref. 49 C.F.R. 396.11, Driver Vehicle Inspections and 396.13, Driver Pre-Trip Inspections; and WAC 296-155-610.

(i) Hydraulic systems.

(A) Oil level;

(B) Hoses;

(C) Fittings;

(D) Holding valves;

(E) Pressure settings;

(F) Hydraulic cylinders;

(G) Ensure that the emergency stop system is functioning properly;

(H) All controls clearly marked.

WAC 296-155-682 (Cont.)

(ii) Electrical.

(A) All systems functioning properly.

(B) All remote control functions are operating properly. Ensure that the emergency stop system is functioning properly.

(C) All controls clearly marked.

(iii) Structural.

(A) Visual inspection for cracks, corrosion, and deformations of the concrete pump with placing boom structure, and all load carrying components such as outriggers, cross frames, torsion box beams, and delivery line support structures that may lead to nondestructive testing.

(B) Visual examination of all links, pivots, pins, and bolts.

(C) Vertical and horizontal movement at the turret, turntable, rotation gear lash, bearing tolerances, not to exceed manufacturer's specifications.

(iv) Piping systems.

(A) Wall thickness must not exceed original manufacturer's specifications.

(B) Mounting hardware for attaching delivery system.

(C) Correct clamps and safety pins.

(v) Safety decals.

All safety decals shall be in place as required by the manufacturer.

(9) Concrete buckets.

(a) Concrete buckets equipped with hydraulic or pneumatic gates shall have positive safety latches or similar safety devices installed to prevent premature or accidental dumping.

(b) Concrete buckets shall be designed to prevent concrete from hanging up on top and the sides.

(c) Riding of concrete buckets for any purpose shall be prohibited, and vibrator crews shall be kept out from under concrete buckets suspended from cranes or cableways.

(d) When discharging on a slope, the wheels of ready-mix trucks shall be blocked and the brakes set to prevent movement.

(10) Tremies. Sections of tremies and similar concrete conveyances shall be secured with wire rope (or equivalent materials in addition to the regular couplings or connections).

WAC 296-155-682 (Cont.)

(11) Bull floats. Bull float handles, used where they might contact energized electrical conductors, shall be constructed of nonconductive material or insulated with a nonconductive sheath whose electrical and mechanical characteristics provide the equivalent protection of a handle constructed of nonconductive material.

(12) Masonry saws shall be constructed, guarded, and operated in accordance with WAC 296-155-367 (1) through (4).

(13) Lockout/tagout procedures. No employee shall be permitted to perform maintenance or repair activity on equipment (such as compressors, mixers, screens, or pumps used for concrete and masonry construction activities) where the inadvertent operation of the equipment could occur and cause injury, unless all potentially hazardous energy sources have been locked out and tagged in accordance with chapter 296-155 WAC, Part I.

[Statutory Authority: RCW 49.17.010, .040, .050. 00-21-102 (Order 99-09), § 296-155-682, filed 10/18/00, effective 02/01/01. Statutory Authority: Chapter 49.17 RCW. 95-10-016, § 296-155-682, filed 4/25/95, effective 10/1/95; 94-15-096 (Order 94-07), § 296-155-682, filed 7/20/94, effective 9/20/94; 91-03-044 (Order 90-18), § 296-155-682, filed 1/10/91, effective 2/12/91; 90-17-051 (Order 90-10), § 296-155-682, filed 8/13/90, effective 9/24/90; 89-11-035 (Order 89-03), § 296-155-682, filed 5/15/89, effective 6/30/89.]

WAC 296-155-683 Concrete finishing.

(1) Scaffolds for use of cement finishers shall comply with the requirements of chapter 296-155 WAC, Part J-1, Scaffolds

(2) Where grinders, chippers, and other equipment is used which creates a thrust force while working on scaffolding, such scaffold shall be securely tied to a structure or held in with weighted drop lines.

(3) Grinding and dressing operations carried on within closed rooms, stairwells, elevator shafts, etc., shall be provided with forced air ventilation.

(4) Grinding machine operators shall wear respirators whenever machines are in operation or where dust hazard exists.

(5) Eye protection shall be worn by workers engaged in grinding, chipping, or sacking concrete as required by WAC 296-155-215.

[Statutory Authority: Chapter 49.17.010, .040, .050, .060 RCW. 98-05-046 (Order 97-10), § 296-155-688, filed 2/13/98, effective 4/15/98. Statutory Authority: Chapter 49.17 RCW. 89-11-035 (Order 89-03), § 296-155-683, filed 5/15/89, effective 6/30/89.]

WAC 296-155-684 Requirements for cast in place concrete.

(1) General requirements for formwork.

(a) Formwork shall be designed, fabricated, erected, supported, braced, and maintained so that it will be capable of supporting without failure all vertical and lateral loads that may reasonably be anticipated to be applied to the formwork. Formwork which is designed, fabricated, erected, supported, braced, and maintained in conformance with the Appendix to this section will be deemed to meet the requirements of this subdivision.

(b) Any form, regardless of size, shall be planned in every particular and designed and constructed with an adequate factor of safety. In addition to computable loading, additional form pressures may result from impact during concrete placement, sudden lowering of temperatures retarding the set and increasing the liquid head or static pressure, vibrations of the form or concrete, uneven

WAC 296-155-684 (Cont.)

stressing resulting from failure or weakening of form members, or impact from concrete buckets or placing equipment. As a result, an adequate factor of safety is required to offset these unpredictable conditions.

(c) The thoroughness of planning and design shall be governed by the size, complexity, and intended use of the form. Formwork which is complex in nature or which will be subjected to unusually high concrete pressures shall be designed or approved for use by an engineer or experienced form designer.

(2) Drawings or plans, including all revisions, for the jack layout, formwork (including shoring equipment), working decks, and scaffolds, shall be available at the jobsite.

(3) Shoring and reshoring.

(a) General: Shoring installations constructed in accordance with this standard shall be designed in accordance with American National Standard Recommended Practice for Concrete Formwork, ANSI-(ACI 347-78), Formwork for Concrete ACI 318-83, or with the following publications of the Scaffolding & Shoring Institute: Recommended Standard Safety Code for Vertical Shoring, 1970; Single Post Shore Safety Rules, 1969; and Steel Frame Shoring Safety, Safety Rules, 1969.

(b) All shoring equipment shall be inspected prior to erection to determine that it is as specified in the shoring layout.

(c) A shoring layout shall be prepared or approved by a person qualified to analyze the loadings and stresses which are induced during the construction process.

(d) A copy of the shoring layout shall be available at the jobsite.

(e) The shoring layout shall include all details of the specification, including unusual conditions such as heavy beams, sloping areas, ramps, and cantilevered slabs, as well as plan and elevation views.

(f) Shoring equipment found to be damaged such that its strength is reduced to less than that required by WAC 296-155-684 (1)(a) shall not be used for shoring.

(g) Erected shoring equipment shall be inspected immediately prior to, during, and immediately after concrete placement.

(h) Upon inspection, shoring equipment that is found to be damaged or weakened shall be immediately removed and replaced.

(i) The sills for shoring shall be sound, rigid, and capable of carrying the maximum intended load without settlement or displacement.

(j) All base plates, shore heads, extension devices, and adjustment screws shall be in firm contact, and secured when necessary, with the foundation and the form.

(k) Eccentric loads on shore heads and similar members shall be prohibited unless these members have been designed for such loading.

WAC 296-155-684 (Cont.)

(l) The minimum total design load for any shoring used in slab and beam structures shall be not less than one hundred pounds per square foot for the combined live and dead load regardless of slab thickness; however, the minimum allowance for live load and formwork shall be not less than twenty pounds per square foot in addition to the weight of the concrete. Additional allowance for live load shall be added for special conditions other than when placing concrete for standard-type slabs and beams. Shoring shall also be designed to resist all foreseeable lateral loads such as wind, cable tensions, inclined supports, impact of placement, and starting and stopping of equipment. The assumed value of load due to wind, impact of concrete, and equipment acting in any direction at each floor line shall not be less than one hundred pounds per lineal foot of floor edge or two percent of total dead load of the floor, whichever is greater. (See subsection (3)(b) of this section.)

(m) When motorized carts are used, the design load shall be increased twenty-five pounds per square foot.

(4) The design stresses for form lumber and timbers shall be within the tolerance of the grade, condition, and species of lumber used.

(5) The design stresses used for form lumber and timber shall be shown on all drawings, specifications, and shoring layouts.

(6) All load-carrying timber members of scaffold framing shall be a minimum of 1500 f (stress grade) construction grade lumber. All dimensions are nominal sizes except that where rough sizes are noted, only rough or undressed lumber of the size specified shall satisfy minimum requirements.

(7) When shoring from soil, an engineer or other qualified person shall determine that the soil is adequate to support the loads which are to be placed on it.

(8) Precautions shall be taken so that weather conditions do not change the load-carrying conditions of the soil below the design minimum.

(9) When shoring from fill or when excessive earth disturbance has occurred, an engineer or other qualified person shall supervise the compaction and reworking of the disturbed area and determine that it is capable of carrying the loads which are to be imposed upon it.

(10) Suitable sills shall be used on a pan or grid dome floor or any other floor system involving voids where vertical shoring equipment could concentrate an excessive load on a thin concrete section.

(11) When temporary storage of reinforcing rods, material, or equipment on top of formwork becomes necessary, these areas shall be sufficient to meet the loads.

(12) If any deviation in the shoring plan is necessary because of field conditions, the person who prepared the shoring layout shall be consulted for approval of the actual field setup before concrete is placed.

(13) The shoring setup shall be checked to insure that all details of the layout have been met.

(14) The completed shoring setup shall be a homogenous unit or units and shall have the specified bracing to give it lateral stability.

(15) The shoring setup shall be checked to make certain that bracing specified in the shoring layout for lateral stability is in place.

WAC 296-155-684 (Cont.)

(16) All vertical shoring equipment shall be plumb. Maximum allowable deviation from the vertical is one-eighth inch in three feet. If this tolerance is exceeded, the shoring equipment shall not be used until readjusted within this limit.

(17) Upon inspection, shoring equipment that is found to be damaged or weakened shall be immediately removed and replaced.

(18) Shoring equipment shall not be released or removed until the approval of a qualified engineer has been received.

(19) Removal of shoring equipment shall be planned so that the equipment which is still in place is not overloaded.

(20) Slabs or beams which are to be reshored should be allowed to take their actual permanent deflection before final adjustment of reshoring equipment is made.

(21) While the reshoring is underway, no construction loads shall be permitted on the partially-cured concrete.

(22) The allowable load on the supporting slab shall not be exceeded when reshoring.

(23) The reshoring shall be thoroughly checked to determine that it is properly placed and that it has the load capacity to support the areas that are being reshored.

[Statutory Authority: Chapter 49.17 RCW. 94-15-096 (Order 94-07), § 296-155-684, filed 7/20/94, effective 9/20/94; 89-11-035 (Order 89-03), § 296-155-684, filed 5/15/89, effective 6/30/89.]

WAC 296-155-685 Tubular welded frame shoring.

(1) Metal tubular frames used for shoring shall have allowable loads based on tests conducted according to the Recommended Procedure for Compression Testing of Scaffolds and Shores, Scaffolding & Shoring Institute, 1967.

(2) Design of shoring layouts shall be based on allowable loads which were obtained using the test procedures of subsection (1) of this section and on at least a two and one-half to one safety factor.

(3) All metal frame shoring equipment shall be inspected before erection.

(4) Metal frame shoring equipment and accessories shall not be used if heavily rusted, bent, dented, rewelded, or having broken weldments or other defects.

(5) All locking devices on frames and braces shall be in good working order, coupling pins shall align the frame or panel legs, pivoted cross braces shall have their center pivot in place, and all components shall be in a condition similar to that of original manufacture.

(6) When checking the erected shoring frames with the shoring layout, the spacing between towers and cross-brace spacing shall not exceed that shown on the layout, and all locking devices shall be in the closed position.

(7) Devices for attaching the external lateral stability bracing shall be securely fastened to the legs of the shoring frames.

(8) All baseplates, shore heads, extension devices, or adjustment screws shall be in firm contact with the footing sill and the form material, and shall be snug against the legs of the frames.

WAC 296-155-685 (Cont.)

(9) Eccentric loads on shore heads and similar members shall be prohibited unless the shore heads have been designed for such loading.

(10) When formwork is installed at an angle, or sloping, or when the surface shored from is sloping, the shoring shall be designed for such loading.

(11) Adjustment screws shall not be adjusted to raise formwork after the concrete is in place.

[Statutory Authority: Chapter 49.17 RCW. 89-11-035 (Order 89-03), § 296-155-685, filed 5/15/89, effective 6/30/89; Order 74-26, § 296-155-685, filed 5/7/74, effective 6/6/74.]

WAC 296-155-686 Tube and coupler shoring.

(1) Tube and coupler towers used for shoring shall have allowable loads based on tests conducted according to the Recommended Procedure for Compression Testing of Scaffolds and Shores, Scaffolding & Shoring Institute, 1967.

(2) Design of shoring layouts shall be based on working loads which were obtained using the test procedures of subsection (1) of this section and on at least a two and one-half to one safety factor.

(3) All tube and coupler components shall be inspected before being used.

(4) Tubes of shoring structures shall not be used if heavily rusted, bent, dented, or having other defects.

(5) Couplers (clamps) shall not be used if deformed, broken, or having defective or missing threads on bolts, or other defects.

(6) The material used for the couplers (clamps) shall be of a structural type such as drop-forged steel, malleable iron, or structural grade aluminum. Gray cast iron shall not be used.

(7) When checking the erected shoring towers with the shoring layout, the spacing between posts shall not exceed that shown on the layout, and all interlocking of tubular members and tightness of couplers should be checked.

(8) All baseplates, shore heads, extension devices, or adjustment screws shall be in firm contact with the footing sill and the form material, and shall be snug against the posts.

(9) Eccentric loads on shore heads and similar members shall be prohibited unless the shore heads have been designed for such loading.

(10) Special precautions shall be taken when formwork is at angles, or sloping, or when the surface shored from is sloping.

(11) Adjustment screws shall not be adjusted to raise formwork after the concrete is in place.

[Statutory Authority: Chapter 49.17 RCW. 89-11-035 (Order 89-03), § 296-155-686, filed 5/15/89, effective 6/30/89.]

WAC 296-155-687 Single post shores.

(1) When checking erected single post shores with the shoring layout, the spacing between shores in either direction shall not exceed that shown on the layout, and all clamps, screws, pins, and all other components shall be in the closed or engaged position.

WAC 296-155-687 (Cont.)

(2) For stability, single post shores shall be horizontally braced in both the longitudinal and transverse directions. Diagonal bracing shall also be installed. Such bracing shall be installed as the shores are being erected.

(3) Devices which attach to the external lateral stability bracing shall be securely fastened to the single post shores.

(4) All baseplates or shore heads of single post shores shall be in firm contact with the footing sill and the form material.

(5) Whenever single post shores are used in more than one tier, the layout shall be designed and inspected by a structural engineer.

(6) Eccentric loads on shore heads shall be prohibited unless the shore heads have been designed for such loading.

(7) When formwork is at an angle, or sloping, or when the surface shored from is sloping, the shoring shall be designed for such loading.

(8) Adjustment of single post shores to raise formwork shall not be made after concrete is in place.

(9) Respecting fabricated single post shores, the following shall apply:

(a) The clamp used for adjustable timber single post shores shall have working load ratings based on tests conducted according to the standard test procedures for fabricated single post shores in Recommended Procedure for Compression Testing of Scaffolds and Shores, Scaffolding & Shoring Institute, 1967, and on at least a three to one safety factor.

(b) Shoring layouts shall be made using working loads which were obtained using the test procedures of (a) of this subsection, and on at least a three to one safety factor.

(c) All fabricated single post shores shall be inspected before being used.

(d) Fabricated single post shores shall not be used if heavily rusted, bent, dented, rewelded, or having broken weldments or other defects. If they contain timber, they shall not be used if timber is split, cut, has sections removed, is rotted, or otherwise structurally damaged.

(e) All clamps, screws, pins, threads, and all other components shall be in a condition similar to that of original manufacture.

(10) Respecting adjustable timber single post shores, the following shall apply:

(a) The clamp used for adjustable timber single post shores shall have working load ratings based on tests conducted according to the standard test procedures for fabricated single post shores in Recommended Procedure for Compression Testing of Scaffolds and Shores, Scaffolding & Shoring Institute, 1967, and on at least a three to one safety factor.

(b) Timber used shall have the safety factor and allowable working load for each grade and species as recommended in the Tables for wooden columns in the Wood Structural Design Data Book, National Forest Products Association, 1970.

WAC 296-155-687 (Cont.)

(c) The shoring layout shall be made using the allowable load obtained by using the test procedure for the clamp or Tables for timber referred to in (a) and (b) of this subsection.

(d) All timber and adjusting devices to be used for adjustable timber single post shores shall be inspected before erection.

(e) Timber shall not be used if it is split, cut, has sections removed, is rotted, or is otherwise structurally damaged.

(f) Adjusting devices shall not be used if heavily rusted, bent, dented, rewelded, or having broken weldments or other defects.

(g) All nails used to secure bracing on adjustable timber single post shores shall be driven home and the point of the nail bent over.

(11) Respecting timber single post shores, the following shall apply:

(a) Timber used as single post shores shall have the safety factor and allowable working load for each grade and species as recommended in the Tables for wooden columns in the Wood Structural Design Data Book, National Forest Products Association, 1970.

(b) The shoring layout shall be prepared by using working loads obtained by using the Tables referred to in (a) of this subsection.

(c) All timber to be used for single post shoring shall be inspected before erection.

(d) Timber shall not be used if it is split, cut, has sections removed, is rotted, or is otherwise structurally damaged.

(e) All nails used to secure bracing on timber single post shores shall be driven home and the point of the nail bent over.

(12) Tiered single post shores. Whenever single post shores are used one on top of another (tiered), the employer shall comply with the following specific requirements in addition to the general requirements for formwork:

(a) The design of the shoring shall be prepared by a qualified designer and the erected shoring shall be inspected by an engineer qualified in structural design.

(b) The single post shores shall be vertically aligned.

(c) The single post shores shall be spliced to prevent misalignment.

(d) The single post shores shall be adequately braced in two mutually perpendicular directions at the splice level. Each tier shall also be diagonally braced in the same two directions.

(e) Adjustment of single post shores to raise formwork shall not be made after the placement of concrete.

(f) Reshoring shall be erected, as the original forms and shores are removed, whenever the concrete is required to support loads in excess of its capacity.

[Statutory Authority: Chapter 49.17 RCW. 89-11-035 (Order 89-03), § 296-155-687, filed 5/15/89, effective 6/30/89.]

WAC 296-155-688 Vertical slip forms.

(1) Slip forms shall be designed and constructed, and the form movement carried out, under the immediate supervision of a person or persons experienced in slip form design and operation. Drawings prepared by a qualified engineer, showing the jack layout, formwork, working decks, and scaffolding, shall be available at the jobsite, and followed.

(2) The steel rods or pipe on which the jacks climb or by which the forms are lifted shall be designed for this purpose. Such rods must be adequately braced where not encased in concrete.

(3) Forms shall be designed to prevent excessive distortion of the structure during the jacking operation.

(4) All vertical slip forms shall be provided with scaffolding or work platforms completely encircling the area of placement.

(5) Jacks and vertical supports shall be positioned in such a manner that the loads do not exceed the rated capacity of the jacks.

(6) The jacks or other lifting devices shall be provided with mechanical dogs or other automatic holding devices to support the slip forms whenever failure of the power supply or lifting mechanism occurs.

(7) The form structure shall be maintained within all design tolerances specified for plumbness during the jacking operation.

(8) Lifting shall proceed steadily and uniformly and shall not exceed the predetermined safe rate of lift. A jacking system, which provides precise, simultaneous movement of the entire form in small preselected increments, is recommended for large structures.

(9) Workers placing reinforcing steel shall comply with the requirements of chapter 296-155 WAC, Part C-1 when working above the scaffold level.

(10) The total allowable load on slip form platforms shall be determined by the design engineer and enforced by the field supervisor.

(11) Lateral and diagonal bracing of the forms shall be provided to prevent excessive distortion of the structure during the sliding operation.

(12) While the slide is in operation, the form structure shall be maintained in line and plumb.

(13) A field supervisor experienced in slip form construction shall be present on the deck at all times.

[Statutory Authority: Chapter 49.17.010, .040, .050, .060 RCW. 98-05-046 (Order 97-10), § 296-155-688, filed 2/13/98, effective 4/15/98. Chapter 49.17 RCW. 91-03-044 (Order 90-18), § 296-155-688, filed 1/10/91, effective 2/12/91; 89-11-035 (Order 89-03), § 296-155-688, filed 5/15/89, effective 6/30/89.]

WAC 296-155-689 Placing and removal of forms.

(1) When moved or raised by crane, cableway, A-frame, or similar mechanical device, forms shall be securely attached to slings having a minimum safety factor of five. Use of No. 9 tie wire, fiber rope, and similar makeshift lashing shall be prohibited.

(2) Taglines shall be used in moving panels or other large sections of forms by crane or hoist.

WAC 296-155-689 (Cont.)

(3) All hoisting equipment, including hoisting cable used to raise and move forms shall have a minimum safety factor incorporated in the manufacturer's design, and the manufacturer's recommended loading shall not be exceeded. Field-fabricated or shop-fabricated hoisting equipment shall be designed or approved by a registered professional engineer, incorporating a minimum safety factor of five in its design. Panels and built-up form sections shall be equipped with metal hoisting brackets for attachment of slings.

(4) Forms intended for use where there is a free fall of over ten feet shall be equipped with adequate scaffolding and guardrails, or employees working on the forms shall be protected from falls in accordance with chapter 296-155 WAC, Part C-1 during forming and stripping operations.

(5) Vertical forms being raised or removed in sections shall not be released until adequately braced or secured. Overhead forms shall not be released until adequately braced or secured.

(6) Workers or others at lower levels shall be protected from falling materials. Appropriate warning signs shall be erected along walkways.

(7) Forms shall not be removed until the concrete is cured. The concrete shall be adequately set in order to permit safe removal of the forms, shoring, and bracing. Engineer's specifications and local building codes shall be adhered to in determining the length of time forms should remain in place following concrete placement. In addition, tests shall be made on field-cured concrete specimens in order to insure that concrete has obtained sufficient strength to safely support the load prior to removal of forms.

[Statutory Authority: Chapter 49.17.010, .040, .050, .060 RCW. 98-05-046 (Order 97-10), § 296-155-689, filed 2/13/98, effective 4/15/98. Chapter 49.17 RCW. 91-03-044 (Order 90-18), § 296-155-689, filed 1/10/91, effective 2/12/91; 89-11-035 (Order 89-03), § 296-155-689, filed 5/15/89, effective 6/30/89.]

WAC 296-155-690 Appendix to WAC 296-155-684 cast in place concrete. General requirements for formwork.

(This Appendix is nonmandatory.)

This Appendix serves as a nonmandatory guideline to assist employers in complying with the formwork requirements in WAC 296-155-684 (1)(a). Formwork which has been designed, fabricated, erected, braced, supported, and maintained in accordance with Sections 6 and 7 of the American National Standard for Construction and Demolition Operations-Concrete and Masonry Work, ANSI A10.9-1983, shall be deemed to be in compliance with the provision of WAC 296-155-684 (1)(a).

[Statutory Authority: Chapter 49.17 RCW. 90-03-029 (Order 89-20), § 296-155-690, filed 1/11/90, effective 2/26/90; 89-11-035 (Order 89-03), § 296-155-690, filed 5/15/89, effective 6/30/89. Statutory Authority: RCW 49.17.040 and 49.17.050. 86-03-074 (Order 86-14), § 296-155-690, filed 1/21/86; Order 74-26, § 296-155-690, filed 5/7/74, effective 6/6/74.]

WAC 296-155-691 Precast concrete and tilt-up operations.

(1) It shall be the responsibility of the contractor to use accessories which are designed to be compatible.

(2) The design capacity of all lifting devices and accessories shall be known. The devices and accessories with the appropriate capacity shall be used.

(3) Prior to pouring the panels of a tilt-up type construction job, a set of plans or job specifications, including lifting procedures, shall be drawn up.

(a) These plans shall be at the job site and made available upon request.

(b) Any changes made in the rigging procedure of a tilt-up panel or slab shall provide the same degree of safety as required by the original plans.

WAC 296-155-691 (Cont.)

(c) The plans or specifications shall contain the following information:

(i) The type, size, and location of all lifting inserts.

(ii) The type, size, and location of all brace inserts or fittings for guy wires in each panel and floor or support.

(iii) The size of braces or guys to be used.

(iv) The compression strength which concrete panels must attain prior to being lifted.

(4) The following conditions shall be included in the erection process and shall be incorporated in the design plan:

(a) Braces and all associated components of the bracing system shall be designed to incorporate a safety factor of one and one-half to resist any normal stresses to which they may be subjected, including normal high wind velocity pressures for the area.

(b) Precast concrete wall units, structural framing, and tilt-up wall panels shall be adequately supported to prevent overturning and to prevent collapse until permanent connections are completed.

(c) Floor braces used to secure panel sections shall be placed at an angle of not less than forty-five degrees or more than sixty degrees from horizontal when physically possible to install in this manner.

(d) The bracing on all panel sections shall be installed in such a manner as to prevent the panel from accidentally rotating.

(e) Each panel section not secured by other means shall have a minimum of two braces. The braces shall be installed in such a manner as to evenly distribute the load or guy wires, when properly installed, may be used in lieu of stiff leg braces.

(f) If braces are attached to a panel or slab by bolts tightened into inserts installed in holes drilled in concrete, the type of inserts used and method of installation shall be such as to develop the required strength to be maintained for the bracing system.

(g) Inserts to be installed for lifting sections of tilt-up precast panels shall be designed mechanically to maintain a safety factor of three.

(h) Lifting inserts which are embedded or otherwise attached to precast concrete members, other than the tilt-up members, shall be capable of supporting at least four times the maximum intended load applied or transmitted to them.

(i) The compression strength of the concrete shall be such that when the proper type, size, and amount of inserts are installed a minimum safety factor of two will be maintained.

(j) Lifting hardware shall be capable of supporting at least five times the maximum intended load applied or transmitted to the lifting hardware.

WAC 296-155-691 (Cont.)

(k) Lifting bolts or other lifting devices which have been bent, worn, or are defective shall be discarded.

(l) The upper and lower sections of telescoping type braces shall be secured by high tensile steel pins or bolts which provide adequate shear strength and which will positively secure against accidental removal.

(m) Manufactured products shall not be altered in a manner which would reduce the safe working load to less than its original value.

(n) Inserts shall be positioned so that bolts, or lifting devices, when inserted, will be perpendicular to the face on which they are placed.

(5) Design of the panels and layout of the pour shall be made in such a manner so that when picking, the top of the panel will be away from the crane. If this is not possible, the contractor shall consult with a representative of the department and the crane company involved to determine the procedure to be followed in lifting and placing in its permanent position safely. Panels shall be lifted and handled in such a manner that they will not strike the hoisting equipment, in case of failure.

(a) Physical stops shall be provided which will prevent the bottom edge of a panel being set from slipping off the edge of its supporting structure.

(b) Tilt-up panels shall not be set when there is a possibility that wind velocity would create a hazardous condition.

(c) A qualified signalperson shall be designated and shall consult with the crane operator on lifting procedures prior to making the pick. The signalperson shall be located in such a position during the pick of the panel that they can observe both the crane operator and the employees working in the immediate area.

(d) During the lifting process, workers shall keep clear of the under side of the panel.

(e) Persons not involved in the lifting process shall be kept clear of the hazardous area near where panels are being raised, moved or placed.

(f) If braces must be removed temporarily during construction, other effective means shall be provided to safely support the panel during the interim period.

(g) Each panel shall be properly braced or otherwise secured prior to removal of the hoisting equipment.

(h) Short panels or sections not otherwise supported by floor, footings, columns or other structure, shall be properly shored.

[Statutory Authority: Chapter 49.17 RCW. 94-15-096 (Order 94-07), § 296-155-691, filed 7/20/94, effective 9/20/94; 90-17-051 (Order 90-10), § 296-155-691, filed 8/13/90, effective 9/24/90; 89-11-035 (Order 89-03), § 296-155-691, filed 5/15/89, effective 6/30/89.]

WAC 296-155-694 Requirements for lift-slab construction operations.

(1) Lift-slab operations shall be designed and planned by a registered professional engineer who has experience in lift-slab construction. Such plans and designs shall be implemented by the employer and shall include detailed instructions and sketches indicating the prescribed method of erection. These plans and designs shall also include provisions for ensuring lateral stability of the building/structure during construction.

(2) Jacks/lifting units shall be marked to indicate their rated capacity as established by the manufacturer.

(3) Jacks/lifting units shall not be loaded beyond their rated capacity as established by the manufacturer.

(4) Jacking equipment shall be capable of supporting at least two and one-half times the load being lifted during jacking operations and the equipment shall not be overloaded. For the purpose of this provision, jacking equipment includes any load bearing component which is used to carry out the lifting operation(s). Such equipment includes, but is not limited to, the following: Threaded rods, lifting attachments, lifting nuts, hook-up collars, T-caps, shearheads, columns, and footings.

(5) Jacks/lifting units shall be designed and installed so that they will neither lift nor continue to lift when they are loaded in excess of their rated capacity.

(6) Jacks/lifting units shall have a safety device installed which will cause the jacks/lifting units to support the load in any position in the event any jack/lifting unit malfunctions or losses [loses] its lifting ability.

(7) Jacking operations shall be synchronized in such a manner to ensure even and uniform lifting of the slab. During lifting, all points at which the slab is supported shall be kept within 1/2 inch of that needed to maintain the slab in a level position.

(8) If leveling is automatically controlled, a device shall be installed that will stop the operation when the 1/2 inch tolerance set forth in subsection (7) of this section is exceeded or where there is a malfunction in the jacking (lifting) system.

(9) If leveling is maintained by manual controls, such controls shall be located in a central location and attended by a competent person while lifting is in progress. In addition to meeting the definition in WAC 296-155-012(4), the competent person must be experienced in the lifting operation and with the lifting equipment being used.

(10) The maximum number of manually controlled jacks/lifting units on one slab shall be limited to a number that will permit the operator to maintain the slab level within specified tolerances of subsection (7) of this section, but in no case shall that number exceed 14.

(11) No employee, except those essential to the jacking operation, shall be permitted in the building/structure while any jacking operation is taking place unless the building/structure has been reinforced sufficiently to ensure its integrity during erection. The phrase **"reinforced sufficiently to ensure its integrity"** used in this subsection means that a registered professional engineer, independent of the engineer who designed and planned the lifting operation, has determined from the plans that if there is a loss of support at any jack location, that loss will be confined to that location and the structure as a whole will remain stable.

(a) Under no circumstances, shall any employee who is not essential to the jacking operation be permitted immediately beneath a slab while it is being lifted.

(b) For the purpose of subsection (11) of this section, a jacking operation begins when a slab or group of slabs is lifted and ends when such slabs are secured (with either temporary connections or permanent connections).

WAC 296-155-694 (Cont.)

(c) Employers who comply with Appendix A to WAC 296-155-694 shall be considered to be in compliance with the provisions of subsections (11) through (11)(c) of this section.

(12) When making temporary connections to support slabs, wedges shall be secured by tack welding, or an equivalent method of securing the wedges to prevent them from falling out of position. Lifting rods may not be released until the wedges at that column have been secured.

(13) All welding on temporary and permanent connections shall be performed by a certified welder, familiar with the welding requirements specified in the plans and specifications for the lift-slab operation.

(14) Load transfer from jack/lifting units to building columns shall not be executed unit the welds on the column shear plates (weld blocks) are cooled to air temperature.

(15) Jacks/lifting units shall be positively secured to building columns so that they do not become dislodged or dislocated.

(16) Equipment shall be designed and installed so that the lifting rods cannot slip out of position or the employer shall institute other measures, such as the use of locking or blocking devices, which will provide positive connection between the lifting rods and attachments and will prevent components from disengaging during lifting operations.

Appendix to WAC 296-155-694-Lift-slab operations

(This appendix is nonmandatory.)

In WAC 296-155-694(11), WISHA requires employees to be removed from the building/structure during jacking operations unless an independent registered professional engineer, other than the engineer who designed and planned the lifting operation, has determined that the building/structure has been sufficiently reinforced to insure the integrity of the building/structure. One method to comply with this provision is for the employer to ensure that continuous bottom steel is provided in every slab and in both directions through every wall or column head area. (**Column head area** means the distance between lines that are one and one half times the thickness of the slab or drop panel. These lines are located outside opposite faces of the outer edges of the shearhead sections-See Figure 1.) The amount of bottom steel shall be established by assuming loss of support at a given lifting jack and then determining the steel necessary to carry, by catenary action over the span between surrounding supports, the slab service dead load plus any service dead and live loads likely to be acting on the slab during jacking. In addition, the surrounding supports must be capable of resisting any additional load transferred to them as a result of the loss of support at the lifting jack considered.

WAC 296-155-694 (Cont.)

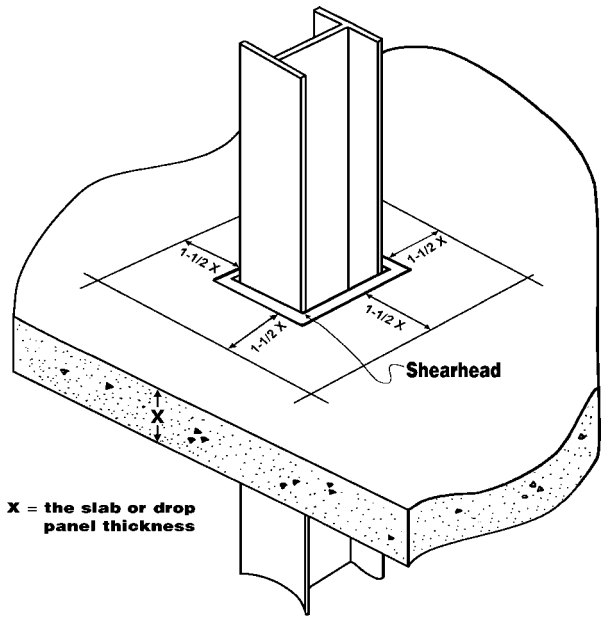

Figure 1 -- Column Head Area

[Statutory Authority: Chapter 49.17 RCW and RCW 49.17.040, [49.17].050 and [49.17].060. 92-22-067 (Order 92-06), § 296-155-694, filed 10/30/92, effective 12/8/92. Statutory Authority: Chapter 49.17 RCW. 91-11-070 (Order 91-01), § 296-155-694, filed 5/20/91, effective 6/20/91; 90-03-029 (Order 89-20), § 296-155-694, filed 1/11/90, effective 2/26/90; 89-11-035 (Order 89-03), § 296-155-694, filed 5/15/89, effective 6/30/89.]

WAC 296-155-695 Miscellaneous concrete construction.

(1) General provisions.

(a) Deadheads used in post tensioning of tendons shall be the type that will increase the grip on the cable as the tension is increased.

(b) Proper means and equipment shall be used to prevent the over-tensioning of the tendons.

(c) Only qualified workers shall perform this type work.

(2) Prestressed and poststressed concrete operations.

(a) Anchor fitting. In utilizing anchor fittings for tensioned strands, the recommendations and instructions of the supplier concerning installation, maintenance, and replacement shall be followed.

(b) Tools and strand vices shall be kept clean and in good repair.

(c) Safety factor.

(i) Expendable strand deflection devices used to pretension concrete members shall have a minimum safety factor of two.

WAC 296-155-695 (Cont.)

(ii) Reusable strand deflection devices shall have a minimum safety factor of three.

(d) Jacking operations.

(i) During jacking operations of any tensioning element or group of tensioning elements, the anchors shall be kept turned up close to the anchorplate.

(ii) No one shall be permitted to stand in line or directly over the jacking equipment during tensioning operations.

(iii) Employees shall not stand behind the jack during tensioning operations.

(e) Jacking and pulling equipment. Pulling headers, bolts, and hydraulic rams shall be frequently inspected for indication of fatigue, and the threads on bolts and nuts inspected for diminishing cross section.

(f) Storage. Stressed members shall be stored on a level base and adequately supported during storage and transportation to prevent tipping.

(g) Rigging.

(i) Stressed members shall be handled at pick points specifically designated on the manufacturer's drawings.

(ii) Stressed members shall be lifted with lifting devices recommended by the manufacturer or the engineer in charge.

(iii) No one shall be allowed under stressed members during lifting and erection.

[Statutory Authority: Chapter 49.17 RCW. 89-11-035 (Order 89-03), § 296-155-695, filed 5/15/89, effective 6/30/89. Statutory Authority: RCW 49.17.040 and 49.17.050. 86-03-074 (Order 86-14), § 296-155-695, filed 1/21/86; Order 74-26, § 296-155-695, filed 5/7/74, effective 6/6/74.]

WAC 296-155-697 Requirements for masonry construction.

(1) A limited access zone shall be established whenever a masonry wall is being constructed. The limited access zone shall conform to the following:

(2) The limited access zone shall be established prior to the start of construction of the wall.

(3) The limited access zone shall be equal to the height of the wall to be constructed plus four feet, and shall run the entire length of the wall.

(4) The limited access zone shall be established on the side of the wall which will be unscaffolded.

(5) The limited access zone shall be restricted to entry by employees actively engaged in constructing the wall. No other employees shall be permitted to enter the zone.

(6) The limited access zone shall remain in place until the wall is adequately supported to prevent overturning and to prevent collapse unless the height of wall is over eight feet, in which case, the limited access zone shall remain in place until the requirements of subsection (7) of this section have been met.

WAC 296-155-697 (Cont.)

(7) All masonry walls over eight feet in height shall be adequately braced to prevent overturning and to prevent collapse unless the wall is adequately supported so that it will not overturn or collapse. The bracing shall remain in place until permanent supporting elements of the structure are in place.

(8) Employees engaged in cutting or chipping shall wear suitable eye protection in accordance with WAC 296-155-215.

(9) Masonry saws shall be constructed, guarded and operated in accordance with WAC 296-155-367 (1) through (4).

(10) Persons charged with operation of derricks used for stone setting shall be qualified in that type of work.

(11) Stone shall be set directly on the wall by the derrick.

(12) Breast derricks when used in setting stone shall be secured against a slip or kick back and guyed with wire cables. Provide hold down line to prevent derrick from falling back.

(13) Stone cutters shall wear goggles while trimming stone or cutting holes.

(14) Pins shall be tested for security before stone is hoisted.

(15) Hoisting cables shall be protected from chafing and wearing over corners.

(16) Mason's mortar mixers shall have a bar-type grill installed over the mixer opening. The guard shall be installed with an automatic disconnect switch to stop the mixer tub rotation and prevent the mixer from starting whenever the guard is not in place.

[Statutory Authority: Chapter 49.17 RCW. 90-17-051 (Order 90-10), § 296-155-697, filed 8/13/90, effective 9/24/90; 90-03-029 (Order 89-20), § 296-155-697, filed 1/11/90, effective 2/26/90; 89-11-035 (Order 89-03), § 296-155-697, filed 5/15/89, effective 6/30/89.]

WAC 296-155-699 Appendix A to Part O-References to Part O of chapter 296-155 WAC. (This Appendix is nonmandatory.)

The following nonmandatory references provide information which can be helpful in understanding and complying with the requirements contained in Part O.

- Accident Prevention Manual for Industrial Operations; Eighth Edition; National Safety Council.
- Building Code Requirements for Reinforced Concrete (ACI 318-83).
- Formwork for Concrete (ACI SP-4).
- Recommended Practice for Concrete Formwork (ACI 347-78).
- Safety Requirements for Concrete and Masonry Work (ANSI A10.9-1983).
- Standard Test Method for Compressive Strength of Cylindrical Concrete Specimens

(ASTM C39-86).

WAC 296-155-699 (Cont.)

- Standard Test Method for Making and Curing Concrete Test Specimens in the Field

(ASTM C31-85).

- Standard Test Method for Penetration Resistance of Hardened Concrete (ASTM C803-82).

- Standard Test Method for Compressive Strength of Concrete Cylinders Cast In-Place in Cylindrical Molds (ASTM C873-85).

- Standard Method for Developing Early Age Compressive Test Values and Projecting Later Age Strengths (ASTM C918-80).

- Recommended Practice for Inspection and Testing Agencies for Concrete, Steel and Bituminous Materials as Used in Construction (ASTM E329-77).

- Method of Making and Curing Concrete Test Specimens in the Laboratory (ASTM C192-88).

- Methods of Obtaining and Testing Drilled Cores and Sawed Beams of Concrete

(ASTM C42-87).

- Methods of Securing, Preparing and Testing Specimens from Hardened Lightweight Insulating Concrete for Compressive Strength (ASTM C513-86).

- Test Method for Comprehensive Strength of Lightweight Insulating Concrete

(ASTM C495-86).

- Method of Making, Accelerating Curing, and Testing of Concrete Compression Test Specimens (ASTM C684-81).

- Test Method for Compressive Strength of Concrete Using Portions of Beams Broken in Flexure (ASTM C116-68 (1980)).

[Statutory Authority: Chapter 49.17 RCW. 94-15-096 (Order 94-07), § 296-155-699, filed 7/20/94, effective 9/20/94; 89-11-035 (Order 89-03), § 296-155-699, filed 5/15/89, effective 6/30/89.]

PART P
STEEL ERECTION

WAC 296-155-700 General requirements.

(1) Erection gangs on structural steel erection shall work under the direction of experienced crew leader.

(2) Workers shall not ride on steel being hoisted, nor slide down ropes, columns or ladders.

(3) Wire rope slings shall be used when lifting loads. Care shall be taken to avoid sharp bends by using wood or similar type padding between wire rope and load. Reinforcing steel shall not be lifted by bundling ties.

(4) If float scaffolds are used during steel erection, they shall be used in accordance with WAC 296-155-484(19).

[Statutory Authority: Chapter 49.17.010, .040, .050, .060 RCW. 98-05-046 (Order 97-10), § 296-155- 700, filed 2/13/98, effective 4/15/98. Chapter 49.17 RCW. 94-15-096 (Order 94-07), § 296-155-700, filed 7/20/94, effective 9/20/94; 91-03-044 (Order 90-18), 296-155-700, filed 1/10/91, effective 2/12/91. Statutory Authority: RCW 49.17.040 and 49.17.050. 86-03-074 (Order 86-14), § 296-155-700, filed 1/21/86; Order 76-29, § 296-155-700, filed 9/30/76; Order 74-26, § 296-155-700, filed 5/7/74, effective 6/6/74.]

WAC 296-155-705 Flooring requirements.

(1) Permanent flooring-Skeleton steel construction in tiered buildings.

(a) The permanent floors shall be installed as the erection of structural members progresses, and there shall be not more than eight stories between the erection floor and the uppermost permanent floor, except where the structural integrity is maintained as a result of the design.

(b) At no time shall there be more than four floors or 48 feet of unfinished bolting or welding above the foundation or uppermost permanently secured floor.

(2) Temporary flooring-Skeleton steel construction in tiered buildings.

(a) (i) The derrick or erection floor shall be solidly planked or decked over its entire surface except for access openings. Planking or decking of equivalent strength, shall be of proper thickness to carry the working load. Planking shall be not less than 2 inches thick full size undressed, and shall be laid tight and secured to prevent movement.

(ii) On buildings or structures not adaptable to temporary floors, and where scaffolds are not used, safety nets shall be installed and maintained whenever the potential fall distance exceeds 10 feet. The nets shall be hung with sufficient clearance to prevent contacts with the surface of structures below.

(iii) Floor periphery - safety railing. A standard railing including midrail of 1/2-inch wire rope or equivalent shall be installed at the periphery (including all floor openings) of all temporary-planked or temporary metal-decked floors of tier buildings and other multi-floored structures during structural steel assembly.

(b) (i) Where skeleton steel erection is being done, a tightly planked and substantial floor shall be maintained within two stories or twenty-five feet, whichever is less, below and directly under that portion of each tier of beams on which any work is being performed, except when gathering and stacking temporary floor planks on a lower floor, in preparation for transferring such planks for use on an upper floor. Where such a floor is not practicable, subsection (2)(a)(ii) of this section applies.

WAC 296-155-705 (Cont.)

(ii) When gathering and stacking temporary floor planks, the planks shall be removed successively, working toward the last panel of the temporary floor so that the work is always done from the planked floor.

(3) Flooring - other construction.

(a) In the erection of a building having double wood floor construction, the rough flooring shall be completed as the building progresses, including the tier below the one on which floor joists are being installed.

(b) For single wood floor or other flooring systems, the floor immediately below the story where the floor joists are being installed shall be kept planked or decked over.

[Statutory Authority: Chapter 49.17 RCW. 91-03-044 (Order 90-18), § 296-155-705, filed 1/10/91, effective 2/12/91. Statutory Authority: RCW 49.17.040 and 49.17.050. 86-03-074 (Order 86-14), § 296-155-705, filed 1/21/86; Order 76-29, § 296-155-705, filed 9/30/76; Order 74-26, § 296-155-705, filed 5/7/74, effective 6/6/74.]

WAC 296-155-710 Structural steel assembly.

(1) During the final placing of solid web structural members, the load shall not be released from the hoisting line until the members are secured with not less than two bolts, or the equivalent at each connection and drawn up wrench tight.

(2) Open web steel joists shall not be placed on any structural steel framework unless such framework is safely bolted or welded.

(3) (a) In steel framing, where bar joists are utilized, and columns are not framed in at least two directions with structural steel members, a bar joist shall be field-bolted at columns to provide lateral stability during construction.

(b) Where longspan joists or trusses, 40 feet or longer, are used, a center row of bolted bridging shall be installed to provide lateral stability during construction prior to slacking of hoisting line.

(c) No load shall be placed on open web steel joists until these security requirements are met.

(4) Tag lines shall be used for controlling loads.

[Order 74-26, § 296-155-710, filed 5/7/74, effective 6/6/74.]

WAC 296-155-715 Bolting, riveting, fitting-up, and plumbing-up.

(1) General requirements.

(a) Containers shall be provided for storing or carrying rivets, bolts, and drift pins, and secured against accidental displacement when aloft.

(b) Pneumatic hand tools shall be disconnected from the power source, and pressure in hose lines shall be released, before any adjustments or repairs are made.

(c) Air line hose sections shall be tied together except when quick disconnect couplers are used to join sections.

(d) Eye protection shall be provided in accordance with Part C of this chapter.

WAC 296-155-715 (Cont.)

(2) Bolting.

(a) When bolts or drift pins are being knocked out, means shall be provided to keep them from falling.

(b) Impact wrenches shall be provided with a locking device for retaining the socket.

(3) Riveting.

(a) Riveting shall not be done in the vicinity of combustible material unless precautions are taken to prevent fire.

(b) When workers are below and rivet heads are knocked off or backed out, means shall be provided to keep the rivet heads from falling on such workers.

(c) A safety wire shall be properly installed on the snap and on the handle of the pneumatic riveting hammer and shall be used at all times. The wire size shall be not less than No. 9 (B & S gauge), leaving the handle and annealed No. 14 on the snap or equivalent.

(d) The rivet heating equipment shall be kept as near as possible to the riveting gang with whom the rivet heater is working.

(e) Hot rivets shall never be thrown across shaftways or towards the outside of a building.

(f) When riveting is done on an outside wall, the rivets shall be passed by hand or thrown parallel to the wall.

(g) Metal cone shaped buckets shall be used for catching hot rivets.

(h) Riveters shall avoid allowing the air hose to become wrapped or tangled around their legs.

(i) Empty bolt and rivet kegs shall be removed from the floor as soon as possible.

(j) Pails and hand lines shall be used when raising or lowering bolts, rivets or small tools.

(k) The nozzle of the riveting gun shall be periodically inspected and the wire attachment not allowed to become worn so as to permit the nozzle to fly out with the air pressure.

(l) Electric welding equipment shall not be used where wire rope is used to suspend scaffolds.

(4) Plumbing-up.

(a) Connections of the equipment used in plumbing-up shall be properly secured.

(b) The turnbuckles shall be secured to prevent unwinding while under stress.

(c) Plumbing-up guys related equipment shall be placed so that employees can get at the connection points.

WAC 296-155-715 (Cont.)

(d) Plumbing-up guys shall be removed only under the supervision of a competent person.

(5) Wood planking shall be of proper thickness to carry the working load, but shall be not less than 2 inches thick full size undressed, exterior grade plywood, at least 3/4-inch thick, or equivalent material.

(6) Metal decking of sufficient strength shall be laid tight and secured to prevent movement.

(7) Planks shall overlap the bearing on each end by a minimum of 12 inches.

(8) Wire mesh, exterior plywood, or equivalent, shall be used around columns where planks do not fit tightly.

(9) Provisions shall be made to secure temporary flooring against displacement.

(10) All unused openings in floors, temporary or permanent, shall be completely planked over or guarded in accordance with Part K of this chapter.

(11) Temporary bracing and/or guying shall be utilized to stabilize a structure until construction has been completed.

(12) Employees shall use safety belts in accordance with Part C-1 of this chapter when they are working on float scaffolds.

[Statutory Authority: Chapter 49.17 RCW. 96-24-051, (Order 96-05), § 296-155-715, filed 11/27/96, effective 02/01/97. 95-10-016, § 296-155-715, filed 4/25/95, effective 10/1/95; 94-15-096 (Order 94-07), § 296-155-715, filed 7/20/94, effective 9/20/94; Order 76-29, § 296-155-715, filed 9/30/76; Order 74-26, § 296-155-715, filed 5/7/74, effective 6/6/74.]

WAC 296-155-720 Safe walking surfaces on structural members. Structural members with studs, dowels or shear connectors installed on the top side shall not be used as a walkway and/or means of access unless such studs, dowels or shear connectors are covered with suitable material and in such a manner as to provide a walking surface at least as stable and free of hazards as the top surface of the member would provide without attachments installed. For the purpose of this section, **"stud,"** shall mean all protruding metal attachments to structural members.

[Statutory Authority: Chapter 49.17 RCW. 91-03-044 (Order 90-18), § 296-155-720, filed 1/10/91, effective 2/12/91. Statutory Authority: RCW 49.17.040 and 49.17.050. 86-03-074 (Order 86-14), § 296-155-720, filed 1/21/86; Order 74-26, § 296-155-720, filed 5/7/74, effective 6/6/74.]

PART Q
UNDERGROUND CONSTRUCTION

WAC 296-155-725 Definitions applicable to this part.

(1) **"Acceptable"** means any device, equipment, or appliance that is either approved by MSHA and maintained in permissible condition, or is listed or labeled for the class and location under Part I of this chapter.

(2) **"Bulkhead"** means an airtight structure separating the working chamber from free air or from another chamber under a lesser pressure than the working pressure.

(3) **"Caisson"** means a wood, steel, concrete or reinforced concrete, air- and water-tight chamber in which it is possible for persons to work under air pressure greater than atmospheric pressure to excavate material below water level.

(4) **"Cofferdam"** means a watertight barricade or enclosure erected, sunk, driven or otherwise fabricated to permit the performance of work where hydrostatic pressure exists.

(5) **"Decanting"** means a method used for decompressing under emergency circumstances. In this procedure, the employees are brought to atmospheric pressure with a very high gas tension in the tissues and then immediately recompressed in a second and separate chamber or lock.

(6) **"Emergency locks"** means a lock designed to hold and permit the quick passage of an entire shift of employees.

(7) **"High air"** means air pressure used to supply power to pneumatic tools and devices.

(8) **"Low air"** means air supplied to pressurize working chambers and locks.

(9) **"Man lock"** means a chamber through which persons pass from one air pressure environment into another.

(10) **"Materials lock"** means a chamber through which materials and equipment pass from one air pressure environment into another.

(11) **"Medical lock"** means a special chamber in which employees are treated for decompression illness. It may also be used in pre-employment physical examinations to determine the adaptability of the prospective employee to changes in pressure.

(12) **"Rapid excavation machine"** means tunnel boring machines, shields, roadheaders, or any other similar excavation machine.

(13) **"Normal condition"** means one during which exposure to compressed air is limited to a single continuous working period followed by a single decompression in any given 24-hour period; the total time of exposure to compressed air during the single continuous working period is not interrupted by exposure to normal atmospheric pressure, and a second exposure to compressed air does not occur until at least 12 consecutive hours of exposure to normal atmospheric pressure has elapsed since the employee has been under pressure.

(14) **"Pressure"** means a force acting on a unit area. Usually shown as pounds per square inch. (p.s.i.)

(15) **"Absolute pressure"** (p.s.i.a.) means the sum of the atmospheric pressure and gauge pressure (p.s.i.g.)

(16) **"Atmospheric pressure"** means the pressure of air at sea level, usually 14.7 p.s.i.a. (1 atmosphere), or 0 p.s.i.g.

WAC 296-155-725 (Cont.)

(17) **"Gauge pressure"** (p.s.i.g.) means pressure measured by a gauge and indicating the pressure exceeding atmospheric.

(18) **"Safety screen"** means an air- and water-tight diaphragm placed across the upper part of a compressed air tunnel between the face and bulkhead, in order to prevent flooding the crown of the tunnel between the safety screen and the bulkhead, thus providing a safe means of refuge and exit from a flooding or flooded tunnel.

(19) **"Special decompression chamber"** means a chamber to provide greater comfort for employees when the total decompression time exceeds 75 minutes.

(20) **"Working chamber"** means the space or compartment under air pressure in which the work is being done.

(21) **"C.F.R."** means Code of Federal Regulations.

(22) **"MSHA"** means Mine Safety and Health Administration.

(23) "**NIOSH"** means National Institute for Occupational Safety and Health.

[Statutory Authority: Chapter 49.17 RCW. 90-03-029 (Order 89-20), § 296-155-725, filed 1/11/90, effective 2/26/90. Statutory Authority: RCW 49.17.040 and 49.17.050. 86-03-074 (Order 86-14), § 296-155-725, filed 1/21/86; Order 74-26, § 296-155-725, filed 5/7/74, effective 6/6/74.]

WAC 296-155-730 Tunnels and shafts.

(1) Scope and application.

(a) This section applies to the construction of underground tunnels, shafts, chambers, and passageways. This section also applies to cut-and-cover excavations which are both physically connected to ongoing underground construction operations within the scope of this section, and covered in such a manner as to create conditions characteristic of underground construction.

(b) This section does not apply to excavation and trenching operations covered by Part N of this chapter, such as foundation operations for above-ground structures that are not physically connected to underground construction operations, and surface excavation.

(c) The employer shall comply with the requirements of this part and chapter in addition to applicable requirements of chapter 296-36 WAC, Safety standards-Compressed air work.

(2) Access and egress.

(a) Each operation shall have a check-in/check-out system that will provide positive identification of every employee underground. An accurate record of identification and location of the employees shall be kept on the surface. This procedure is not required when the construction of underground facilities designed for human occupancy has been sufficiently completed so that the permanent environmental controls are effective, and when the remaining construction activity will not cause any environmental hazard, or structural failure within the facilities.

(b) The employer shall provide and maintain safe means of access and egress to all work stations.

(c) The employer shall provide access and egress in such a manner that employees are protected from being struck by excavators, haulage machines, trains, and other mobile equipment.

WAC 296-155-730 (Cont.)

(d) The employer shall control access to all openings to prevent unauthorized entry underground. Unused chutes, manways, or other openings shall be tightly covered, bulkheaded, or fenced off, and shall be posted with warning signs indicating "keep out" or similar language. Completed or unused sections of the underground facility shall be barricaded.

(3) Safety instruction. All employees shall be instructed in the recognition and avoidance of hazards associated with underground construction activities including, where appropriate, the following subjects:

(a) Air monitoring;

(b) Ventilation;

(c) Confined space entry procedures;

(d) Permit-required confined space entry procedures;

(e) Illumination;

(f) Communications;

(g) Flood control;

(h) Mechanical equipment;

(i) Personal protective equipment;

(j) Explosives;

(k) Fire prevention and protection; and

(l) Emergency procedures, including evacuation plans and check-in/check-out systems.

(4) Notification.

(a) Oncoming shifts shall be informed of any hazardous occurrences or conditions that have affected, or might affect employee safety, including liberation of gas, equipment failures, earth or rock slides, cave-ins, floodings, fire(s), or explosions.

(b) Information specified in (a) of this subsection shall be recorded in a shift journal which shall be current prior to the end of each shift, and shall be located aboveground.

(c) Oncoming supervisory personnel shall read the notification prior to going underground, and shall signify their understanding of the contents by affixing their respective initials to the log.

(d) The hazard notification log shall be retained on the site until the completion of the project.

(e) The employer shall establish and maintain direct communications for coordination of activities with other employers whose operations at the jobsite affect or may affect the safety of employees underground.

WAC 296-155-730 (Cont.)

(5) Communications.

(a) When natural unassisted voice communication is ineffective, a power-assisted means of voice communication shall be used to provide communication between the work face, the bottom of the shaft, and the surface.

(b) Two effective means of communication, at least one of which shall be voice communication, shall be provided in all shafts which are being developed or used either for personnel access or for hoisting. Additional requirements for hoist operator communication are contained in subsection (22)(c)(xv) of this section.

(c) Powered communication systems shall operate on an independent power supply, and shall be installed so that the use of or disruption of any one phone or signal location will not disrupt the operation of the system from any other location.

(d) Communication systems shall be tested upon initial entry of each shift to the underground, and as often as necessary at later times, to ensure that they are in working order.

(e) Any employee working alone underground in a hazardous location, who is both out of the range of natural unassisted voice communication and not under observation by other persons, shall be provided with an effective means of obtaining assistance in an emergency.

(6) Emergency provisions. Hoisting capability. When a shaft is used as a means of egress, the employer shall make advance arrangements for power-assisted hoisting capability to be readily available in an emergency, unless the regular hoisting means can continue to function in the event of an electrical power failure at the jobsite. Such hoisting means shall be designed so that the load hoist drum is powered in both directions of rotation and so that the brake is automatically applied upon power release or failure.

(7) Self-rescuers. The employer must provide self-rescuers certified by the National Institute for Occupational Safety and Health under 42 CFR part 84. The respirators must be immediately available to all employees at work stations in underground areas where employees might be trapped by smoke or gas. The selection, issuance, use, and care of respirators must be in accordance with the requirements of chapter 296-62 WAC, Part E.

(8) Designated person. At least one designated person shall be on duty aboveground whenever any employee is working underground. This designated person shall be responsible for securing immediate aid and keeping an accurate record of the number, identification, and location of employees who are underground in case of emergency. The designated person must not be so busy with other responsibilities that the personnel counting and identification function is encumbered.

(9) Emergency lighting. Each employee underground shall have an acceptable portable hand lamp or cap lamp in his or her work area for emergency use, unless natural light or an emergency lighting system provides adequate illumination for escape.

(10) Rescue teams.

(a) On jobsites where 25 or more employees work underground at one time, the employer shall provide (or make arrangements in advance with locally available rescue services to provide) at least two 5-person rescue teams, one on the jobsite or within one-half hour travel time from the entry point, and the other within 2 hours travel time.

WAC 296-155-730 (Cont.)

(b) On jobsites where less than 25 employees work underground at one time, the employer shall provide (or make arrangements in advance with locally available rescue services to provide) at least one 5-person rescue team to be either on the jobsite or within one-half hour travel time from the entry point.

(c) Rescue team members shall be qualified in rescue procedures, the use and limitations of breathing apparatus, and the use of fire fighting equipment. Qualifications shall be reviewed not less than annually.

(d) On jobsites where flammable or noxious gases are encountered or anticipated in hazardous quantities, rescue team members shall practice donning and using pressure demand mode, self-contained breathing apparatuses monthly.

(e) The employer shall ensure that rescue teams are familiar with conditions at the jobsite.

(11) Hazardous classifications.

(a) Potentially gassy operations. Underground construction operations shall be classified as potentially gassy if either:

(i) Air monitoring discloses 10 percent or more of the lower explosive limit for methane or other flammable gases measured at 12 inches (304.8 mm) +/-0.25 inch (6.35 mm) from the roof, face, floor, or walls in any underground work area for more than a 24-hour period; or

(ii) The history of the geographical area or geological formation indicates that 10 percent or more of the lower explosive limit for methane or other flammable gases is likely to be encountered in such underground operations.

(b) Gassy operations. Underground construction operations shall be classified as gassy if:

(i) Air monitoring discloses 10 percent or more of the lower explosive limit for methane or other flammable gases measured at 12 inches (304.8 mm) +/-0.25 inch (6.35 mm) from the roof, face, floor, or walls in any underground work area for three consecutive days; or

(ii) There has been an ignition of methane or of other flammable gases emanating from the strata that indicates the presence of such gases; or

(iii) The underground construction operation is both connected to an underground work area which is currently classified as gassy and is also subject to a continuous course of air containing the flammable gas concentration.

(c) Declassification to potentially gassy operations. Underground construction gassy operations may be declassified to potentially gassy when air monitoring results remain under 10 percent of the lower explosive limit for methane or other flammable gases for three consecutive days.

(12) Gassy operations-Additional requirements. Only acceptable equipment, maintained in suitable condition, shall be used in gassy operations.

WAC 296-155-730 (Cont.)

(a) Mobile diesel-powered equipment used in gassy operations shall be either approved in accordance with the requirements of 30 CFR Part 36 (formerly Schedule 31) by MSHA, or shall be demonstrated by the employer to be fully equivalent to such MSHA-approved equipment, and shall be operated in accordance with that part.

(b) Each entrance to a gassy operation shall be prominently posted with signs notifying all entrants of the gassy classification.

(c) Smoking shall be prohibited in all gassy operations and the employer shall be responsible for collecting all personal sources of ignition, such as matches and lighters, from all persons entering a gassy operation.

(d) A fire watch as described in chapter 296-155 WAC, Part H, shall be maintained when hot work is performed.

(e) Once an operation has met the criteria in subsection (11)(a)(i) of this section, warranting classification as gassy, all operations in the affected area, except the following, shall be discontinued until the operation either is in compliance with all of the gassy operation requirements or has been declassified in accordance with (c) of this subsection:

(i) Operations related to the control of the gas concentration;

(ii) Installation of new equipment, or conversion of existing equipment, to comply with this subsection; and

(iii) Installation of above-ground controls for reversing the air flow.

(13) Air quality and monitoring.

(a) General. Air quality limits and control requirements specified in chapter 296-62 WAC, Part H, shall apply except as modified by this subsection.

(b) The employer shall assign a competent person who shall perform all air monitoring required by this section.

(c) Where this section requires monitoring of airborne contaminants “as often as necessary,” the competent person shall make a reasonable determination as to which substances to monitor and how frequently to monitor, considering at least the following factors:

(i) Location of jobsite: Proximity to fuel tanks, sewers, gas lines, old landfills, coal deposits, and swamps;

(ii) Geology: Geological studies of the jobsite, particularly involving the soil type and its permeability;

(iii) History: Presence of air contaminants in nearby jobsites, changes in levels of substances monitored on the prior shift; and

WAC 296-155-730 (Cont.)

(iv) Work practices and jobsite conditions: The use of diesel engines, use of explosives, use of fuel gas, volume and flow of ventilation, visible atmospheric conditions, decompression of the atmosphere, welding, cutting and hot work, and employees' physical reactions to working underground.

(d) The employer shall provide testing and monitoring instruments which are capable of achieving compliance with the provisions of this subsection, and:

(i) Shall maintain the testing and monitoring instruments in good condition;

(ii) Shall calibrate the instruments on a frequency not to exceed 6 months.

(e) Exposure to airborne contaminants shall not exceed the levels established by chapter 296-62 WAC, Part H.

(f) Respirators shall not be substituted for environmental control measures. However, where environmental controls have not yet been developed, or when necessary by the nature of the work involved (for example, welding, sand blasting, lead burning), an employee may work for short periods of time in concentrations of airborne contaminants which exceed the limit of permissible exposure referred to in (d) of this subsection, if the employee wears a respiratory protective device certified by MSHA-NIOSH for protection against the particular hazards involved, and the selection and use of respirators complies with the provisions of chapter 296-62 WAC, Part E.

(g) Employees shall be withdrawn from areas in which there is a concentration of an airborne contaminant which exceeds the permissible exposure limit listed for that contaminant, except as modified in (t)(i) and (ii) of this subsection.

(h) The atmosphere in all underground work areas shall be tested as often as necessary to assure that the atmosphere at normal atmospheric pressure contains at least 19.5 percent oxygen and no more than 22 percent oxygen.

(i) Tests for oxygen content shall be made before tests for air contaminants.

(j) Field-type oxygen analyzers, or other suitable devices, shall be used to test for oxygen deficiency.

(k) The atmosphere in all underground work areas shall be tested quantitatively for carbon monoxide, nitrogen dioxide, hydrogen sulfide, and other toxic gases, dust, vapors, mists, and fumes as often as necessary to ensure that the permissible exposure limits prescribed in chapter 296-62 WAC, Part H, are not exceeded.

(l) The atmosphere in all underground work areas shall be tested quantitatively for methane and other flammable gases as often as necessary to determine:

(i) Whether action is to be taken under (q), (r), and (s) of this subsection; and

(ii) Whether an operation is to be classified potentially gassy or gassy under subsection (11) of this section.

(m) If diesel-engine or gasoline-engine driven ventilating fans or compressors are used, an initial test shall be made of the inlet air of the fan or compressor, with the engines operating, to ensure that the air supply is not contaminated by engine exhaust.

WAC 296-155-730 (Cont.)

(n) Testing shall be performed as often as necessary to ensure that the ventilation requirements of subsection (15) of this section are met.

(o) When rapid excavation machines are used, a continuous flammable gas monitor shall be operated at the face with the sensor(s) placed as high and close to the front of the machine's cutter head as practicable.

(p) Whenever air monitoring indicates the presence of 5 ppm or more of hydrogen sulfide, a test shall be conducted in the affected underground work area(s), at least at the beginning and midpoint of each shift, until the concentration of hydrogen sulfide has been less than 5 ppm for 3 consecutive days.

(i) Whenever hydrogen sulfide is detected in an amount exceeding 10 ppm, a continuous sampling and indicating hydrogen sulfide monitor shall be used to monitor the affected work area.

(ii) Employees shall be informed when a concentration of 10 ppm hydrogen sulfide is exceeded.

(iii) The continuous sampling and indicating hydrogen sulfide monitor shall be designed, installed, and maintained to provide a visual and aural alarm when the hydrogen sulfide concentration reaches 15 ppm to signal that additional measures, such as respirator use, increased ventilation, or evacuation, might be necessary to maintain hydrogen sulfide exposure below the permissible exposure limit.

(q) When the competent person determines, on the basis of air monitoring results or other information, that air contaminants may be present in sufficient quantity to be dangerous to life, the employer shall:

(i) Prominently post a notice at all entrances to the underground jobsite to inform all entrants of the hazardous condition; and

(ii) Immediately increase sampling frequency levels to insure workers are not exposed to identified contaminants in excess of the permissible exposure limit(s); and

(iii) Ensure that all necessary precautions are taken to comply with pertinent requirements of this section, and chapter 296-62 WAC.

(r) Whenever five percent or more of the lower explosive limit for methane or other flammable gases is detected in any underground work area(s) or in the air return, steps shall be taken to increase ventilation air volume or otherwise control the gas concentration, unless the employer is operating in accordance with the potentially gassy or gassy operation requirements. Such additional ventilation controls may be discontinued when gas concentrations are reduced below five percent of the lower explosive limit, but shall be reinstituted whenever the five percent level is exceeded.

(s) Whenever 10 percent or more of the lower explosive limit for methane or other flammable gases is detected in the vicinity of welding, cutting, or other hot work, such work shall be suspended until the concentration of such flammable gas is reduced to less than 10 percent of the lower explosive limit.

WAC 296-155-730 (Cont.)

(t) Whenever 20 percent or more of the lower explosive limit for methane or other flammable gases is detected in any underground work area(s) or in the air return:

(i) All employees, except those necessary to eliminate the hazard, shall be immediately withdrawn to a safe location above ground; and

(ii) Employees who remain underground to correct or eliminate the hazard described in (t) above shall be equipped with approved, pressure demand mode, self-contained breathing apparatus, and shall have received adequate training in the proper use of that equipment.

(iii) Electrical power, except for acceptable pumping and ventilation equipment, shall be cut off to the area endangered by the flammable gas until the concentration of such gas is reduced to less than 20 percent of the lower explosive limit.

(14) Additional monitoring for potentially gassy and gassy operations. Operations which meet the criteria for potentially gassy and gassy operations set forth in subsection (13) of this section shall be subject to the additional monitoring requirements of this subsection.

(a) A test for oxygen content shall be conducted in the affected underground work areas and work areas immediately adjacent to such areas at least at the beginning and midpoint of each shift.

(b) When using rapid excavation machines, continuous automatic flammable gas monitoring equipment shall be used to monitor the air at the heading, on the rib, and in the return air duct. The continuous monitor shall signal the heading, and shut down electric power in the affected underground work area, except for acceptable pumping and ventilation equipment, when 20 percent or more of the lower explosive limit for methane or other flammable gases is encountered.

(i) A manual flammable gas monitor shall be used as needed, but at least at the beginning and midpoint of each shift, to ensure that the limits prescribed in subsections (11) and (13) of this section are not exceeded. In addition, a manual electrical shut down control shall be provided near the heading.

(ii) Local gas tests shall be made prior to and continuously during any welding, cutting, or other hot work.

(iii) In underground operations driven by drill-and-blast methods, the air in the affected area shall be tested for flammable gas prior to re-entry after blasting, and continuously when employees are working underground.

(c) Recordkeeping. A record of all air quality tests shall be maintained above ground at the worksite and be made available to the director or his/her representatives upon request. The record shall include the location, date, time, substance and amount monitored. Records of exposures to toxic substances shall be retained in accordance with Part B, chapter 296-62 WAC. All other air quality test records shall be retained until completion of the project.

(15) Ventilation.

(a) (i) Fresh air shall be supplied to all underground work areas in sufficient quantities to prevent dangerous or harmful accumulation of dust, fumes, mists, vapors, or gases.

WAC 296-155-730 (Cont.)

(ii) Mechanical ventilation shall be provided in all underground work areas except when the employer can demonstrate that natural ventilation provides the necessary air quality through sufficient air volume and air flow.

(b) A minimum of 200 cubic feet (5.7 m3) of fresh air per minute shall be supplied for each employee underground.

(c) The linear velocity of air flow in the tunnel bore, in shafts, and in all other underground work areas shall be at least 30 feet (9.15 m) per minute where blasting or rock drilling is conducted, or where other conditions likely to produce dust, fumes, mists, vapors, or gases in harmful or explosive quantities are present.

(d) The direction of mechanical air flow shall be reversible.

(e) Air that has passed through underground oil or fuel-storage areas shall not be used to ventilate working areas.

(f) Following blasting, ventilation systems shall exhaust smoke and fumes to the outside atmosphere before work is resumed in affected areas.

(g) Ventilation doors shall be designed and installed so that they remain closed when in use, regardless of the direction of the air flow.

(h) When ventilation has been reduced to the extent that hazardous levels of methane or flammable gas may have accumulated, a competent person shall test all affected areas after ventilation has been restored and shall determine whether the atmosphere is within flammable limits before any power, other than for acceptable equipment, is restored or work is resumed.

(i) Whenever the ventilation system has been shut down with all employees out of the underground area, only competent persons authorized to test for air contaminants shall be allowed underground until the ventilation has been restored and all affected areas have been tested for air contaminants and declared safe.

(j) When drilling rock or concrete, appropriate dust control measures shall be taken to maintain dust levels within limits set in chapter 296-155 WAC, Part B-1. Such measures may include, but are not limited to, wet drilling, the use of vacuum collectors, and water mix spray systems.

(k) (i) Internal combustion engines, except diesel-powered engines on mobile equipment, are prohibited underground.

(ii) Mobile diesel-powered equipment used underground in atmospheres other than gassy operations shall be either approved by MSHA in accordance with the provisions of 30 CFR Part 32 (formerly Schedule 24), or shall be demonstrated by the employer to be fully equivalent to such MSHA-approved equipment, and shall be operated in accordance with that Part. (Each brake horsepower of a diesel engine requires at least 100 cubic feet (28.32 m3) of air per minute for suitable operation in addition to the air requirements for personnel. Some engines may require a greater amount of air to ensure that the allowable levels of carbon monoxide, nitric oxide, and nitrogen dioxide are not exceeded.)

WAC 296-155-730 (Cont.)

(iii) Application shall be made to the mining/explosives section, department of labor and industries, for permission to use specified diesel equipment in a specified underground area and shall include the following:

(A) The type of construction and complete identification data and specifications including analysis of the undiluted exhaust gases of the diesel equipment.

(B) The location where the diesel equipment is to be used.

(C) Before the diesel equipment is taken underground, written permission shall be obtained from the department of labor and industries or its duly authorized representative. A satisfactory test on surface, to show that the exhaust gases do not exceed the maximum percentage of carbon monoxide permitted, shall be required.

(D) Diesel equipment shall only be used underground where the ventilation is controlled by mechanical means and shall not be operated if the ventilating current is less than 100 CFM per horsepower based on the maximum brake horsepower of the engines.

(E) Air measurements shall be made at least once daily in the diesel engine working area and the measurements entered in the Underground Diesel Engine Record Book. Permissible maximum amounts of noxious gases are as follows:

At engine exhaust ports	Carbon Monoxide	.10%	1,000 pm[3]
Next to equipment	Carbon Monoxide	.0035%	35 ppm
General atmosphere	Carbon Monoxide	.0035%	35 ppm
General atmosphere	Nitrogen Dioxide	.0001%	1 ppm
General atmosphere	Aldehydes	.0002%	2 ppm

[3]Parts of vapor or gas per million parts of contaminated air by volume at 25°C and 760 mm Hg. pressure.

(l) Potentially gassy or gassy operations shall have ventilation systems installed which shall:

(i) Be constructed of fire-resistant materials; and

(ii) Have acceptable electrical systems, including fan motors.

(m) Gassy operations shall be provided with controls located aboveground for reversing the air flow of ventilation systems.

(n) In potentially gassy or gassy operations, wherever mine-type ventilation systems using an offset main fan installed on the surface are used, they shall be equipped with explosion-doors or a weak-wall having an area at least equivalent to the cross-sectional area of the airway.

(16) Illumination.

(a) Sufficient lighting shall be provided, in accordance with the requirements of chapter 296-155 WAC, Part B-1, to permit safe operations at the face as well as in the general tunnel or shaft area and at the employees' workplace.

WAC296-155-730 (Cont.)

(b) Only acceptable portable lighting shall be used within 50 feet (15.24 m) of any underground heading during explosive handling.

(17) Fire prevention and control. Fire prevention and protection requirements applicable to underground construction operations are found in Part D of this chapter except as modified by the following additional standards.

(a) Open flames and fires are prohibited in all underground construction operations except as permitted for welding, cutting, and other hot work operations.

(i) Smoking may be allowed only in areas free of fire and explosion hazards.

(ii) Readily visible signs prohibiting smoking and open flames shall be posted in areas having fire or explosion hazards.

(iii) The carrying of matches, lighters, or other flame-producing smoking materials shall be prohibited in all underground operations where fire or explosion hazards exist.

(b) The employer may store underground no more than a 24-hour supply of diesel fuel for the underground equipment used at the worksite.

(c) The piping of diesel fuel from the surface to an underground location is permitted only if:

(i) Diesel fuel is contained at the surface in a tank whose maximum capacity is no more than the amount of fuel required to supply for a 24-hour period the equipment serviced by the underground fueling station; and

(ii) The surface tank is connected to the underground fueling station by an acceptable pipe or hose system that is controlled at the surface by a valve, and at the shaft bottom by a hose nozzle; and

(iii) The pipe is empty at all times except when transferring diesel fuel from the surface tank to a piece of equipment in use underground; and

(iv) Hoisting operations in the shaft are suspended during refueling operations if the supply piping in the shaft is not protected from damage.

(d) (i) Gasoline shall not be carried, stored, or used underground.

(ii) Acetylene, liquefied petroleum gas, and methylacetylene propadiene stabilized gas may be used underground only for welding, cutting and other hot work, and only in accordance with Part H of this chapter and subsections (13), (15), (17), and (18) of this section.

(e) Oil, grease, and diesel fuel stored underground shall be kept in tightly sealed containers in fire-resistant areas at least 300 feet (91.44 m) from underground explosive magazines, and at least 100 feet (30.48 m) from shaft stations and steeply inclined passageways. Storage areas shall be positioned or diked so that the contents of ruptured or overturned containers will not flow from the storage area.

WAC 296-155-730 (Cont.)

(f) Flammable or combustible materials shall not be stored above ground within 100 feet (30.48 m) of any access opening to any underground operation. Where this is not feasible because of space limitations at the jobsite, such materials may be located within the 100-foot limit, provided that:

(i) They are located as far as practicable from the opening; and

(ii) Either a fire-resistant barrier of not less than one-hour rating is placed between the stored material and the opening, or additional precautions are taken which will protect the materials from ignition sources.

(g) Fire-resistant hydraulic fluids shall be used in hydraulically-actuated underground machinery and equipment unless such equipment is protected by a fire suppression system or by multipurpose fire extinguisher(s) rated at a sufficient capacity for the type and size of hydraulic equipment involved, but rated at least 4A:4OB:C.

(h) (i) Electrical installations in underground areas where oil, grease, or diesel fuel are stored shall be used only for lighting fixtures.

(ii) Lighting fixtures in storage areas, or within 25 feet (7.62 m) of underground areas where oil, grease, or diesel fuel are stored, shall be approved for Class I, Division 2 locations, in accordance with Part I of this chapter.

(i) Leaks and spills of flammable or combustible fluids shall be cleaned up immediately.

(j) A fire extinguisher of at least 4A:4OB:C rating or other equivalent extinguishing means shall be provided at the head pulley and at the tail pulley of underground belt conveyors, and at 300-foot intervals along the belt.

(k) Any structure located underground or within 100 feet (30.48 m) of an opening to the underground shall be constructed of material having a fire-resistance rating of at least one hour.

(18) Welding, cutting, and other hot work. In addition to the requirements of Part H of this chapter, the following requirements shall apply to underground welding, cutting, and other hot work.

(a) No more than the amount of fuel gas and oxygen cylinders necessary to perform welding, cutting, or other hot work during the next 24-hour period shall be permitted underground.

(b) Noncombustible barriers shall be installed below welding, cutting, or other hot work being done in or over a shaft or raise.

(19) Ground support.

(a) In tunnels (other than hard rock) timber sets, steel rings, steel frames, concrete liners, or other engineered tunnel support systems shall be used. Every tunnel support system shall be designed by a licensed professional engineer. Design specifications shall be available at the worksite.

(b) Portal areas. Portal openings and access areas shall be guarded by shoring, fencing, head walls, shotcreting, or other equivalent protection to ensure safe access of employees and equipment. Adjacent areas shall be scaled or otherwise secured to prevent loose soil, rock, or fractured materials from endangering the portal and access area.

WAC 296-155-730 (Cont.)

(c) Subsidence areas. The employer shall ensure ground stability in hazardous subsidence areas by shoring, by filling in, or by erecting barricades and posting warning signs to prevent entry.

(d) Underground areas.

(i) (A) A competent person shall inspect the roof, face, and walls of the work area at the start of each shift and as often as necessary to determine ground stability.

(B) Competent persons conducting such inspections shall be protected from loose ground by location, ground support, or equivalent means.

(ii) Ground conditions along haulageways and travelways shall be inspected as frequently as necessary to ensure safe passage.

(iii) Loose ground that might be hazardous to employees shall be taken down, scaled, or supported.

(iv) Torque wrenches shall be used wherever bolts that depend on torsionally applied force are used for ground support.

(v) A competent person shall determine whether rock bolts meet the necessary torque, and shall determine the testing frequency in light of the bolt system, ground conditions, and the distance from vibration sources.

(vi) Suitable protection shall be provided for employees exposed to the hazard of loose ground while installing ground support systems.

(vii) Support sets shall be installed so that the bottoms have sufficient anchorage to prevent ground pressures from dislodging the support base of the sets. Lateral bracing (collar bracing, tie rods, or spreaders) shall be provided between immediately adjacent sets to ensure added stability.

(viii) Damaged or dislodged ground supports that create a hazardous condition shall be promptly repaired or replaced. When replacing supports, the new supports shall be installed before the damaged supports are removed.

(ix) A shield or other type of support shall be used to maintain a safe travelway for employees working in dead-end areas ahead of any support replacement operation.

(e) Shafts.

(i) Shafts and wells over 4 feet (1.219 m) in depth that employees must enter shall be supported by a steel casing, concrete pipe, timber, solid rock, or other suitable material.

(ii) (A) The full depth of the shaft shall be supported by casing or bracing except where the shaft penetrates into solid rock having characteristics that will not change as a result of exposure. Where the shaft passes through earth into solid rock, or through solid rock into earth, and where there is potential for shear, the casing or bracing shall extend at least 5 feet (1.53 m) into the solid rock. When the shaft terminates in solid rock, the casing or bracing shall extend to the end of the shaft or 5 feet (1.53 m) into the solid rock, whichever is less.

WAC 296-155-730 (Cont.)

(B) The casing or bracing shall extend 42 inches (1.07 m) plus or minus 3 inches (8 cm) above ground level, except that the minimum casing height may be reduced to 12 inches (0.3 m), provided that a standard railing is installed; that the ground adjacent to the top of the shaft is sloped away from the shaft collar to prevent entry of liquids; and that effective barriers are used to prevent mobile equipment operating near the shaft from jumping over the 12-inch (0.3 m) barrier.

(iii) After blasting operations in shafts, a competent person shall determine if the walls, ladders, timbers, blocking, or wedges have loosened. If so, necessary repairs shall be made before employees other than those assigned to make the repairs are allowed in or below the affected areas.

(f) Blasting. This subsection applies in addition to the requirements for blasting and explosives operations, including handling of misfires, which are found in chapter 296-52 WAC.

(i) Blasting wires shall be kept clear of electrical lines, pipes, rails, and other conductive material, excluding earth, to prevent explosives initiation or employee exposure to electric current.

(ii) Following blasting, an employee shall not enter a work area until the air quality meets the requirements of subsection (13) of this section.

(g) Drilling.

(i) A competent person shall inspect all drilling and associated equipment prior to each use. Equipment defects affecting safety shall be corrected before the equipment is used.

(ii) The drilling area shall be inspected for hazards before the drilling operation is started.

(iii) Employees shall not be allowed on a drill mast while the drill bit is in operation or the drill machine is being moved.

(iv) When a drill machine is being moved from one drilling area to another, drill steel, tools, and other equipment shall be secured and the mast shall be placed in a safe position.

(v) Receptacles or racks shall be provided for storing drill steel located on jumbos.

(vi) Employees working below jumbo decks shall be warned whenever drilling is about to begin.

(vii) Drills on columns shall be anchored firmly before starting drilling, and shall be retightened as necessary thereafter.

(viii) The employer shall provide mechanical means on the top deck of a jumbo for lifting unwieldy or heavy material.

(ix) When jumbo decks are over 10 feet (3.05 m) in height, the employer shall install stairs wide enough for two persons.

WAC 296-155-730 (Cont.)

(x) Jumbo decks more than 10 feet (3.05 m) in height shall be equipped with guardrails on all open sides, excluding access openings of platforms, unless an adjacent surface provides equivalent fall protection.

(xi) Only employees assisting the operator shall be allowed to ride on jumbos, unless the jumbo meets the requirements of subsection (20)(e) of this section.

(xii) Jumbos shall be chocked to prevent movement while employees are working on them.

(xiii) Walking and working surfaces of jumbos shall be maintained to prevent the hazards of slipping, tripping, and falling.

(xiv) Jumbo decks and stair treads shall be designed to be slip-resistant and secured to prevent accidental displacement.

(xv) Scaling bars shall be available at scaling operations and shall be maintained in good condition at all times. Blunted or severely worn bars shall not be used.

(xvi) Before commencing the drill cycle, the face and lifters shall be examined for misfires (residual explosives) and, if found, they shall be removed before drilling commences at the face. Blasting holes shall not be drilled through blasted rock (muck) or water.

(xvii) Employees in a shaft shall be protected either by location or by suitable barrier(s) if powered mechanical loading equipment is used to remove muck containing unfired explosives.

(xviii) A caution sign reading “buried line,” or similar wording shall be posted where air lines are buried or otherwise hidden by water or debris.

(20) Haulage.

(a) A competent person shall inspect haulage equipment before each shift.

(i) Equipment defects affecting safety and health shall be corrected before the equipment is used.

(ii) Powered mobile haulage equipment shall be provided with adequate brakes.

(iii) Power mobile haulage equipment, including trains, shall have audible warning devices to warn employees to stay clear. The operator shall sound the warning device before moving the equipment and whenever necessary during travel.

(iv) The operator shall assure that lights which are visible to employees at both ends of any mobile equipment, including a train, are turned on whenever the equipment is operating.

(v) In those cabs where glazing is used, the glass shall be safety glass, or its equivalent, and shall be maintained and cleaned so that vision is not obstructed.

WAC 296-155-730 (Cont.)

(b) Antirollback devices or brakes shall be installed on inclined conveyor drive units to prevent conveyors from inadvertently running in reverse. Employees shall not be permitted to ride a power-driven chain, belt, or bucket conveyor unless the conveyor is specifically designed for the transportation of persons.

(c) Endless belt-type manlifts are prohibited in underground construction.

(d) General requirements also applicable to underground construction for use of conveyors in construction are found in chapter 296-155 WAC, Part L.

(e) No employee shall ride haulage equipment unless it is equipped with seating for each passenger and protects passengers from being struck, crushed, or caught between other equipment or surfaces. Members of train crews may ride on a locomotive if it is equipped with handholds and nonslip steps or footboards. Requirements applicable to underground construction for motor vehicle transportation of employees are found in chapter 296-155 WAC, Part M.

(f) Conveyor lockout.

(i) Conveyors shall be de-energized and locked out with a padlock, and tagged out with a "Do Not Operate" tag at any time repair, maintenance, or clean-up work is being performed on the conveyor.

(ii) Tags or push button stops are not acceptable.

(iii) Persons shall not be allowed to walk on conveyors except for emergency purposes and then only after the conveyor has been deenergized and locked out in accordance with (f) above, and persons can do so safely.

(g) Powered mobile haulage equipment, including trains, shall not be left unattended unless the master switch or motor is turned off; operating controls are in neutral or park position; and the brakes are set, or equivalent precautions are taken to prevent rolling.

(h) Whenever rails serve as a return for a trolley circuit, both rails shall be bonded at every joint and crossbonded every 200 feet (60.96 m).

(i) When dumping cars by hand, the car dumps shall have tiedown chains, bumper blocks, or other locking or holding devices to prevent the cars from overturning.

(j) Rocker-bottom or bottom-dump cars shall be equipped with positive locking devices to prevent unintended dumping.

(k) Equipment to be hauled shall be loaded and secured to prevent sliding or dislodgment.

(l) (i) Mobile equipment, including rail-mounted equipment, shall be stopped for manual connecting or service work, and;

(ii) Employees shall not reach between moving cars during coupling operations.

(iii) Couplings shall not be aligned, shifted, or cleaned on moving cars or locomotives.

WAC 296-155-730 (Cont.)

(iv) Safety chains or other connections shall be used in addition to couplers to connect person cars or powder cars whenever the locomotive is uphill of the cars.

(v) When the grade exceeds one percent and there is a potential for runaway cars, safety chains or other connections shall be used in addition to couplers to connect haulage cars or, as an alternative, the locomotive must be downhill of the train.

(vi) Such safety chains or other connections shall be capable of maintaining connection between cars in the event of either coupler disconnect, failure or breakage.

(m) Parked rail equipment shall be chocked, blocked, or have brakes set to prevent inadvertent movement.

(n) Berms, bumper blocks, safety hooks, or equivalent means shall be provided to prevent overtravel and overturning of haulage equipment at dumping locations.

(o) Bumper blocks or equivalent stopping devices shall be provided at all track dead ends.

(p) (i) Only small handtools, lunch pails, or similar small items may be transported with employees in person cars, or on top of a locomotive.

(ii) When small hand tools or other small items are carried on top of a locomotive, the top shall be designed or modified to retain them while traveling.

(q) (i) Where switching facilities are available, occupied personnel cars shall be pulled, not pushed. If personnel cars must be pushed and visibility of the track ahead is hampered, then a qualified person shall be stationed in the lead car to give signals to the locomotive operator.

(ii) Crew trips shall consist of personnel loads only.

(21) Electrical safety. This subsection applies in addition to the general requirements for electrical safety which are found in Part I of this chapter.

(a) Electric power lines shall be insulated or located away from water lines, telephone lines, air lines, or other conductive materials so that a damaged circuit will not energize the other systems.

(b) Lighting circuits shall be located so that movement of personnel or equipment will not damage the circuits or disrupt service.

(c) Oil-filled transformers shall not be used underground unless they are located in a fire-resistant enclosure suitably vented to the outside and surrounded by a dike to retain the contents of the transformers in the event of rupture.

(22) Hoisting unique to underground construction except as modified by this section, the following provisions of chapter 296-155 WAC, Part L apply: Requirements for cranes are found in WAC 296-155-525. WAC 296-155-528 contains rules applicable to crane hoisting of personnel, except, that the limitations imposed by WAC 296-155-528(2) do not apply to the routine access of employees to the underground via a shaft. Requirements for personnel hoists, material hoists, and elevators are found in WAC 296-155-530 and in this subsection.

WAC 296-155-730 (Cont.)

(a) General requirements for cranes and hoists.

(i) Materials, tools, and supplies being raised or lowered, whether within a cage or otherwise, shall be secured or stacked in a manner to prevent the load from shifting, snagging, or falling into the shaft.

(ii) A warning light suitably located to warn employees at the shaft bottom and subsurface shaft entrances shall flash whenever a load is above the shaft bottom or subsurface entrances, or the load is being moved in the shaft. This subsection does not apply to fully enclosed hoistways.

(iii) Whenever a hoistway is not fully enclosed and employees are at the shaft bottom, conveyances or equipment shall be stopped at least 15 feet (4.57 m) above the bottom of the shaft and held there until the signalperson at the bottom of the shaft directs the operator to continue lowering the load, except that the load may be lowered without stopping if the load or conveyance is within full view of a bottom signalperson who is in constant voice communication with the operator.

(iv) (A) Before maintenance, repairs, or other work is commenced in the shaft served by a cage, skip, or bucket, the operator and other employees in the area shall be informed and given suitable instructions.

(B) A sign warning that work is being done in the shaft shall be installed at the shaft collar, at the operator's station, and at each underground landing.

(v) Any connection between the hoisting rope and the cage or skip shall be compatible with the type of wire rope used for hoisting.

(vi) Spin-type connections, where used, shall be maintained in a clean condition and protected from foreign matter that could affect their operation.

(vii) Cage, skip, and load connections to the hoist rope shall be made so that the force of the hoist pull, vibration, misalignment, release of lift force, or impact will not disengage the connection. Only closed shackles shall be used for cage and skip rigging.

(viii) When using wire rope wedge sockets, means shall be provided to prevent wedge escapement and to ensure that the wedge is properly seated.

(b) Additional requirements for cranes. Cranes shall be equipped with a limit switch to prevent overtravel at the boom tip. Limit switches are to be used only to limit travel of loads when operational controls malfunction and shall not be used as a substitute for other operational controls.

(c) Additional requirements for hoists.

(i) Hoists shall be designed so that the load hoist drum is powered in both directions of rotation, and so that brakes are automatically applied upon power release or failure.

(ii) Control levers shall be of the “deadman type” which return automatically to their center (neutral) position upon release.

WAC 296-155-730 (Cont.)

(iii) When a hoist is used for both personnel hoisting and material hoisting, load and speed ratings for personnel and for materials shall be assigned to the equipment.

(iv) Hoist machines with cast metal parts shall not be used.

(v) Material hoisting may be performed at speeds higher than the rated speed for personnel hoisting if the hoist and components have been designed for such higher speeds and if shaft conditions permit.

(vi) Employees shall not ride on top of any cage, skip, or bucket except when necessary to perform inspection or maintenance of the hoisting system, in which case they shall be protected by a body belt/harness system to prevent falling.

(vii) Personnel and materials (other than small tools and supplies secured in a manner that will not create a hazard to employees) shall not be hoisted together in the same conveyance. However, if the operator is protected from the shifting of materials, then the operator may ride with materials in cages or skips which are designed to be controlled by an operator within the cage or skip.

(viii) Line speed shall not exceed the design limitations of the systems.

(ix) Hoists shall be equipped with landing level indicators at the operator's station. Marking of the hoist rope does not satisfy this requirement.

(x) Whenever glazing is used in the hoist house, it shall be safety glass, or its equivalent, and be free of distortions and obstructions.

(xi) A fire extinguisher that is rated at least 2A:10B:C (multipurpose, dry chemical) shall be mounted in each hoist house.

Note: For additional requirements relating to portable fire extinguishers see WAC 296-800-300.

(xii) Hoist controls shall be arranged so that the operator can perform all operating cycle functions and reach the emergency power cutoff without having to reach beyond the operator's normal operating position.

(xiii) Hoists shall be equipped with limit switches to prevent overtravel at the top and bottom of the hoistway.

(xiv) Limit switches are to be used only to limit travel of loads when operational controls malfunction and shall not be used as a substitute for other operational controls.

(xv) Hoist operators shall be provided with a closed-circuit voice communication system to each landing station, with speaker-microphones so located that the operator can communicate with individual landing stations during hoist use.

(xvi) When sinking shafts 75 feet (22.86 m) or less in depth, cages, skips, and buckets that may swing, bump, or snag against shaft sides or other structural protrusions shall be guided by fenders, rails, ropes, or a combination of those means.

WAC 296-155-730 (Cont.)

(xvii) When sinking shafts more than 75 feet (22.86 m) in depth, all cages, skips, and buckets shall be rope or rail-guided to within a rail length from the sinking operation.

(xviii) Cages, skips, and buckets in all completed shafts, or in all shafts being used as completed shafts, shall be rope or rail-guided for the full length of their travel.

(xix) Wire rope used in load lines of material hoists shall be capable of supporting, without failure, at least five times the maximum intended load or the factor recommended by the rope manufacturer, whichever is greater. Refer to chapter 296-155 WAC, Part L, for design factors for wire rope used in personnel hoists. The design factors shall be calculated by dividing the breaking strength of wire rope, as reported in the manufacturer's rating tables, by the total static load, including the weight of the wire rope in the shaft when fully extended.

(xx) A competent person shall visually check all hoisting machinery, equipment, anchorages, and hoisting rope at the beginning of each shift and during hoist use, as necessary.

(xxi) Each safety device shall be checked by a competent person at least weekly during hoist use to ensure suitable operation and safe condition.

(xxii) In order to ensure suitable operation and safe condition of all functions and safety devices, each hoist assembly shall be inspected and load-tested to 100 percent of its rated capacity: At the time of installation; after any repairs or alterations affecting its structural integrity; after the operation of any safety device; and annually when in use. The employer shall prepare a certification record which includes the date each inspection and load-test was performed; the signature of the person who performed the inspection and test; and a serial number or other identifier for the hoist that was inspected and tested. The most recent certification record shall be maintained on file until completion of the project.

(xxiii) Before hoisting personnel or material, the operator shall perform a test run of any cage or skip whenever it has been out of service for one complete shift, and whenever the assembly or components have been repaired or adjusted.

(xiv) Unsafe conditions shall be corrected before using the equipment.

(d) Additional requirements for personnel hoists.

(i) Hoist drum systems shall be equipped with at least two means of stopping the load, each of which shall be capable of stopping and holding 150 percent of the hoist's rated line pull. A broken-rope safety, safety catch, or arrestment device is not a permissible means of stopping under this subsection.

(ii) The operator shall remain within sight and sound of the signals at the operator's station.

(iii) All sides of personnel cages shall be enclosed by one-half inch (12.70 mm) wire mesh (not less than No. 14 gauge or equivalent) to a height of not less than 6 feet (1.83 m). However, when the cage or skip is being used as a work platform, its sides may be reduced in height to 42 inches (1.07 m) when the conveyance is not in motion.

WAC 296-155-730 (Cont.)

(iv) All personnel cages shall be provided with a positive locking door that does not open outward.

(v) All personnel cages shall be provided with a protective canopy. The canopy shall be made of steel plate, at least 3/16 -inch (4.763 mm) in thickness, or material of equivalent strength and impact resistance. The canopy shall be sloped to the outside, and so designed that a section may be readily pushed upward to afford emergency egress. The canopy shall cover the top in such a manner as to protect those inside from objects falling in the shaft.

(vi) Personnel platforms operating on guide rails or guide ropes shall be equipped with broken-rope safety devices, safety catches, or arrestment devices that will stop and hold 150 percent of the weight of the personnel platform and its maximum rated load.

(vii) During sinking operations in shafts where guides and safeties are not yet used, the travel speed of the personnel platform shall not exceed 200 feet (60.96 m) per minute. Governor controls set for 200 feet (60.96 m) per minute shall be installed in the control system and shall be used during personnel hoisting.

(viii) The personnel platform may travel over the controlled length of the hoistway at rated speeds up to 600 feet (182.88 m) per minute during sinking operations in shafts where guides and safeties are used.

(ix) The personnel platform may travel at rated speeds greater than 600 feet (182.88 m) per minute in complete shafts.

[Statutory Authority: RCW 49.17.010, .040, .050. 99-10 (Order 98-10), § 296-155-730, filed 05/04/99, effective 09/01/99. Statutory Authority: Chapter 49.17.010, .040, .050, .060 RCW. 98-05-046 (Order 97-10) § 296-155-730, filed 2/13/98, effective 4/15/98. Chapter 49.17 RCW. 95-04-007, 296-155-730, filed 1/18/95, effective 3/1/95; 94-15-096 (Order 94-07), § 296-155-730, filed 7/20/94, effective 9/20/94; 91-11-070 (Order 91-01), § 296-155-730, filed 5/20/91, effective 6/20/91; 90-03-029 (Order 89-20), § 296-155-730, filed 1/11/90, effective 2/26/90. Statutory Authority: RCW 49.17.040 and 49.17.050. 86-03-074 (Order 86-14), § 296-155-730, filed 1/21/86; Order 76-29, § 296-155-730, filed 9/30/76; Order 74-26, § 296-155-730, filed 5/7/74, effective 6/6/74.]

WAC 296-155-735 Caissons.

(1) Wherever, in caisson work in which compressed air is used, and the working chamber is less than 11 feet in length, and when such caissons are at any time suspended or hung while work is in progress so that the bottom of the excavation is more than 9 feet below the deck of the working chamber, a shield shall be erected therein for the protection of the employees.

(2) Shafts shall be subjected to a hydrostatic or airpressure test, at which pressure they shall be tight. The shaft shall be stamped on the outside shell about 12 inches from each flange to show the pressure to which they have been subjected.

(3) Whenever a shaft is used, it shall be provided, where space permits, with a safe, proper, and suitable staircase for its entire length, including landing platforms, not more than 20 feet apart. Where this is impracticable, suitable ladders shall be installed with landing platforms located about 20 feet apart to break the climb.

(4) All caissons, having a diameter or side greater than 10 feet shall be provided with a man lock and shaft for the exclusive use of employees.

WAC 296-155-735 (Cont.)

(5) In addition to the gauge in the locks, an accurate gauge shall be maintained on the outer and inner side of each bulkhead. These gauges shall be accessible at all times and kept in accurate working order.

(6) In caisson operations where employees are exposed to compressed air working environments, the requirements contained in WAC 296-155-745 shall be complied with.

[Order 74-26, § 296-155-735, filed 5/7/74, effective 6/6/74.]

WAC 296-155-740 Cofferdams.

(1) If overtopping of the cofferdam by high waters is possible, means shall be provided for controlled flooding of the work area.

(2) Warning signals for evacuation of employees in case of emergency shall be developed and posted.

(3) Cofferdam walkways, bridges, or ramps with at least two means of rapid exit, shall be provided with guardrails as specified in Part K of this chapter.

(4) Manways and ladderways shall be installed separately from the hoistways and partitioned off to prevent hoisted materials from protruding into or falling into manways and/or ladderways.

(5) Pumping equipment shall be located on substantially constructed platforms and where installed in such a position that persons must work below, toe boards shall be installed on the platform.

(6) Cofferdams located close to navigable shipping channels shall be protected from vessels in transit, where possible.

[Statutory Authority: Chapter 49.17 RCW. 96-24-051, (Order 96-05), § 296-155-740, filed 11/27/96, effective 02/01/97. 95-10-016, § 296-155-740, filed 4/25/95, effective 10/1/95; Order 74-26, § 296-155-740, filed 5/7/74, effective 6/6/74.]

WAC 296-155-745 Compressed air.

(1) General provisions.

(a) There shall be present, at all times, at least one competent person designated by and representing the employer, who shall be familiar with this part in all respects and responsible for full compliance with these and other applicable parts.

(b) Every employee shall be instructed in the rules and regulations which concern their safety or the safety of others.

(2) Medical attendance, examination, and regulations.

(a) There shall be retained one or more licensed physicians familiar with and experienced in the physical requirements and the medical aspects of compressed air work and the treatment of decompression illness. They shall be available at all times while work is in progress in order to provide medical supervision of employees employed in compressed air work. They shall be physically qualified and be willing to enter a pressurized environment.

(b) No employee shall be permitted to enter a compressed air environment until they have been examined by the physician and reported to be physically qualified to engage in such work.

WAC 296-155-745 (Cont.)

(c) In the event an employee is absent from work for 10 days, or is absent due to sickness or injury, they shall not resume work until they are reexamined by the physician, and their physical condition reported, as provided in this subsection, to be such as to permit them to work in compressed air.

(d) After an employee has been employed continuously in compressed air for a period designated by the physician, but not to exceed 1 year, the employee shall be reexamined by the physician to determine if they are still physically qualified to engage in compressed air work.

(e) Such physician shall at all times keep a complete and full record of examinations made by themselves. The physician shall also keep an accurate record of any decompression illness or other illness or injury incapacitating any employee for work, and of all loss of life that occurs in the operation of a tunnel, caisson, or other compartment in which compressed air is used.

(f) Records shall be available for the inspection by the director or his/her representatives, and a copy thereof shall be forwarded to the department within 48 hours following the occurrence of the accident, death, injury, or decompression illness. It shall state as fully as possible the cause of said death or decompression illness, and the place where the injured or sick employee was taken, and such other relative information as may be required by the director.

(g) A fully equipped first-aid station shall be provided at each tunnel project regardless of the number of persons employed. An ambulance or transportation suitable for a litter case shall be at each project.

(h) Where tunnels are being excavated from portals more than 5 road miles apart, a first-aid station and transportation facilities shall be provided at each portal.

(i) A medical lock shall be established and maintained in immediate working order whenever air pressure in the working chamber is increased above the normal atmosphere.

(j) The medical lock shall:

(i) Have at least 6 feet of clear headroom at the center, and be subdivided into not less than two compartments;

(ii) Be readily accessible to employees working under compressed air;

(iii) Be kept ready for immediate use for at least 5 hours subsequent to the emergence of any employee from the working chamber;

(iv) Be properly heated, lighted and ventilated;

(v) Be maintained in a sanitary condition;

(vi) Have a nonshatterable port through which the occupant(s) may be kept under constant observation;

(vii) Be designed for a working pressure of 75 p.s.i.g.;

WAC 296-155-745 (Cont.)

(viii) Be equipped with internal controls which may be overridden by external controls;

(ix) Be provided with air pressure gauges to show the air pressure within each compartment to observers inside and outside the medical lock;

(x) Be equipped with a manual type sprinkler system that can be activated inside the lock or by the outside lock tender;

(xi) Be provided with oxygen lines and fittings leading into external tanks. The lines shall be fitted with check valves to prevent reverse flow. The oxygen system inside the chamber shall be of a closed circuit design and be so designed as to automatically shut off the oxygen supply whenever the fire system is activated.

(xii) Be in constant charge of an attendant under the direct control of the retained physician. The attendant shall be trained in the use of the lock and suitably instructed regarding steps to be taken in the treatment of employee exhibiting symptoms compatible with a diagnosis of decompression illness;

(xiii) Be adjacent to an adequate emergency medical facility;

(xiv) The medical facility shall be equipped with demand-type oxygen inhalation equipment approved by the U.S. Bureau of Mines or Mine Safety and Health Administration (MSHA) and the National Institute for Occupational Safety and Health (NIOSH);

(xv) Be capable of being maintained at a temperature, in use, not to exceed 90°F. nor be less than 70°F.; and

(xvi) Be provided with sources of air, free of oil and carbon monoxide, for normal and emergency use, which are capable of raising the air pressure in the lock from 0 to 75 p.s.i.g. in 5 minutes.

(k) Identification badges shall be furnished to all employees, indicating that the wearer is a compressed air worker. A permanent record shall be kept of all identification badges issued. The badge shall give the employee's name, address of the medical lock, the telephone number of the licensed physician for the compressed air project, and contain instructions that in case of emergency of unknown or doubtful cause or illness, the wearer shall be rushed to the medical lock. The badge shall be worn at all times-off the job, as well as on the job.

(3) Telephone and signal communication. Effective and reliable means of communication, such as bells, whistles, or telephones, shall be maintained at all times between all the following locations;

(a) The working chamber face;

(b) The working chamber side of the man lock near the door;

(c) The interior of the man lock;

(d) Lock attendant's station;

(e) The compressor plant;

WAC 296-155-745 (Cont.)

(f) The first-aid station;

(g) The emergency lock (if one is required); and

(h) The special decompression chamber (if one is required).

(4) Signs and records.

(a) The time of decompression shall be posted in each man lock as follows:

TIME OF DECOMPRESSION FOR THIS LOCK

. . . . . pounds to . . . . . pounds in . . . . . minutes.
. . . . . pounds to . . . . . pounds in . . . . . minutes.

(Signed by)_____
(Superintendent)

This form shall be posted in the man lock at all times.

(b) Any code of signals used shall be conspicuously posted near workplace entrances and such other locations as may be necessary to bring them to the attention of all employees concerned.

(c) For each 8-hour shift, a record of employees employed under air pressure shall be kept by an employee who shall remain outside the lock near the entrance. This record shall show the period each employee spends in the air chamber and the time taken from decompression. A copy shall be submitted to the appointed physician after each shift.

(5) Compression.

(a) Every employee going under air pressure for the first time shall be instructed on how to avoid excessive discomfort.

(b) During the compression of employees, the pressure shall not be increased to more than 3 p.s.i.g. within the first minute. The pressure shall be held at 3 p.s.i.g. and again at 7 p.s.i.g. sufficiently long to determine if any employees are experiencing discomfort.

(c) After the first minute the pressure shall be raised uniformly and at a rate not to exceed 10 p.s.i. per minute.

(d) If any employee complains of discomfort, the pressure shall be held to determine if the symptoms are relieved. If, after 5 minutes the discomfort does not disappear, the lock attendant shall gradually reduce the pressure until the employee signals that the discomfort has ceased. If the employee does not indicate that the discomfort has disappeared, the lock attendant shall reduce the pressure to atmospheric and the employee shall be released from the lock.

(e) No employee shall be subjected to pressure exceeding 50 pounds per square inch except in an emergency.

WAC 296-155-745 (Cont.)

(6) Decompression.

(a) Decompression to normal condition shall be in accordance with the decompression tables in Appendix A of this part.

(b) In the event it is necessary for an employee to be in compressed air more than once in a 24-hour period, the appointed physician shall be responsible for the establishment of methods and procedures of decompression applicable to repetitive exposures.

(c) If decanting is necessary, the appointed physician shall establish procedures before any employee is permitted to be decompressed by decanting methods. The period of time that the employees spend at atmospheric pressure between the decompression following the shift and recompression shall not exceed 5 minutes.

(7) Man locks and special decompression chambers.

(a) Man locks.

(i) Except in emergency, no employees employed in compressed air shall be permitted to pass from the working chamber to atmospheric pressure until after decompression, in accordance with the procedures in this part.

(ii) The lock attendant in charge of a man lock shall be under the direct supervision of the appointed physician. The lock attendant shall be stationed at the lock controls on the free air side during the period of compression and decompression and shall remain at the lock control station whenever there are persons in the working chamber or in the man lock.

(iii) Except where air pressure in the working chamber is below 12 p.s.i.g., each man lock shall be equipped with automatic controls which, through taped programs, cams, or similar apparatus, shall automatically regulate decompressions. It shall also be equipped with manual controls to permit the lock attendant to override the automatic mechanism in the event of an emergency, as provided in item (viii) of this subdivision.

(iv) A manual control, which can be used in the event of an emergency, shall be placed inside the man lock.

(v) A clock, thermometer, and continuous recording pressure gauge with a 4-hour graph shall be installed outside of each man lock and shall be changed prior to each shift's decompression. The chart shall be of sufficient size to register a legible record of variations in pressure within the man lock and shall be visible to the lock attendant. A copy of each graph shall be submitted to the appointed physician after each shift. In addition, a pressure gauge, clock, and thermometer shall also be installed in each man lock. Additional fittings shall be provided so that the test gauges may be attached whenever necessary.

(vi) Except where air pressure is below 12 p.s.i.g. and there is no danger of rapid flooding, all caissons having a working area greater than 150 square feet, and each bulkhead in tunnels of 14 feet or more in diameter, or equivalent area, shall have at least two locks in perfect working condition, one of which shall be used exclusively as a man lock, the other, as a materials lock.

WAC 296-155-745 (Cont.)

(vii) Where only a combination man-and-materials lock is required, this single lock shall be of sufficient capacity to hold the employees constituting two successive shifts.

(viii) Emergency locks shall be large enough to hold an entire heading shift and a limit maintained of 12 p.s.i.g. There shall be a chamber available for oxygen decompression therapy to 28 p.s.i.g.

(ix) The man lock shall be large enough so that those using it are not compelled to be in a cramped position and shall not have less than 5 feet clear head room at the center and a minimum of 30 cubic feet of air space per occupant.

(x) Locks on caissons shall be so located that the bottom door shall be not less than 3 feet above the water level surrounding the caisson on the outside. (The water level, where it is affected by tides, is construed to mean high tide.)

(xi) In addition to the pressure gauge in the locks, an accurate pressure gauge shall be maintained on the outer and inner side of each bulkhead. These gauges shall be accessible at all times and shall be kept in accurate working order.

(xii) Man locks shall have an observation port at least 4 inches in diameter located in such a position that all occupants of the man lock may be observed from the working chamber and from the free air side of the lock.

(xiii) Adequate ventilation in the lock shall be provided.

(xiv) Man locks shall be maintained at a minimum temperature of 70°F.

(xv) When locks are not in use and employees are in the working chamber, lock doors shall be kept open to the working chamber, where practicable.

(xvi) Provision shall be made to allow for rescue parties to enter the tunnel if the working force is disabled.

(xvii) A special decompression chamber of sufficient size to accommodate the entire force of employees being decompressed at the end of a shift shall be provided whenever the regularly established working period requires total time of decompression exceeding 75 minutes.

(b) Special decompression chamber.

(i) The headroom in the special decompression chamber shall be not less than a minimum 7 feet and the cubical content shall provide at least 50 cubic feet of airspace for each employee. For each occupant, there shall be provided 4 square feet of free walking area and 3 square feet of seating space, exclusive of area required for lavatory and toilet facilities. The rated capacity shall be based on the stated minimum space per employee and shall be posted at the chamber entrance. The posted capacity shall not be exceeded, except in case of emergency.

(ii) Each special decompression chamber shall be equipped with the following:

WAC 296-155-745 (Cont.)

(A) A clock or clocks suitably placed so that the attendant and the chamber occupants can readily ascertain the time;

(B) Pressure gauges which will indicate to the attendants and to the chamber occupants the pressure in the chamber;

(C) Valves to enable the attendant to control the supply and discharge of compressed air into and from the chamber.

(D) Valves and pipes, in connection with the air supply and exhaust, arranged so that the chamber pressure can be controlled from within and without;

(E) Effective means of oral intercommunication between the attendant, occupants of the chamber, and the air compressor plant; and

(F) An observation port at the entrance to permit observation of the chamber occupants.

(iii) Seating facilities in special decompression chambers shall be so arranged as to permit a normal sitting posture without cramping. Seating space, not less than 18 inches by 24 inches wide, shall be provided per occupant.

(iv) Adequate toilet and washing facilities, in a screened or enclosed recess, shall be provided. Toilet bowls shall have a built-in protector on the rim so that an air space is created when the seat lid is closed.

(v) Fresh and pure drinking water shall be available. This may be accomplished by either piping water into the special decompression chamber and providing drinking fountains, or by providing individual canteens, or by some other sanitary means. Community drinking vessels are prohibited.

(vi) No refuse or discarded material of any kind shall be permitted to accumulate, and the chamber shall be kept clean.

(vii) Unless the special decompression chamber is serving as the man lock to atmospheric pressure, the special decompression chamber shall be situated, where practicable, adjacent to the man lock on the atmospheric pressure side of the bulkhead. A passageway shall be provided, connecting the special chamber with the man lock, to permit employees in the process of decompression to move from the man lock to the special chamber without a reduction in the ambient pressure from that designated for the next stage of decompression. The passageway shall be so arranged as to not interfere with the normal operation of the man lock, nor with the release of the occupants of the special chamber to atmospheric pressure upon the completion of the decompression procedure.

(8) Compressor plant and air supply.

(a) At all times there shall be a thoroughly experienced, competent, and reliable person on duty at the air control valves as a gauge tender who shall regulate the pressure in the working areas. During tunneling operations, one gauge tender may regulate the pressure in not more than two headings: Provided; That the gauges and controls are all in one location. In caisson work, there shall be a gauge tender for each caisson.

WAC 296-155-745 (Cont.)

(b) The low air compressor plant shall be of sufficient capacity to not only permit the work to be done safely, but shall also provide a margin to meet emergencies and repairs.

(c) Low air compressor units shall have at least two independent and separate sources of power supply and each shall be capable of operating the entire low air plant and its accessory systems.

(d) The capacity, arrangement, and number of compressors shall be sufficient to maintain the necessary pressure without overloading the equipment and to assure maintenance of such pressure in the working chamber during periods of breakdown, repair, or emergency.

(e) Switching from one independent source of power supply to the other shall be done periodically to ensure that workability of the apparatus in an emergency.

(f) Duplicate low-pressure air feedlines and regulating valves shall be provided between the source of air supply and a point beyond the locks with one of the lines extending to within 100 feet of the working face.

(g) All high-pressure and low-pressure air supply lines shall be equipped with check valves.

(h) Low-pressure air shall be regulated automatically. In addition, manually operated valves shall be provided for emergency conditions.

(i) The air intakes for all air compressors shall be located at a place where fumes, exhaust gases, and other air contaminants will be at a minimum.

(j) Gauges indicating the pressure in the working chamber shall be installed in the compressor building, the lock attendant's station, and at the employer's field office.

(9) Ventilation and air quality.

(a) Exhaust valves and exhaust pipes shall be provided and operated so that the working chamber shall be well ventilated, and there shall be no pockets of dead air. Outlets may be required at intermediate points along the main low-pressure air supply line to the heading to eliminate such pockets of dead air. The quantity of ventilation air shall be not less than 30 cubic feet per minute.

(b) The air in the workplace shall be analyzed by the employer not less than once each shift, and records of such tests shall be kept on file at the place where the work is in progress. The test results shall be within the threshold limit values specified in part B of this chapter, for hazardous gases, and within 10 percent of the lower explosive limit of flammable gases. If these limits are not met, immediate action to correct the situation shall be taken by the employer.

(c) The temperature of all working chambers which are subjected to air pressure shall, by means of after-coolers or other suitable devices, be maintained at a temperature not to exceed 85°F.

(d) Forced ventilation shall be provided during decompression. During the entire decompression period, forced ventilation through chemical or mechanical air purifying devices that will ensure a source of fresh air shall be provided.

(e) Whenever heat-producing machines (moles, shields) are used in compressed air tunnel operations, a positive means of removing the heat build-up at the heading shall be provided.

WAC 296-155-745 (Cont.)

(10) Electricity.

(a) All lighting in compressed-air chambers shall be by electricity exclusively, and two independent electric-lighting systems with independent sources of supply shall be used. The emergency source shall be arranged to become automatically operative in the event of failure of the regularly used source.

(b) The minimum intensity of light on any walkway, ladder, stairway, or working level shall be not less than 10 foot-candles, and in all workplaces the lighting shall at all times be such as to enable employees to see clearly.

(c) All electrical equipment, and wiring for light and power circuits, shall comply with requirements of Part I, of this standard, for use in damp, hazardous, high temperature, and compressed air environments.

(d) External parts of lighting fixtures and all other electrical equipment, when within 8 feet of the floor, shall be constructed of noncombustible, nonabsorptive, insulating materials, except that metal may be used if it is effectively grounded.

(e) Portable lamps shall be equipped with noncombustible, nonabsorptive, insulating sockets, approved handles, basket guards, and approved cords.

(f) The use of worn or defective portable and pendant conductors is prohibited.

(11) Sanitation.

(a) Sanitary, heated, lighted, and ventilated dressing rooms and drying rooms shall be provided for all employees engaged in compressed air work. Such rooms shall contain suitable benches and lockers. Bathing accommodations (showers at the ratio of one to 10 employees per shift), equipped with running hot and cold water, and suitable and adequate toilet accommodations, shall be provided. One toilet for each 15 employees, or fractional part thereof, shall be provided.

(b) When the toilet bowl is shut by a cover, there should be an air space so that the bowl or bucket does not implode when pressure is increased.

(c) All parts of caissons and other working compartments shall be kept in a sanitary condition.

(12) Fire prevention and protection.

(a) Fire fighting equipment shall be available at all times and shall be maintained in working condition.

(b) While welding or flame-cutting is being done in compressed air, a firewatch with a fire hose or approved extinguisher shall stand by until such operation is completed.

(c) Shafts and caissons containing flammable material of any kind, either above or below ground, shall be provided with a waterline and a fire hose connected thereto, so arranged that all points of the shaft or caisson are within reach of the hose stream.

WAC 296-155-745 (Cont.)

(d) Fire hose shall be at least 1 1/2 inches in nominal diameter; the water pressure shall at all times be adequate for efficient operation of the type of nozzle used; and the water supply shall be such as to ensure an uninterrupted flow. Fire hose, when not in use, shall be located or guarded to prevent injury thereto.

(e) The power house, compressor house, and all buildings housing ventilating equipment, shall be provided with at least one hose connection in the waterline, with a fire hose connected thereto. A fire hose shall be maintained within reach of structures of wood over or near shafts.

(f) Tunnels shall be provided with a 2-inch minimum diameter waterline extending into the working chamber and to within 100 feet of the working face. Such line shall have hose outlets with 100 feet of fire hose attached and maintained as follows: One at the working face; one immediately inside of the bulkhead of the working chamber; and one immediately outside such bulkhead. In addition, hose outlets shall be provided at 200-foot intervals throughout the length of the tunnel, and 100 feet of fire hose shall be attached to the outlet nearest to any location where flammable material is being kept or stored or where any flame is being used.

(g) In addition to fire hose protection required by this part, on every floor of every building not under compressed air, but used in connection with the compressed air work, there shall be provided at least one approved fire extinguisher of the proper type for the hazards involved. At least two approved fire extinguishers shall be provided in the working chamber as follows: One at the working face and one immediately inside the bulkhead (pressure side). Extinguishers in the working chamber shall use water as the primary extinguishing agent and shall not use any extinguishing agent which could be harmful to the employees in the working chamber. The fire extinguisher shall be protected from damage.

(h) Highly combustible materials shall not be used or stored in the working chamber. Wood, paper, and similar combustible material shall not be used in the working chamber in quantities which could cause a fire hazard. The compressor building shall be constructed of noncombustible material.

(i) Man locks shall be equipped with a manual type fire extinguisher system that can be activated inside the man lock and also by the outside lock attendant. In addition, a fire hose and portable fire extinguisher shall be provided inside and outside the man lock. The portable fire extinguisher shall be the dry chemical type.

Note: For additional requirements relating to portable fire extinguishers see WAC 296-800-300.

(j) Equipment, fixtures, and furniture in man locks and special decompression chambers shall be constructed of noncombustible materials. Bedding, etc., shall be chemically treated so as to be fire resistant.

(k) Head frames shall be constructed of structural steel or open frame-work fireproofed timber. Head houses and other temporary surface buildings or structures within 100 feet of the shaft, caisson, or tunnel opening shall be built of fire-resistant materials.

(l) No oil, gasoline, or other combustible materials shall be stored within 100 feet of any shaft, caisson, or tunnel opening, except that oils may be stored in suitable tanks in isolated fireproof buildings, provided such buildings are not less than 50 feet from any shaft, caisson, or tunnel opening, or any building directly connected thereto.

(m) Positive means shall be taken to prevent leaking flammable liquids from flowing into the areas specifically mentioned in the preceding subdivision.

WAC 296-155-745 (Cont.)

(n) All explosives used in connection with compressed air work shall be selected, stored, transported, and used as specified in part T of this chapter.

(13) Bulkheads and safety screens.

(a) Intermediate bulkheads with locks, or intermediate safety screens or both, are required where there is danger of rapid flooding.

(b) In tunnels 16 feet or more in diameter, hanging walkways shall be provided from the face to the man lock as high in the tunnel as practicable, with at least 6 feet of head room. Walkways shall be constructed of noncombustible material. Standard railings shall be securely installed throughout the length of all walkways on open sides in accordance with Part K of this chapter. Where walkways are ramped under safety screens, the walkway surface shall be skidproofed by cleats or by equivalent means.

(c) Bulkheads used to contain compressed air shall be tested, where practicable, to prove their ability to resist the highest air pressure which may be expected to be used.

[Statutory Authority: Chapter 49.17 RCW. 96-24-051, (Order 96-05), § 296-155-745, filed 11/27/96, effective 02/01/97. 95-10-016, § 296-155-745, filed 4/25/95, effective 10/1/95; 94-15-096 (Order 94-07), § 296-155-745, filed 7/20/94, effective 9/20/94; 88-23-054 (Order 88-25), § 296-155-745, filed 11/14/88; Order 74-26, § 296-155-745, filed 5/7/74, effective 6/6/74.]

WAC 296-155-74501 Appendix A-Decompression tables.

APPENDIX A-DECOMPRESSION TABLES

(1) **Explanation.** The decompression tables are computed for working chamber pressures from 0 to 14 pounds, and from 14 to 50 pounds per square inch gauge inclusive by 2-pound increments and for exposure times for each pressure extending from one-half to over 8 hours inclusive. Decompressions will be conducted by two or more stages with a maximum of four stages, the latter for a working chamber pressure of 40 pounds per square inch gauge or over. Stage 1 consists of a reduction in ambient pressure ranging from 10 to a maximum of 16 pounds per square inch, but in no instance will the pressure be reduced below 4 pounds at the end of stage 1. This reduction in pressure in stage 1 will always take place at a rate not greater than 5 pounds per minute.

Further reduction in pressure will take place during stage 2 and subsequent stages as required at a slower rate, but in no event at a rate greater than 1 pound per minute.

Decompression Table No. 1 indicates in the body of the table the total decompression time in minutes for various combinations of working chamber pressure and exposure time.

Decompression Table No. 2 indicates for the same various combinations of working chamber pressure and exposure time the following:

(a) The number of stages required;

(b) The reduction in pressure and the terminal pressure for each required stage;

(c) The time in minutes through which the reduction in pressure is accomplished for each required stage;

WAC 296-155-74501 (Cont.)

(d) The pressure reduction rate in minutes per pound for each required stage;

Important Note: The pressure reduction in each stage is accomplished at a uniform rate. Do not interpolate between values shown on the tables. Use the next higher value of working chamber pressure or exposure time should the actual working chamber pressure or the actual exposure time, respectively, fall between those for which calculated values are shown in the body of the tables.

Examples:

Example No. 1:

4 hours working period at 20 pounds gauge.	
Decompression Table No. 1:	
20 pounds for 4 hours, total decompression time.	43 minutes.
Decompression Table No. 2:	
Stage 1: Reduce pressure from 20 pounds to 4 pounds at the uniform rate of 5 pounds per minute.	
Elapsed time stage 1: 16/5-	3 minutes.
Stage 2 (final stage): Reduce pressure at a uniform rate from 4 pounds to 0-pound gage over a period of 40 minutes.	
Rate-0.10 per pound per minute or 10 minutes per pound.	
Stage 2 (final) elapsed time.	40 minutes.

Total time	43 minutes

Example No. 2:

5-hour working period at 24 pounds gage.	
Decompression Table No. 1:	
24 pounds for 5 hours, total decompression time.	117 minutes.
Decompression Table No. 2:	
Stage 1: Reduce pressure from 24 pounds to 8 pounds at the uniform rate of 5 pounds per minute.	
Elapsed time stage 1: 16/5	3 minutes.
Stage 2: Reduce pressure at a uniform rate from 8 pounds to 4 pounds over a period of 4 minutes.	
Rate, 1 pound per minute elapsed time, stage 2	4 minutes.
Transfer person to special decompression chamber maintaining the 4-pound pressure during the transfer operation.	
Stage 3 (final stage): In the special decompression chamber, reduce the pressure at a uniform rate from 4 pounds to 0-pound gage over a period of 110 minutes. Rate, 0.037 pound per minute or 27.5 minutes per pound. Stage 3 (final) elapsed time . . .	110 minutes.

Total time	117 minutes.

WAC 296-155-74501 (Cont.)

DECOMPRESSION TABLE NO. 1
TABLE DECOMPRESSION TIME

Work pressure	Working period hours										
Over p.s.i.g.	1/2	1	1 1/2	2	3	4	5	6	7	8	8
0-12	3	3	3	3	3	3	3	3	3	3	3
14	6	6	6	6	6	6	6	6	16	16	33
16	7	7	7	7	7	7	17	33	48	48	62
18	7	7	7	8	11	17	48	63	63	73	87
20	7	7	8	15	15	43	63	73	83	103	113
22	9	9	16	24	38	68	93	103	113	128	133
24	11	12	23	27	52	92	117	122	127	137	151
26	13	14	29	34	69	104	126	141	142	142	163
28	15	23	31	41	98	127	143	153	153	165	183
30	17	28	38	62	105	143	165	168	178	188	204
32	19	35	43	85	126	163	178	193	203	213	226
34	21	39	58	98	151	178	195	218	223	233	248
36	24	44	63	113	170	198	223	233	243	253	273
38	28	49	73	128	178	203	223	238	253	263	278
40	31	49	84	143	183	213	233	248	258	278	288
42	37	56	102	144	189	215	245	260	263	268	293
44	43	64	118	154	199	234	254	264	269	269	293
46	44	74	139	171	214	244	269	274	289	299	318
48	51	89	144	189	229	269	299	309	319	319	...
50	58	94	164	209	249	279	309	329	...	...	...

WAC 296-155-74501 (Cont.)

DECOMPRESSION TABLE NO. 2
(Do not interpolate, use next higher value
for conditions not computed.)

					Decompression data		
Working chamber pressure P.s.i.g.	Working period Hours	Stage No.	Pressure reduction P.s.i.g. ---------- From	To	Time in stage Minutes Min/Pound	Pressure reduction rate	Total time de-compress Minutes
14	1/2	1	14	4	2	0.20	6
		2	4	0	4	1.00	6
	1	1	14	4	2	0.20	6
		2	4	0	4	1.00	6
	1 1/2	1	14	4	2	0.20	6
		2	4	0	4	1.00	6
	2	1	14	4	2	0.20	6
		2	4	0	4	1.00	6
	3	1	14	4	2	0.20	6
		2	4	0	4	1.00	6
	4	1	14	0	2	0.20	6
		2	4	0	4	1.00	6
	5	1	14	4	2	0.20	6
		2	4	0	4	1.00	6
	6	1	14	4	2	0.20	
		2	4	0	4	1.00	6
	7	1	14	4	2	0.20	
		2	4	0	14	3.50	16
	8	1	14	4	2	0.20	
		2	4	0	14	3.50	16
	Over 8	1	14	4	2	0.20	
		2	4	0	30	7.50	32
16	1/2	1	16	4	3	0.20	
		2	4	0	4	1.00	7
	1	1	16	4	3	0.20	7
		2	4	0	4	1.00	7
	1 1/2	1	16	4	3	0.20	
		2	4	0	4	1.00	7
	2	1	16	4	3	0.20	
		2	4	0	4	1.00	7
	3	1	16	4	3	0.20	
		2	4	0	4	1.00	7
	4	1	14	4	3	0.20	
		2	4	0	4	1.00	7
	5	1	14	4		0.20	7
		2	4	0	4	3.50	17
	6	1	14	4	3	0.20	
		2	4	0	30	7.50	33

WAC 296-155-74501 (Cont.)

DECOMPRESSION TABLE NO. 2 (Cont.)
(Do not interpolate, use next higher value
for conditions not computed.)

Working chamber pressure P.s.i.g.	Working period Hours	Stage No.	Pressure reduction P.s.i.g. From	To	Decompression data: Time in stage Minutes Min/Pound	Pressure reduction rate	Total time de-compress Minutes
	7	1	14	4	3	0.20	
		2	4	0	45	11.25	48
	8	1	14	4	3	0.20	
		2	4	0	45	11.25	48
	Over 8	1	14	4	3	0.20	
		2	4	0	100	25.00	103
	Over 8	1	20	4	3	0.20	
		2	4	0	110	27.50	113
22	1/2	1	22	6	3	0.20	
		2	6	0	6	1.00	9
	1	1	22	6	3	0.20	
		2	6	0	6	1.00	9
	1 1/2	1	2	6	3	0.20	
		2	6	0	13	2.20	16
	2	1	22	6	3	0.20	
		2	6	0	21	3.50	24
	3	1	22	6	3	0.20	
		2	6	0	35	5.85	38
	4	1	22	6	3	0.20	
		2	6	0	65	10.83	68
	5	1	22	6	3	0.20	
		2	6	0	90	15.00	93
	6	1	22	6	3	0.20	
		2	6	0	100	16.67	103
	7	1	22	6	3	0.20	
		2	6	0	110	18.35	113
	8	1	22	6	3	0.20	
		2	6	0	125	20.80	128
	Over 8	1	22	6	3	0.20	
		2	6	0	130	21.70	133
24	1/2	1	24	8	3	0.20	
		2	8	4	4	1.00	
		3	4	0	4	1.00	11
	1	1	24	8	3	0.20	
		2	8	4	4	1.00	
		3	4	0	5	1.25	12
	1 1/2	1	2	8	3	0.20	
		2	8	4	4	1.00	

WAC 296-155-74501 (Cont.)

DECOMPRESSION TABLE NO. 2 (Cont.)
(Do not interpolate, use next higher value
for conditions not computed.)

		Decompression data					
Working chamber pressure P.s.i.g.	Working period Hours	Stage No.	Pressure reduction P.s.i.g. ---------- From	To	Time in stage Minutes Min/Pound	Pressure reduction rate	Total time de-compress Minutes
	2	1	24	8	3	0.20	
		2	8	4	4	1.00	
		3	4	0	20	5.00	27
		3	4	0	16	4.00	23
	3	1	24	8	3	0.20	
		2	8	4	4	1.00	
		3	4	0	45	11.25	52
	4	1	2	8	3	0.20	
		2	8	4	4	1.00	
		3	4	0	85	21.25	92
	5	1	2	8	3	0.20	
		2	8	4	4	1.00	
		3	4	0	110	27.50	117
	6	1	2	8	3	0.20	
		2	8	4	4	1.00	
		3	4	0	115	28.80	122
	7	1	24	8	3	0.20	
		2	8	4	4	1.00	
		3	4	0	120	30.00	127
	8	1	2	8	3	0.20	
		2	8	4	4	1.00	
		3	4	0	130	32.50	137
	Over 8	1	24	8	3	0.20	
		2	8	4	8	2.00	
		3	4	0	140	35.00	151
26	1/2	1	2	10	3	0.20	
		2	10	4	6	1.00	
		3	4	0	4	1.00	13
	1	1	2	10	3	0.20	
		2	10	4	6	1.00	
		3	4	0	5	1.25	14
	1 1/2	1	26	10	3	0.20	
		2	10	4	6	1.00	
		3	4	0	20	5.00	29
	2	1	2	10	3	0.20	
		2	10	4	6	1.00	
		3	4	0	25	6.25	34
	3	1	26	10	3	0.20	

WAC 296-155-74501 (Cont.)

DECOMPRESSION TABLE NO. 2 (Cont.)
(Do not interpolate, use next higher value
for conditions not computed.)

Working chamber pressure P.s.i.g.	Working period Hours	Stage No.	Decompression data: Pressure reduction P.s.i.g. From	To	Time in stage Minutes Min/Pound	Pressure reduction rate	Total time de-compress Minutes
		2	10	4	6	1.00	
		3	4	0	60	15.00	69
	4	1	26	10	3	0.20	
		2	10	4	6	1.00	
		3	4	0	95	23.75	104
	5	1	26	10	3	0.20	
		2	10	4	8	1.33	
		3	4	0	115	28.80	126
	6	1	26	10	3	0.20	
		2	10	4	8	1.33	
		3	4	0	130	32.50	141
	7	1	26	10	3	0.20	
		2	10	4	9	1.50	
		3	4	0	130	32.50	142
	8	1	26	10	3	0.20	
		2	10	4	9	1.50	
		3	4	0	130	32.50	142
	Over 8	1	26	10	3	0.20	
		2	10	4	30	5.00	
		3	4	0	130	32.50	163
28	1/2	1	28	12	3	0.20	
		2	12	4	8	1.00	
		3	4	0	4	1.00	15
	1	1	28	12	3	0.20	
		2	12	4	8	1.00	
		3	4	0	12	3.00	23
	1 1/2	1	28	12	3	0.20	
		2	12	4	8	1.00	
		3	4	0	20	5.00	31
	2	1	28	12	3	0.20	
		2	12	4	8	1.00	
		3	4	0	30	7.50	41
	3	1	28	12	3	0.20	
		2	12	4	10	1.25	
		3	4	0	85	21.20	98
	4	1	28	12	3	0.20	
		2	12	4	14	1.75	
		3	4	0	110	27.50	127

WAC 296-155-74501 (Cont.)

DECOMPRESSION TABLE NO. 2 (Cont.)
(Do not interpolate, use next higher value
for conditions not computed.)

			Decompression data				
Working chamber pressure P.s.i.g.	Working period Hours	Stage No.	Pressure reduction P.s.i.g. ---------- From	To	Time in stage Minutes Min/Pound	Pressure reduction rate	Total time de-compress Minutes
	5	1	28	12	3	0.20	
		2	12	4	20	2.50	
		3	4	0	120	30.00	143
	6	1	28	12	3	0.20	
		2	12	4	20	2.50	
		3	4	0	130	32.50	153
	7	1	28	12	3	0.20	
		2	12	4	20	2.50	
		3	4	0	130	32.50	153
	8	1	28	12	3	0.20	
		2	12	4	32	4.00	
		3	4	0	130	32.50	165
	Over 8	1	28	12	3	0.20	
		2	12	4	50	6.25	
		3	4	0	130	32.50	183
30	1/2	1	30	14	3	0.20	
		2	14	4	10	1.00	
		3	4	0	4	1.00	17
	1	1	30	14	3	0.20	
		2	14	4	10	1.00	
		3	4	0	15	3.75	28
	1 1/2	1	30	14	3	0.20	
		2	14	4	10	1.00	
		3	4	0	25	6.25	38
	2	1	30	14	3	0.20	
		2	14	4	14	1.40	
		3	4	0	45	11.25	62
	3	1	30	14	3	0.20	
		2	14	4	17	1.70	
		3	4	0	85	21.20	105
	4	1	30	14	3	0.20	
		2	14	4	30	3.00	
		3	4	0	110	27.50	143
	5	1	30	14	3	0.20	
		2	14	4	35	3.50	
		3	4	0	130	32.50	165
	6	1	30	14	3	0.20	
		2	14	4	35	3.50	

WAC 296-155-74501 (Cont.)

DECOMPRESSION TABLE NO. 2 (Cont.)
(Do not interpolate, use next higher value
for conditions not computed.)

Working chamber pressure P.s.i.g.	Working period Hours	Stage No.	Decompression data: Pressure reduction P.s.i.g. From	To	Time in stage Minutes Min/Pound	Pressure reduction rate	Total time de-compress Minutes
		3	4	0	130	32.50	168
	7	1	30	14	3	0.20	
		2	14	4	45	4.50	
		3	4	0	130	32.50	178
	8	1	30	14	3	0.20	
		2	14	4	55	5.50	
		3	4	0	130	32.50	188
	Over 8	1	30	14	3	0.20	
		2	14	4	71	7.10	
		3	4	0	130	32.50	204
32	1/2	1	32	16	3	0.20	
		2	16	4	12	1.00	
		3	4	0	4	1.00	19
	1	1	32	16	3	0.20	
		2	16	4	12	1.00	
		3	4	0	20	5.00	35
	1 1/2	1	32	16	3	0.20	
		2	16	4	15	1.25	
		3	4	0	25	6.25	43
	2	1	32	16	3	0.20	
		2	16	4	22	1.83	
		3	4	0	60	15.00	85
	3	1	32	16	3	0.20	
		2	16	4	28	2.33	
		3	4	0	95	23.75	126
	4	1	32	16	3	0.20	
		2	16	4	40	3.33	
		3	4	0	120	30.00	163
	5	1	32	16	3	0.20	
		2	16	4	45	3.75	
		3	4	0	130	32.50	178
	6	1	32	16	3	0.20	
		2	16	4	60	5.00	
		3	4	0	130	32.50	193
	7	1	32	16	3	0.20	
		2	16	4	70	5.83	
		3	4	0	130	32.50	203
	8	1	32	16	3	0.20	

WAC 296-155-74501 (Cont.)

DECOMPRESSION TABLE NO. 2 (Cont.)
(Do not interpolate, use next higher value
for conditions not computed.)

Working chamber pressure P.s.i.g.	Working period Hours	Stage No.	Decompression data: Pressure reduction P.s.i.g. From	To	Time in stage Minutes Min/Pound	Pressure reduction rate	Total time decompress Minutes
		2	16	4	80	6.67	
		3	4	0	130	32.50	213
	Over 8	1	32	16	3	0.20	
		2	16	4	93	7.75	
		3	4	0	130	32.50	226
34	1/2	1	34	18	3	0.20	
		2	18	4	14	1.00	
		3	4	0	4	1.00	21
	1	1	34	18	3	0.20	
		2	18	4	14	1.00	
		3	4	0	22	5.50	39
	1 1/2	1	34	18	3	0.20	
		2	18	4	25	1.80	
		3	4	0	30	7.50	58
	2	1	34	18	3	0.20	
		2	18	4	35	2.50	
		3	4	0	60	15.00	98
	3	1	34	18	3	0.20	
		2	18	4	43	3.10	
		3	4	0	105	26.25	151
	4	1	34	18	3	0.20	
		2	18	4	55	3.93	
		3	4	0	120	30.00	178
	5	1	34	18	3	0.20	
		2	18	4	62	4.43	
		3	4	0	130	32.50	195
	6	1	34	18	3	0.20	
		2	18	4	85	6.07	
		3	4	0	130	32.50	218
	7	1	34	18	3	0.20	
		2	18	4	90	6.43	
		3	4	0	130	32.50	223
	8	1	34	18	3	0.20	
		2	18	4	100	7.15	
		3	4	0	30	32.50	233
	Over 8	1	34	18	3	0.20	
		2	18	4	115	8.23	
		3	4	0	130	32.50	248

WAC 296-155-74501 (Cont.)

DECOMPRESSION TABLE NO. 2 (Cont.)
(Do not interpolate, use next higher value
for conditions not computed.)

Working chamber pressure P.s.i.g.	Working period Hours	Stage No.	Decompression data: Pressure reduction P.s.i.g. From	To	Time in stage Minutes Min/Pound	Pressure reduction rate	Total time de-compress Minutes
36	1/2	1	36	20	3	0.20	
		2	20	4	16	1.00	
		3	4	0	5	1.25	24
	1	1	36	20	3	0.20	
		2	20	4	16	1.00	
		3	4	0	25	6.25	44
	1 1/2	1	36	20	3	0.20	
		2	20	4	30	1.88	
		3	4	0	30	7.50	63
	2	1	36	20	3	0.20	
		2	20	4	40	2.50	
		3	4	0	70	17.50	113
	3	1	36	20	3	0.20	
		2	20	4	52	3.25	
		3	4	0	115	28.75	170
	4	1	36	20	3	0.20	
		2	20	4	65	4.06	
		3	4	0	130	32.50	198
	5	1	36	20	3	0.20	
		2	20	4	90	5.63	
		3	4	0	130	2.50	223
	6	1	36	20	3	0.20	
		2	20	4	100	6.25	
		3	4	0	130	32.50	233
	7	1	36	20	3	0.20	
		2	20	4	110	6.88	
		3	4	0	130	32.50	243
	8	1	36	20	3	0.20	
		2	20	4	120	7.50	
		3	4	0	130	32.50	253
	Over 8	1	36	20	3	0.20	
		2	20	4	140	8.75	
		3	4	0	130	32.50	273
38	1/2	1	38	22	3	0.20	
		2	22	6	16	1.00	
		3	6	0	9	1.50	28
	1	1	38	22	3	0.20	
		2	22	6	16	1.00	

WAC 296-155-74501 (Cont.)

DECOMPRESSION TABLE NO. 2 (Cont.)
(Do not interpolate, use next higher value
for conditions not computed.)

Working chamber pressure P.s.i.g.	Working period Hours	Stage No.	Decompression data: Pressure reduction P.s.i.g. From	To	Time in stage Minutes Min/Pound	Pressure reduction rate	Total time de-compress Minutes
		3	6	0	30	5.00	49
	1 1/2	1	38	22	3	0.20	
		2	22	6	20	1.25	
		3	6	0	50	8.34	73
	2	1	38	22	3	0.20	
		2	22	6	30	1.88	
		3	6	0	95	15.83	128
	3	1	38	22	3	0.20	
		2	22	6	35	2.19	
		3	6	0	140	23.35	178
	4	1	38	22	3	0.20	
		2	22	6	50	3.12	
		3	6	0	150	25.00	203
	5	1	38	22	3	0.20	
		2	22	6	55	3.44	
		3	6	0	165	27.50	223
	6	1	28	22	3	0.20	
		2	22	6	70	4.38	
		3	6	0	165	27.50	238
	7	1	38	22	3	0.20	
		2	22	6	85	5.32	
		3	6	0	165	27.50	253
	8	1	38	22	3	0.20	
		2	22	6	95	5.93	
		3	6	0	165	27.50	263
	Over 8	1	38	22	3	0.20	
		2	22	6	110	6.88	
		3	6	0	165	27.50	278
40	1/2	1	40	24	3	0.20	
		2	24	8	16	1.00	
		3	8	4	4	1.00	
		4	4	0	8	2.00	31
	1	1	40	24	3	0.20	
		2	24	8	16	1.00	
		3	8	4	5	1.25	
		4	4	0	25	6.25	49
	1 1/2	1	40	24	3	0.20	
		2	24	8	16	1.00	

WAC 296-155-74501 (Cont.)

DECOMPRESSION TABLE NO. 2 (Cont.)
(Do not interpolate, use next higher value
for conditions not computed.)

Working chamber pressure P.s.i.g.	Working period Hours	Stage No.	Decompression data: Pressure reduction P.s.i.g. From	To	Time in stage Minutes Min/Pound	Pressure reduction rate	Total time decompress Minutes
		3	8	4	20	5.00	
		4	4	0	45	11.25	84
	2	1	40	24	3	0.20	
		2	24	8	25	1.56	
		3	8	4	20	5.00	
		4	4	0	95	23.75	143
	3	1	40	24	3	0.20	
		2	24	8	30	1.88	
		3	8	4	30	7.50	
		4	4	0	120	30.00	183
	4	1	40	24	3	0.20	
		2	24	8	45	2.81	
		3	8	4	35	8.75	
		4	4	0	130	32.50	213
	5	1	40	24	3	0.20	
		2	24	8	47	2.94	
		3	8	4	53	13.25	
		4	4	0	130	32.50	233
	6	1	40	24	3	0.20	
		2	24	8	55	3.44	
		3	8	4	60	5.00	
		4	4	0	130	32.50	248
	7	1	40	24	3	0.20	
		2	24	8	65	4.06	
		3	8	4	60	15.00	
		4	4	0	130	32.50	258
	8	1	40	24	3	0.20	
		2	24	8	75	4.70	
		3	8	4	60	15.00	
		4	4	0	130	32.50	268
	Over 8	1	40	24	3	0.20	
		2	24	8	95	5.93	
		3	8	4	60	15.00	
		4	4	0	130	32.50	288
42	1/2	1	42	26	3	0.20	
		2	26	10	16	1.00	
		3	10	4	6	1.00	
		4	4	0	12	3.00	37

WAC 296-155-74501 (Cont.)

DECOMPRESSION TABLE NO. 2 (Cont.)
(Do not interpolate, use next higher value
for conditions not computed.)

Working chamber pressure P.s.i.g.	Working period Hours	Stage No.	Decompression data: Pressure reduction P.s.i.g. From	To	Time in stage Minutes Min/Pound	Pressure reduction rate	Total time de-compress Minutes
	1	1	42	26	3	0.20	
		2	26	10	16	1.00	
		3	10	4	12	2.00	
		4	4	0	25	6.25	56
	1 1/2	1	42	26	3	0.20	
		2	26	10	16	1.00	
		3	10	4	23	3.83	
		4	4	0	60	15.00	102
	2	1	42	26	3	0.20	
		2	26	10	16	1.00	
		3	10	4	30	5.00	
		4	4	0	95	23.75	144
	3	1	42	26	3	0.20	
		2	26	10	16	1.00	
		3	10	4	50	8.34	
		4	4	0	120	30.00	189
	4	1	42	26	3	0.20	
		2	26	10	17	1.06	
		3	10	4	65	10.83	
		4	4	0	130	32.50	215
	5	1	42	26	3	0.20	
		2	26	10	27	1.69	
		3	10	4	85	14.18	
		4	4	0	130	32.50	245
	6	1	42	26	3	0.20	
		2	26	10	27	1.69	
		3	10	4	100	16.67	
		4	4	0	130	32.50	260
	7	1	42	26	3	0.20	
		2	26	10	30	1.88	
		3	10	4	100	16.67	
		4	4	0	130	32.50	263
	8	1	42	26	3	0.20	
		2	26	10	35	2.19	
		3	10	4	100	16.67	
		4	4	0	130	32.50	268
	Over 8	1	42	26	3	0.20	
		2	26	10	60	3.75	

WAC 296-155-74501 (Cont.)

DECOMPRESSION TABLE NO. 2 (Cont.)
(Do not interpolate, use next higher value
for conditions not computed.)

Working chamber pressure P.s.i.g.	Working period Hours	Stage No.	Decompression data: Pressure reduction P.s.i.g. From	To	Time in stage Minutes Min/Pound	Pressure reduction rate	Total time de-compress Minutes
		3	10	4	100	16.67	
		4	4	0	130	32.50	293
44	1/2	1	44	28	3	0.20	
		2	28	12	16	1.00	
		3	12	4	8	1.00	
		4	4	0	16	4.00	43
	1	1	44	28	3	0.20	
		2	28	12	16	1.00	
		3	12	4	20	2.50	
		4	4	0	25	6.25	64
	1 1/2	1	44	28	3	0.20	
		2	28	12	16	1.00	
		3	12	4	27	3.38	
		4	4	0	72	18.00	118
	2	1	44	28	3	0.20	
		2	28	12	16	1.00	
		3	12	4	40	5.00	
		4	4	0	95	23.75	154
	3	1	44	28	3	0.20	
		2	28	12	16	1.00	
		3	12	4	60	7.50	
		4	4	0	120	30.00	199
	4	1	44	28	3	0.20	
		2	28	12	16	1.00	
		3	12	4	85	10.62	
		4	4	0	130	32.50	234
	5	1	44	28	3	0.20	
		2	28	12	16	1.00	
		3	12	4	105	13.13	
		4	4	0	130	32.50	254
	6	1	44	28	3	0.20	
		2	28	12	16	1.00	
		3	12	4	115	14.38	
		4	4	0	130	32.50	264
	7	1	44	28	3	0.20	
		2	28	12	16	1.00	
		3	12	4	120	15.00	
		4	4	0	130	32.50	269

WAC 296-155-74501 (Cont.)

DECOMPRESSION TABLE NO. 2 (Cont.)
(Do not interpolate, use next higher value
for conditions not computed.)

		Decompression data					
Working chamber pressure P.s.i.g.	Working period Hours	Stage No.	Pressure reduction P.s.i.g. ---------- From	To	Time in stage Minutes Min/Pound	Pressure reduction rate	Total time de-compress Minutes
	8	1	44	28	3	0.20	
		2	28	12	16	1.00	
		3	12	4	120	15.00	
		4	4	0	130	32.50	269
	Over 8	1	44	28	3	0.20	
		2	28	12	40	2.50	
		3	12	4	120	15.00	
		4	4	0	130	32.50	293
46	1/2	1	46	30	3	0.20	
		2	30	14	16	1.00	
		3	14	4	10	1.00	
		4	4	0	15	3.75	44
	1	1	46	30	3	0.20	
		2	30	14	16	1.00	
		3	14	4	25	2.50	
		4	4	0	30	7.50	74
	1 1/2	1	46	30	3	0.20	
		2	30	14	16	1.00	
		3	14	4	35	3.50	
		4	4	0	85	21.20	139
	2	1	46	30	3	0.20	
		2	30	14	16	1.00	
		3	14	4	47	4.70	
		4	4	0	105	26.25	171
	3	1	46	30	3	0.20	
		2	30	14	16	1.00	
		3	14	4	65	6.50	
		4	4	0	130	32.50	214
	4	1	46	30	3	0.20	
		2	30	14	16	1.00	
		3	14	4	95	9.50	
		4	4	0	130	32.50	244
	5	1	46	30	3	0.20	
		2	30	14	16	1.00	
		3	14	4	120	12.00	
		4	4	0	130	32.50	269
	6	1	46	30	3	0.20	
		2	30	14	16	1.00	

WAC 296-155-74501 (Cont.)

DECOMPRESSION TABLE NO. 2 (Cont.)
(Do not interpolate, use next higher value
for conditions not computed.)

Working chamber pressure P.s.i.g.	Working period Hours	Stage No.	Decompression data: Pressure reduction P.s.i.g. From	To	Time in stage Minutes Min/Pound	Pressure reduction rate	Total time de-compress Minutes
		3	14	4	125	12.50	
		4	4	0	130	32.50	274
	7	1	46	30	3	0.20	
		2	30	14	16	1.00	
		3	14	4	140	14.00	
		4	4	0	130	32.50	289
	8	1	46	30	3	0.20	
		2	30	14	16	1.00	
		3	14	4	150	15.00	
		4	4	0	130	32.50	299
	Over 8	1	46	30	3	0.20	
`		2	30	14	25	1.56	
		3	14	4	160	16.00	
		4	4	0	130	32.50	318
48	1/2	1	48	32	3	0.20	
		2	32	16	16	1.00	
		3	16	4	12	1.00	
		4	4	0	20	5.00	51
	1	1	48	32	3	0.20	
		2	32	16	16	1.00	
		3	16	4	35	2.92	
		4	4	0	35	8.75	89
	1 1/2	1	48	32	3	0.20	
		2	32	16	16	1.00	
		3	16	4	45	3.75	
		4	4	0	80	20.00	144
	2	1	48	32	3	0.20	
		2	32	16	16	1.00	
		3	16	4	60	5.00	
		4	4	0	110	27.50	189
	3	1	48	32	3	0.20	
		2	32	16	16	1.00	
		3	16	4	90	7.50	
		4	4	0	120	30.00	229
	4	1	48	32	3	0.20	
		2	32	16	16	1.00	
		3	16	4	120	10.00	
		4	4	0	130	32.50	269

WAC 296-155-74501 (Cont.)

DECOMPRESSION TABLE NO. 2 (Cont.)
(Do not interpolate, use next higher value
for conditions not computed.)

Working chamber pressure P.s.i.g.	Working period Hours	Stage No.	Decompression data: Pressure reduction P.s.i.g. From	To	Time in stage Minutes Min/Pound	Pressure reduction rate	Total time decompress Minutes
	5	1	48	32	3	0.20	
		2	32	16	16	1.00	
		3	16	4	140	11.67	
		4	4	0	130	32.50	299
	6	1	48	32	3	0.20	
		2	32	16	16	1.00	
		3	16	4	160	13.33	
		4	4	0	130	32.50	309
	7	1	48	32	3	0.20	
		2	32	16	16	1.00	
		3	16	4	170	14.17	
		4	4	0	130	32.50	319
	8	1	48	32	3	0.20	
		2	32	16	16	1.00	
		3	16	4	170	14.17	
		4	4	0	130	32.50	319
50	1/2	1	50	34	3	0.20	
		2	34	18	16	1.00	
		3	18	4	14	1.00	
		4	4	0	25	6.25	58
	1	1	50	34	3	0.20	
		2	34	18	16	1.00	
		3	18	4	40	2.86	
		4	4	0	35	8.75	94
	1 1/2	1	50	34	3	0.20	
		2	34	18	16	1.00	
		3	18	4	55	3.93	
		4	4	0	90	22.50	164
	2	1	50	34	3	0.20	
		2	34	18	16	1.00	
		3	18	4	70	5.00	
		4	4	0	120	30.00	209
	3	1	50	34	3	0.20	
		2	34	18	16	1.00	
		3	18	4	100	7.15	
		4	4	0	130	32.50	249
	4	1	50	34	3	0.20	

WAC 296-155-74501 (Cont.)

DECOMPRESSION TABLE NO. 2 (Cont.)
(Do not interpolate, use next higher value
for conditions not computed.)

		Decompression data					
Working chamber pressure P.s.i.g.	Working period Hours	Stage No.	Pressure reduction P.s.i.g. ---------- From	To	Time in stage Minutes Min/Pound	Pressure reduction rate	Total time de-compress Minutes
		2	34	18	16	1.00	
		3	18	4	130	8.58	
		4	4	0	130	32.50	279
	5	1	50	34	3	0.20	
		2	34	18	16	1.00	
		3	18	4	160	11.42	
		4	4	0	130	32.50	309
	6	1	50	34	3	0.20	
		2	34	18	16	1.00	
		3	18	4	180	12.85	
		4	4	0	130	32.50	329

[Statutory Authority: Chapter 49.17 RCW. 94-15-096 (Order 94-07), § 296-155-74501, filed 7/20/94, effective 9/20/94; Order 74-26, § 296-155-745 (part), Appendix A (codified as WAC 296-155-74501), filed 5/7/74, effective 6/6/74.]

PART R
MISCELLANEOUS CONSTRUCTION REQUIREMENTS

WAC 296-155-755 Roofing, insulating and waterproofing.

(1) Roofers hoisting jack shall be constructed to withstand the contemplated load to be hoisted. The beam from counter balance point to heel of jack shall be at least 3/4 the length of the entire beam.

(2) Hoisting jack shall be counterweighted with a minimum of three times the contemplated maximum load to be lifted. Counterweight shall be securely fastened to heel of jack to prevent displacement, or the jack shall be fastened by means of lashing, bolting, or other means to prevent displacement.

(3) A steel collar or U-bolt and shackle on head of the hoisting jack shall be provided for attachment of pulley.

(4) Hoisting pulleys shall be of steel construction.

(5) Where materials are hoisted by hand the hoist line shall be not less than five-eighths manila rope, or the equivalent. Where machine hoist is used the hoist line shall be wire rope.

(6) Hoisting hooks shall be of cast or forged steel heavy enough to prevent straightening under a load.

(7) Workers shall not stand under load when material or hot asphalt is being hoisted.

(8) Hot asphalt shall be kept at a safe level in buckets for carrying and hoisting.

(9) Service buckets of hot asphalt shall not be carried up ladders by workers.

(10) Service buckets shall be standard safety bucket or flatbottom bucket with bails fastened to an offset ear firmly riveted to side of bucket. There shall be a handle riveted near bottom of bucket for tipping purposes.

(11) Ladders shall extend at least 3 feet above the platform or roof served and shall be secured at top and bottom to prevent slipping.

(12) Safeguards shall be erected to prevent loads and lines contacting power lines where not possible to work in clear of power lines.

(13) Asphalt chunks shall not be thrown into hot tar pot, but shall be placed so as to prevent splashing of hot material.

(14) There shall be means to smother fires at fired tar pots.

(15) Mop or spud bar handles over three feet long shall be of wood or other nonconductive material.

(16) Persons working at kettles or handling hot tar shall, wear gloves and have arms fully protected.

(17) Open tar heating pots shall be kept outside of buildings.

Note: Electric type tar heating equipment may be used inside of the working enclosure provided that exhaust fans in connection with tubing, either rigid or flexible, capable of carrying fumes created by the heating process to the outside air are installed and in constant use during heating operations. The equipment should be provided with hinged lid or baffle plate for the purpose of immediate smothering of a pot fire.

WAC 296-155-755 (Cont.)

(18) While hot tar is being applied inside an enclosure, exhaust fans to supplement natural ventilation shall be installed to expedite removal of gaseous fumes from the building.

(19) Flame heated tar pots shall be prohibited on roofs of structures.

(20) Tar pots shall have an attendant at all times while in operation.

[Order 74-26, § 296-155-755, filed 5/7/74, effective 6/6/74.]

WAC 296-155-765 Rock crushing, gravel washing, and hot mix plants.

(1) Stationary dragline machines shall have all moving parts which are exposed to contact guarded with standard safeguards.

(a) All running lines, straps, etc., shall be regularly inspected and shall be changed when 10% of the wires in a 3 foot length are broken.

(b) Spars shall be properly guyed with a minimum of 5 top guys and where spar is over 50 feet in height, 3 buckle guys shall be used.

(c) A pass line shall be rigged on the spar to provide safe means of reaching top of spar.

(d) The head block shall be equipped with a safety strap attached to shell of the block and onto a guy wire leading away from the working area.

(2) Truck dump bunkers shall have wheel bumper block installed when dumping material from trucks.

(3) Substantial walkways and working platforms, equipped with toe boards and handrails shall be installed at all plants. Standard stairways and ladders shall be placed to reach all parts requiring oiling and maintenance.

(4) Plant structures shall be constructed to carry the required load, without material or structural failure, for the prescribed life of the material used.

(5) Bunker unloading devices shall be arranged to be operative from outside the walls of bunkers.

(6) Crusher operators and other employees working where hazardous dust or nuisance dust exists shall use approved respirators and goggles.

(7) All dusty rock crushing houses or other dusty places of employment, shall be equipped with means for controlling the dust.

(8) Cone type crushers shall be equipped with approved guards over or around the feed end to prevent rock from flying from crusher while in operation.

(9) All aggregate elevators, bucket or other type, shall have guards or barricades installed under or around return strand and of sufficient strength to sustain weight of piled up broken elevator equipment.

(10) All plant controls shall be placed so as to be readily accessible.

(11) Overhead conveyors shall be constructed so as to restrain the spillage of material. Wherever the hazard of falling materials exists, overhead protection shall be provided over walkways and roadways.

WAC 296-155-765 (Cont.)

(12) Electrical equipment shall be installed and maintained to comply with the National Electrical Code.

(13) Exhaust fumes from internal combustion engines shall be discharged away from or above the working station.

(14) Hot mix plants, steam boilers and pressure vessels shall conform to A.S.M.E. Boiler and Pressure Vessel Codes and applicable rules and regulations of the department.

(15) All hot pipes exposed to contact shall be covered or otherwise guarded against contact.

(16) All oil tanks above ground shall be properly bedded and grounded.

(17) Oil leakage on the ground shall be cleaned up or covered with absorbent material.

(18) Mixer operators shall use approved respirator and goggles except when operating from a remote location.

(19) Dust and fume collection systems shall be provided on all installations. Dust and fumes shall be discharged back into plant or carried to a suitable distance from the work area and precipitated.

[Statutory Authority: RCW 49.17.040 and 49.17.050. 86-03-074 (Order 86-14), § 296-155-765, filed 1/21/86; Order 74-26, § 296-155-765, filed 5/7/74, effective 6/6/74.]

WAC 296-155-770 Moving of structures.

(1) When structures are being raised, lowered, temporarily held in position or moved laterally, care shall be exercised to prevent the possibility of mishap.

(2) Weights to be moved shall be carefully computed and equipment furnished to provide a safety factor of five.

(3) Where excavations exist they shall be shored in compliance with Part N of this chapter.

(4) Cribbing and blocking shall be set on a level and firm foundation.

(5) Dollies and rollers shall be securely blocked except when structure is being moved by power equipment.

(6) Jacks shall comply with WAC 296-155-375 of this chapter.

(7) Provisions shall be made to maintain a minimum clearance of 10 feet from all electrical conductors with the following exceptions:

(a) When a representative of the owner of the electrical conductors is present and directs the handling of all said conductors.

(b) Where there shall be existing and/or erected mechanical barriers to prevent contact of structure or workers with said electrical conductors. Barriers shall be installed by or under the direction of the owners of the conductors.

(c) Where said electrical conductors have been de-energized and grounded by the owners of the conductors.

WAC 296-155-770 (Cont.)

(d) By relocation of said electrical conductors by the owners of the conductors. The 10 foot requirement shall not be reduced by movement due to strains being imposed upon the conductors or the structures supporting the conductors or upon any fixtures or attachments thereon.

(8) When a structure is being lifted, shoring shall be provided at all times and be kept up to the object until the desired height is reached, and then it shall be blocked or cribbed immediately.

(9) Timbers must be in sound condition and of a size sufficient to maintain not more than one inch deflection for each 200 inches of unsupported span.

(10) The cross member used on the front dolly, or the fifth wheel on the truck, must be of construction and size to preclude any deflection. All floor joists of the building being moved must be firmly supported on either the running members or on the cross members, which in turn ride on or are firmly attached to the running members.

(11) When timbers are used as the cross member, a steel saddle or cradle shall be used which will distribute the load evenly over the cross members, which in turn ride on or are firmly attached to the running members.

(12) When timbers are used as the cross member, a steel saddle or cradle shall be used which will distribute the load evenly over the cross sectional area of said timber where the timber is supported over the dolly or fifth wheel. This saddle or cradle shall be equipped so as to be interchangeable on any standard fifth wheel when such operation is used. Cross members of any other material used on fifth wheel loading shall also be so equipped.

(13) When running members are secured to the lower side of the cross member supported by the fifth wheel or front dolly, the primary support shall be 3/4 inch steel bolts placed one on either side of each member and spaced from such members by 1/2 inch steel plate shaped to act as a template for placement on the top of the cross member and beneath the running member. "3/4 by 3" nuts shall be used to tighten the above described clamp in a secure fashion. A secondary binding of chain or cable with chain binder or jacks shall be used to securely fasten the running members to cross members.

Note: Chains or cables securely tightened can be used. A secondary chain or safety chain should also be used in the event that the main chain should snap.

(14) Safety chains shall be used between the running members and the towing truck to supplant the tow bar, and will be secured so as to preclude any possibility of the running timbers being pulled off the cross members on the truck or from the dollies.

(15) For the purpose of computing weights to determine the axle and tire loadings, the cubic volume of the building (length, width and height), including walls, floors and ceiling joists, shall be used, allowing five pounds per cubic foot. This method of computing weight shall be used to determine if larger equipment need be employed on any given move.

(16) When fastening structures to tractor, and runners are clamped to headers, steel chains or the equivalent shall be used. If steel chains are used, said chains shall be tightened by railroad jacks or the equivalent.

(17) All motor vehicles shall conform with motor vehicle laws of the state of Washington.

(18) A fifth wheel type suspension with two nonsteering dollies shall be acceptable for moving buildings which do not exceed 46 feet in length. Permission to move larger structures with this type of suspension shall be obtained from the department.

WAC 296-155-770 (Cont.)

(19) Pushing from the rear shall be prohibited unless a system of signals is used to control the driver.

(20) Blocks capable of holding the unit being moved shall be carried, and in case of winching operations, shall be kept close to the downhill side of the wheel of each dolly to prevent a runaway should the cable slip.

[Order 74-26, § 296-155-770, filed 5/7/74, effective 6/6/74.]

PART S
DEMOLITION

WAC 296-155-775 Preparatory operations.

(1) Prior to permitting employees to start demolition operations, an engineering survey shall be made, by a competent person, of the structure to determine structural integrity and the possibility of unplanned collapse of any portion of the structure. Any adjacent structure where employees may be exposed shall also be similarly checked. The employer shall have in writing, evidence that such a survey has been performed.

(2) A copy of the survey report and of the plans and/or methods of operations shall be maintained at the job site for the duration of the demolition operation.

(3) Any device or equipment such as scaffolds, ladders, derricks, hoists, etc., used in connection with demolition work shall be constructed, installed, inspected, maintained and operated in accordance with the regulations governing the construction, installation, inspection, maintenance and operation of such device or equipment as specified in other parts of this chapter.

(4) Federal and state codes, safety standards, rules, regulations, and ordinances governing any and all phases of demolition work shall be observed at all times.

(5) Demolition of all buildings and structures shall be conducted under competent supervision, and safe working conditions shall be afforded the employees.

(6) When employees are required to work within a structure to be demolished which has been damaged by fire, flood, explosion, or other cause, the walls or floor shall be shored or braced.

(7) All electric, gas, water, steam, sewer, and other service lines shall be shut off, capped, or otherwise controlled, outside the building line before demolition work is started. In each case, any utility company which is involved shall be notified in advance.

(8) If it is necessary to maintain any power, water or other utilities during demolition, such lines shall be temporarily relocated, as necessary, and protected.

(9) It shall be determined whether asbestos, hazardous materials, hazardous chemicals, gases, explosives, flammable materials, or similarly dangerous substances are present at the work site. When the presence of any such substance is apparent or suspected, testing and removal or purging shall be performed and the hazard eliminated before demolition is started. Removal of such substances shall be in accordance with the requirements of chapters 296-62 and 296-65 WAC.

(10) Where a hazard exists from fragmentation of glass, such hazards shall be removed.

(11) Where a hazard exists to employees falling through wall openings, the opening shall be protected to a height of between thirty-six and forty-two inches.

(12) When debris is dropped without the use of chutes, the area onto which the material is dropped shall be completely enclosed with barricades not less than forty-two inches high and not less than twenty feet back from the projected edge of the opening above. Signs, warning of the hazard of falling materials, shall be posted at each level. Removal shall not be permitted in this lower area until debris handling ceases above.

(13) All floor openings, not used as material drops, shall be covered over with material substantial enough to support the weight of any load which may be imposed. Such material shall be properly secured to prevent its accidental movement.

WAC 296-155-775 (Cont.)

(14) Except for the cutting of holes in floors for chutes, holes through which to drop materials, preparation of storage space, and similar necessary preparatory work, the demolition of exterior walls and floor construction shall begin at the top of the structure and proceed downward. Each story of exterior wall and floor construction shall be removed and dropped into the storage space before commencing the removal of exterior walls and floors in the story next below.

(15) Workers shall not be permitted to carry on a demolition operation which will expose persons working on a lower level to danger.

(16) Employee entrances to multistory structures being demolished shall be completely protected by sidewalk sheds or canopies, or both, providing protection from the face of the building for a minimum of eight feet. All such canopies shall be at least two feet wider than the building entrances or openings (one foot wider on each side thereof), and shall be capable of sustaining a load of one hundred fifty pounds per square foot.

(17) Protruding nails in boards, planks and timber shall be withdrawn, driven in or bent over as soon as the same is removed from the structure being demolished.

(18) Any material to be removed which will cause dust to be formed, shall be sprinkled with water to lay the dust incidental to its removal.

[Statutory Authority: Chapter 49.17 RCW. 94-15-096 (Order 94-07), § 296-155-775, filed 7/20/94, effective 9/20/94; 87-24-051 (Order 87-24), § 296-155-775, filed 11/30/87. Statutory Authority: RCW 49.17.050(2) and 49.17.040. 87-10-008 (Order 87-06), § 296-155-775, filed 4/27/87. Statutory Authority: RCW 49.17.040 and 49.17.050. 86-03-074 (Order 86-14), § 296-155-775, filed 1/21/86; Order 74-26, § 296-155-775, filed 5/7/74, effective 6/6/74.]

WAC 296-155-780 Stairs, passageways, and ladders.

(1) Only those stairways, passageways, and ladders, designated as means of access to the structure of building, shall be used. Other access ways shall be entirely closed off at all times.

(2) All stairs, passageways, ladders and incidental equipment thereto, which are covered by this section, shall be periodically inspected and maintained in a clean safe condition.

(3) All ladders shall be secured in position.

(4) In a multistory building, when a stairwell is being used, it shall be properly illuminated by either natural or artificial means, and completely and substantially covered over at a point not less than two floors below the floor on which work is being performed. Access to the floor where the work is in progress shall be through a properly lighted, protected, and separate passageway.

[Order 74-26, § 296-155-780, filed 5/7/74, effective 6/6/74.]

WAC 296-155-785 Chutes.

(1) No material shall be dropped to any point lying outside the exterior walls of the structure unless the area is effectively protected.

(2) All materials chutes, or sections thereof, at an angle of more than 45° from the horizontal, shall be entirely enclosed, except for openings equipped with closures at or about floor level for the insertion of materials. The openings shall not exceed 48 inches in height measured along the wall of the chute. At all stories below the top floor, such openings shall be kept closed when not in use.

(3) A substantial gate shall be installed in each chute at or near the discharge end. A competent employee shall be assigned to control the operation of the gate, and the backing and loading of trucks.

WAC 296-155-785 (Cont.)

(4) When operations are not in progress, the area surrounding the discharge end of a chute shall be securely closed off.

(5) Any chute opening, into which workers dump debris, shall be protected by a substantial guardrail between 36 and 42 inches above the floor or other surface on which the employees stand to dump the material. Any space between the chute and the edge of openings in the floors through which it passes shall be solidly covered over.

(6) Where the material is dumped from mechanical equipment or wheelbarrows, a securely attached toeboard or bumper, not less than 4 inches thick and 6 inches high, shall be provided at each chute opening.

(7) Chutes shall be designed and constructed of such strength as to eliminate failure due to impact of materials or debris loaded therein.

[Statutory Authority: Chapter 49.17 RCW. 94-15-096 (Order 94-07), § 296-155-785, filed 7/20/94, effective 9/20/94; Order 74-26, § 296-155-785, filed 5/7/74, effective 6/6/74.]

WAC 296-155-790 Removal of materials through floor openings. Any openings cut in a floor for the disposal of materials shall be no larger in size than 25 percent of the aggregate of the total floor area, unless the lateral supports of the removed flooring remain in place. Floors weakened or otherwise made unsafe by demolition operations shall be shored to carry safely the intended imposed load from demolition operations.

[Order 74-26, § 296-155-790, filed 5/7/74, effective 6/6/74.]

WAC 296-155-795 Removal of walls, masonry sections, and chimneys.

(1) Masonry walls, or other sections of masonry, shall not be permitted to fall upon the floors of the building in such masses as to exceed the safe carrying capacities of the floors.

(2) No wall section, which is more than one story in height, shall be permitted to stand alone without lateral bracing, unless such wall was originally designed and constructed to stand without such lateral support, and is in a condition safe enough to be self-supporting. All walls shall be left in a stable condition at the end of each shift.

(3) Employees shall not be permitted to work on the top of a wall when weather conditions constitute a hazard.

(4) Structural or load-supporting members on any floor shall not be cut or removed until all stories above such a floor have been demolished and removed. This provision shall not prohibit the cutting of floor beams for the disposal of materials or for the installation of equipment, provided that the requirements of WAC 296-155-790 and 296-155-800 are met.

(5) Floor openings within 10 feet of any wall being demolished shall be planked solid, except when employees are kept out of the area below.

(6) In buildings of “skeleton-steel” construction, the steel framing may be left in place during the demolition of masonry. Where this is done, all steel beams, girders, and similar structural supports shall be cleared of all loose material as the masonry demolition progresses downward.

(7) Walkways or ladders shall be provided to enable employees to safely reach or leave any scaffold or wall.

(8) Walls, which serve as retaining walls to support earth or adjoining structures, shall not be demolished until such earth has been properly braced or adjoining structures have been properly underpinned.

(9) Walls, which are to serve as retaining walls against which debris will be piled, shall not be so used unless capable of safely supporting the imposed load.

[Order 74-26, § 296-155-795, filed 5/7/74, effective 6/6/74.]

WAC 296-155-800 Manual removal of floors.

(1) Openings cut in a floor shall extend the full span of the arch between supports.

(2) Before demolishing any floor arch, debris and other material shall be removed from such arch and other adjacent floor area. Planks not less than 2 inches by 10 inches in cross section, full size undressed, shall be provided for, and shall be used by employees to stand on while breaking down floor arches between beams. Such planks shall be so located as to provide a safe support for the workers should the arch between the beams collapse. The open space between planks shall not exceed 16 inches.

(3) Safe walkways, not less than 18 inches wide, formed of planks not less than 2 inches thick if wood, or of equivalent strength if metal, shall be provided and used by workers when necessary to enable them to reach any point without walking upon exposed beams.

(4) Stringers of ample strength shall be installed to support the flooring planks, and the ends of such stringers shall be supported by floor beams or girders, and not by floor arches alone.

(5) Planks shall be laid together over solid bearings with the ends overlapping at least 1 foot.

(6) When floor arches are being removed, employees shall not be allowed in the area directly underneath, and such an area shall be barricaded to prevent access to it.

(7) Demolition of floor arches shall not be started until they, and the surrounding floor area for a distance of 20 feet, have been cleared of debris and any other unnecessary materials.

[Statutory Authority: Chapter 49.17 RCW. 94-15-096 (Order 94-07), § 296-155-800, filed 7/20/94, effective 9/20/94; Order 74-26, § 296-155-800, filed 5/7/74, effective 6/6/74.]

WAC 296-155-805 Removal of walls, floors, and material with equipment.

(1) Mechanical equipment shall not be used on floors or working surfaces unless such floors or surfaces are of sufficient strength to support the imposed load.

(2) Floor openings shall have curbs or stop-logs to prevent equipment from running over the edge.

(3) Mechanical equipment used shall meet the requirements specified in parts L and M of this chapter.

[Order 74-26, § 296-155-805, filed 5/7/74, effective 6/6/74.]

WAC 296-155-810 Catch platforms.

(1) During the demolition of the exterior walls of a structure originally more than seventy feet high, catch platforms shall be erected along the exterior faces of such walls where necessary to prevent injury to persons working below.

(2) Such catch platforms shall be constructed and maintained not more than three stories below the story from which the exterior walls are being removed, until the demolition has progressed to within three stories of the ground level.

(3) Catch platforms shall not be less than five feet in width measured in a horizontal distance from the face of the structure and constructed of outriggers and planks. Planks shall be laid tight together and without openings between the planks and the wall.

Note: Catch platforms may be constructed of other approved materials of equal strength and security against falling material.

WAC 296-155-810 (Cont.)

(4) Catch platforms shall be capable of sustaining a uniform live load of not less than one hundred and twenty-five pounds per square foot.

[Order 74-26, § 296-155-810, filed 5/7/74, effective 6/6/74.]

WAC 296-155-815 Storage.

(1) The storage of waste material and debris on any floor shall not exceed the allowable floor loads.

(2) In buildings having wooden floor construction, the flooring boards may be removed from not more than one floor above grade to provide storage space for debris, provided falling material is not permitted to endanger the stability of the structure.

(3) When wood floor beams serve to brace interior walls or free-standing exterior walls, such beams shall be left in place until other equivalent support can be installed to replace them.

(4) Floor arches, to an elevation of not more than 25 feet above grade, may be removed to provide storage area for debris: Provided, That such removal does not endanger the stability of the structure.

(5) Storage space into which material is dumped shall be blocked off, except for openings necessary for the removal of material. Such openings shall be kept closed at all times when material is not being removed.

[Order 74-26, § 296-155-815, filed 5/7/74, effective 6/6/74.]

WAC 296-155-820 Removal of steel construction.

(1) When floor arches have been removed, planking in accordance with WAC 296-155-800(2) shall be provided for the workers engaged in razing the steel framing.

(2) Cranes, derricks, and other hoisting equipment used shall meet the requirements specified in part L of this chapter.

(3) Steel construction shall be dismantled column length by column length, and tier by tier (columns may be in two-story lengths).

(4) Any structural member being dismembered shall not be overstressed.

[Order 74-26, § 296-155-820, filed 5/7/74, effective 6/6/74.]

WAC 296-155-825 Mechanical demolition.

(1) No workers shall be permitted in any area, which can be adversely affected by demolition operations, when balling or clamming is being performed. Only those workers necessary for the performance of the operations shall be permitted in this area at any other time.

(2) The weight of the demolition ball shall not exceed 50 percent of the crane's rated load, based on the length of the boom and the maximum angle of operation at which the demolition ball will be used, or it shall not exceed 25 percent of the nominal breaking strength of the line by which it is suspended, whichever results in a lesser value.

(3) The crane boom and loadline shall be as short as possible.

(4) The ball shall be attached to the loadline with a swivel-type connection to prevent twisting of the loadline, and shall be attached by positive means in such manner that the weight cannot become accidentally disconnected.

WAC 296-155-825 (Cont.)

(5) When pulling over walls or portions thereof, all steel members affected shall have been previously cut free.

(6) All roof cornices or other such ornamental stonework shall be removed prior to pulling walls over.

(7) During demolition, continuing inspections by a competent person shall be made as the work progresses to detect hazards resulting from weakened or deteriorated floors, or walls, or loosened material. No employee shall be permitted to work where such hazards exist until they are corrected by shoring, bracing, or other effective means.

[Order 74-26, § 296-155-825, filed 5/7/74, effective 6/6/74.]

WAC 296-155-830 Selective demolition by explosives. Selective demolition by explosives shall comply with chapter 296-52 WAC.

[Statutory Authority: RCW 49.17.040 and 49.17.050. 86-03-074 (Order 86-14), § 296-155-830, filed 1/21/86; Order 74-26, § 296-155-830, filed 5/7/74, effective 6/6/74.]

PART T
Safety Standards for the Possession, Handling and Use of Explosives

Refer to Chapter 296-52 WAC

PART U
POWER DISTRIBUTION AND TRANSMISSION LINES

(RESERVED)

Refer to chapter 296-45 WAC, "Safety standards for electrical workers."

PART V
ROLLOVER PROTECTIVE STRUCTURES AND OVERHEAD PROTECTION

WAC 296-155-950 Rollover protective structures (ROPS) for material handling equipment.

(1) Coverage.

(a) This section applies to the following types of material handling equipment: To all rubber-tired, self-propelled scrapers, rubber-tired front-end loaders, rubber-tired dozers, wheel-type agricultural and industrial tractors, crawler tractors, crawler-type loaders, and motor graders, with or without attachments, that are used in construction work. This requirement does not apply to sideboom pipelaying tractors.

(b) The promulgation of specific standards for rollover protective structures for compactors and rubber-tired skidsteer equipment is reserved pending consideration of standards currently being developed.

(2) Equipment manufactured on or after September 1, 1972, Material handling machinery described in subsection (1) of this section and manufactured on or after September 1, 1972, shall be equipped with rollover protective structures which meet the minimum performance standards prescribed in WAC 296-155-955 and 296-155-960, as applicable.

(3) Equipment manufactured before September 1, 1972.

(a) All material handling equipment described in subsection (1) of this section and manufactured or placed in service (owned or operated by the employer) prior to September 1, 1972, shall be fitted with rollover protective structures.

Machines manufactured before July 1, 1969; Reserved pending further study, development, and review.

(b) Rollover protective structures and supporting attachment shall meet the minimum performance criteria detailed in WAC 296-155-955 and 296-155-960, as applicable or shall be designed, fabricated, and installed in a manner which will support, based on the ultimate strength of the metal, at least two times the weight of the prime mover applied at the point of impact.

(i) The design objective shall be to minimize the likelihood of a complete overturn and thereby minimize the possibility of the operator being crushed as a result of a rollover or upset.

(ii) The design shall provide a vertical clearance of at least 52 inches from the work deck to the ROPS at the point of ingress or egress.

(4) Remounting. ROPS removed for any reason, shall be remounted with equal quality, or better, bolts or welding as required for the original mounting.

(5) Labeling. Each ROPS shall have the following information permanently affixed to the structure:

(a) Manufacturer or fabricator's name and address;

(b) ROPS model number, if any;

(c) Machine make, model, or series number that the structure is designed to fit.

WAC 296-155-950 (Cont.)

(6) Machines meeting certain existing governmental requirements. Any machine in use, equipped with rollover protective structures, shall be deemed in compliance with this section if it meets the rollover protective structures requirements of the U.S. Army Corps of Engineers, or the Bureau of Reclamation of the U.S. Department of the Interior in effect on April 5, 1972. The requirements in effect are:

(a) U.S. Army Corps of Engineers: General Safety Requirements, EM-385-1-1 (March 67).

(b) Bureau of Reclamation, U.S. Department of the Interior: Safety and Health Regulations for Construction, Part II (September 1971).

(7) ROPS meeting the criteria set forth in SAE J1040 a and SAE J1040 b shall be regarded as substantially meeting the requirements of this section, even if they do not meet all the criteria set forth in earlier criteria documents on which the present standard is based.

[Statutory Authority: Chapter 49.17 RCW. 91-03-044 (Order 90-18), § 296-155-950, filed 1/10/91, effective 2/12/91. Statutory Authority: RCW 49.17.040 and 49.17.050. 86-03-074 (Order 86-14), § 296-155-950, filed 1/21/86; Order 76-29, § 296-155-950, filed 9/30/76; Order 74-26, § 296-155-950, filed 5/7/74, effective 6/6/74.]

WAC 296-155-955 Minimum performance criteria for rollover protective structures for designated scrapers, loaders, dozers, graders, and crawler tractors.

(1) Definitions. For purposes of this section, **"vehicle weight"** means the manufacturer's maximum weight of the prime mover for rubber-tired self-propelled scrapers. For other types of equipment to which this section applies, **"vehicle weight"** means the manufacturer's maximum recommended weight of the vehicle plus the heaviest attachment.

(2) General.

(a) This section prescribes minimum performance criteria for rollover protective structures (ROPS) for rubber-tired self-propelled scrapers; rubber-tired front-end loaders and rubber-tired dozers; crawler tractors, and crawler-type loaders, and motor graders. The vehicle and ROPS as a system shall have the structural characteristics prescribed in subsection (7) of this section for each type of machine described in this subsection.

(b) Equipment listed in subsection (2)(a) of this section may be exempted from the requirements for fitment of ROPS where it can be shown, to the satisfaction of the department, that the equipment will only be used where no rollover hazard will exist.

(3) The static laboratory test prescribed herein will determine the adequacy of the structures used to protect the operator under the following conditions:

(a) For rubber-tired self-propelled scrapers, rubber-tired front-end loaders, and rubber-tired dozers: Operating between 0 and 10 miles per hour over hard clay where rollover would be limited to a maximum roll angle of 360° down a slope of 30° maximum.

(b) For motor graders: Operating between 0 and 10 miles per hour over hard clay where rollover would be limited to 360° down a slope of 30° maximum.

(c) For crawler tractors and crawler-type loaders: Operating between 0 and 10 miles per hour over hard clay where rollover would be limited to a maximum roll angle of 360° down a slope of 45°.

WAC 296-155-955 (Cont.)

(4) Facilities and apparatus.

(a) The following material is necessary:

(i) Material, equipment, and tiedown means adequate to ensure that the ROPS and its vehicle frame absorb the applied energy.

(ii) Equipment necessary to measure and apply loads to the ROPS. Adequate means to measure deflection and lengths should also be provided.

(iii) Recommended, but not mandatory, types of test setups are illustrated in Figure V-1 for all types of equipment to which this section applies; and in Figure V-2 for rubber-tired self-propelled scrapers; Figure V-3 for rubber-tired front-end loaders, rubber-tired dozers, and motor graders; and Figure V-4 for crawler tractors and crawler-type loaders.

(b) Table V-1 contains a listing of the required apparatus for all types of equipment described in subsection (2)(a) of this section.

TABLE V-1

Means to measure	Accuracy
Deflection of ROPS, inches	± 5% of deflection measured.
Vehicle weight, pounds	± 5% of the weight measured.
Force applied to frame, pounds	± 5% of force measured.
Dimensions of critical zone, inches.	± 0.5 in.

(5) Vehicle condition. The ROPS to be tested must be attached to the vehicle structure in the same manner as it will be attached during vehicle use. A totally assembled vehicle is not required. However, the vehicle structure and frame which support the ROPS must represent the actual vehicle installation. All normally detachable windows, panels, or nonstructural fittings shall be removed so that they do not contribute to the strength of the ROPS.

(6) Test procedure. The test procedure shall include the following, in the sequence indicated:

(a) Energy absorbing capabilities of ROPS shall be verified when loaded laterally by incrementally applying a distributed load to the longitudinal outside top member of the ROPS, as shown in Figure V-1, V-2 or V-3 as applicable. The distributed load must be applied so as to result in approximately uniform deflection of the ROPS. The load increments should correspond with approximately 0.5 in. ROPS deflection increment in the direction of the load application, measured at the ROPS top edge. Should the operator's seat be off center, the load shall be applied on the off center side. For each applied load increment, the total load (lb.) versus corresponding deflection (in.) shall be plotted, and the area under the load-deflection curve shall be calculated. This area is equal to the energy (in.-lb.) absorbed by the ROPS. For a typical load-deflection curve and calculation method, see Figure V-5.

Incremental loading shall be continued until the ROPS has absorbed the amount of energy and the minimum applied load specified under subsection (7) of this section has been reached or surpassed.

WAC 296-155-955 (Cont.)

(b) To cover the possibility of the vehicle coming to rest on its top, the support capability shall be verified by applying a distributed vertical load to the top of the ROPS so as to result in approximately uniform deflection (see Figure V-1).The load magnitude is specified in subsection (7)(b)(iii) of this section.

(c) The low temperature impact strength of the material used in the ROPS shall be verified by suitable material tests or material certification (see subsection (7)(b)(iv) of this section).

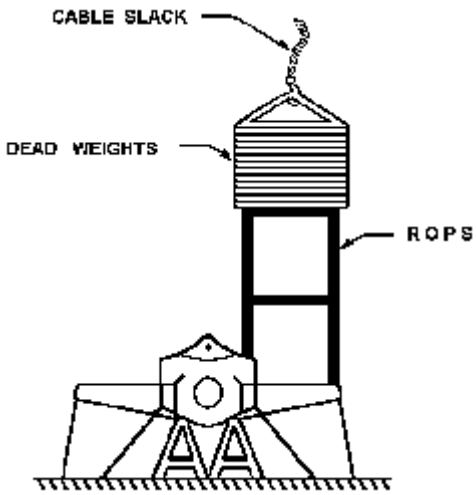

FIGURE V-1
Vertical loading setup for all types of equipment described in WAC 296-155-955(1).

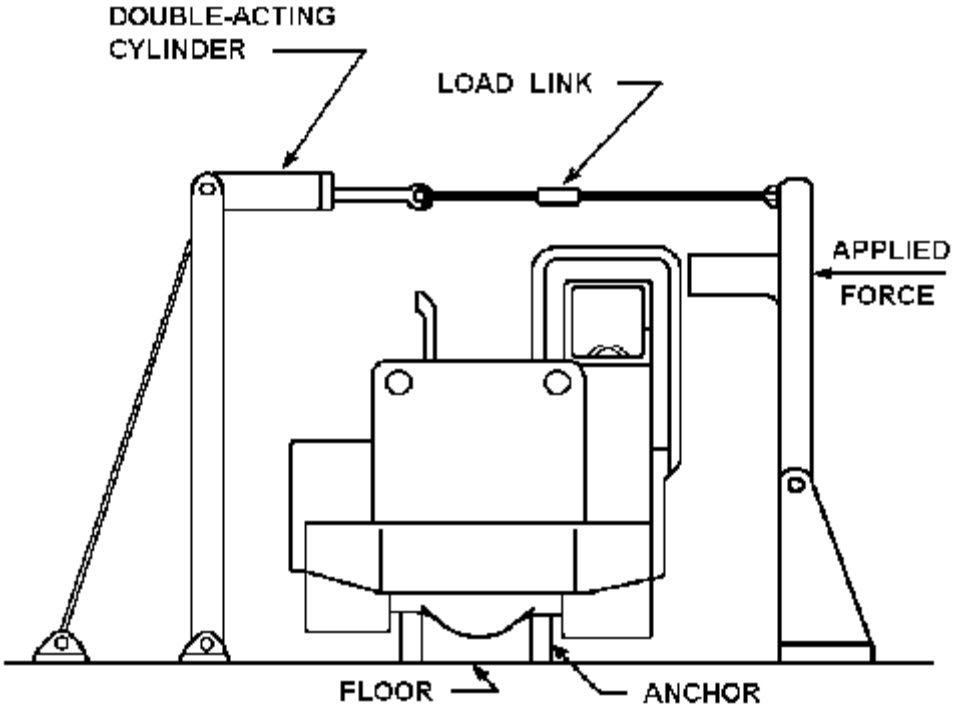

FIGURE V-2
Test setup for rubber-tired self-propelled scrapers.

WAC 296-155-955 (Cont.)

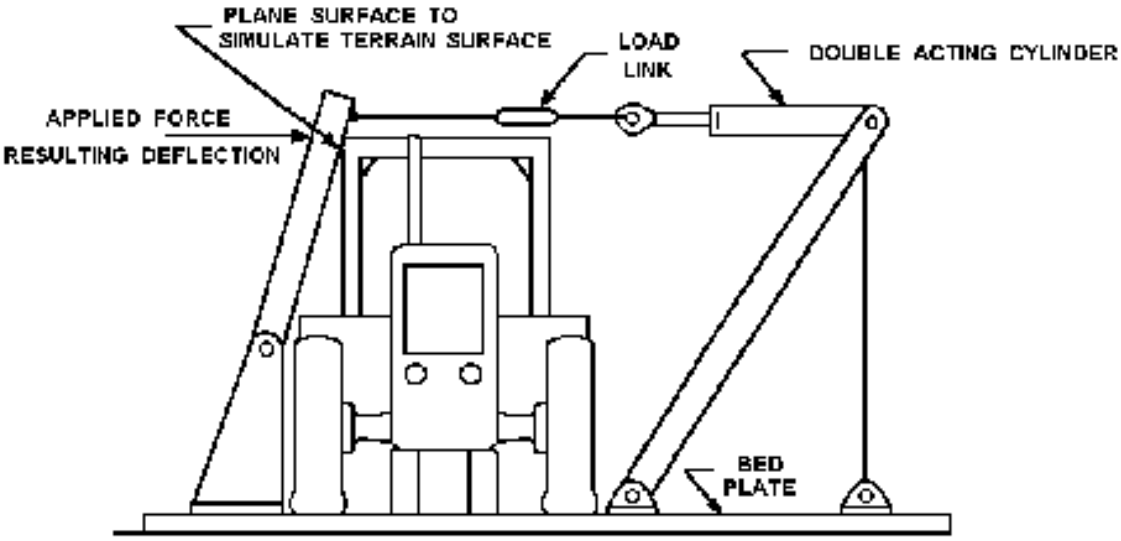

FIGURE V-3
Test setup for rubber-tired front-end loaders, rubber-tired dozers, and motor graders.

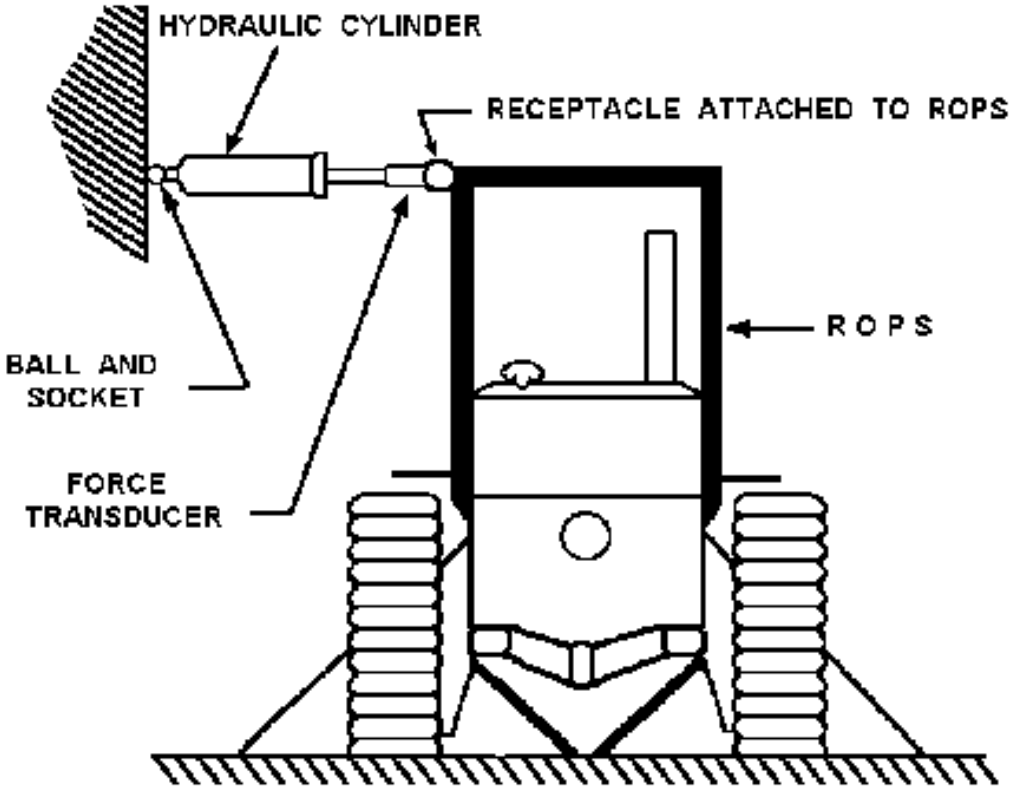

FIGURE V-4
Side-loading setup for crawler tractors and crawler loaders.

WAC 296-155-955 (Cont.)

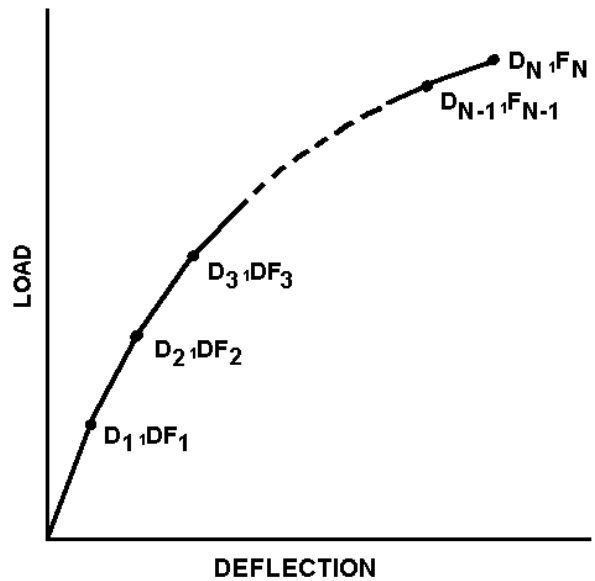

A = TOTAL DEFLECTION
F = FORCE APPLIED

$$\text{AREA} = \frac{D_1 F_1}{2} + (D_2 - D_1)\frac{F_1 F_2}{2} + (D_3 - D_2)\frac{F_2 F_3}{2} + \ldots + (D_N - D_{N-1})\frac{F_{N-1} + F_N}{2}$$

FIGURE V-5
Determination of energy area under force deflection curve for all types of ROPS equipment defined in WAC 296-155-955.

(7) Performance requirements.

(a) General performance requirements.

(i) No repairs or straightening of any member shall be carried out between each prescribed test.

(ii) During each test, no part of the ROPS shall enter the critical zone as detailed in SAE J397 (1969). Deformation of the ROPS shall not allow the plane of the ground to enter this zone.

(b) Specific performance requirements.

(i) The energy requirement for purposes of meeting the requirements of subsection (6)(a) of this section is to be determined by referring to the plot of the energy versus weight of vehicle (see Figure V-6 for rubber-tired self-propelled scrapers; Figure V-7 for rubber-tired front-end loaders and rubber-tired dozers; Figure V-8 for crawler tractors and crawler-type loaders; and Figure V-9 for motor graders. For purposes of this section, force and weight are measured as pounds; energy (U) is measured as inch-pounds).

WAC 296-155-955 (Cont.)

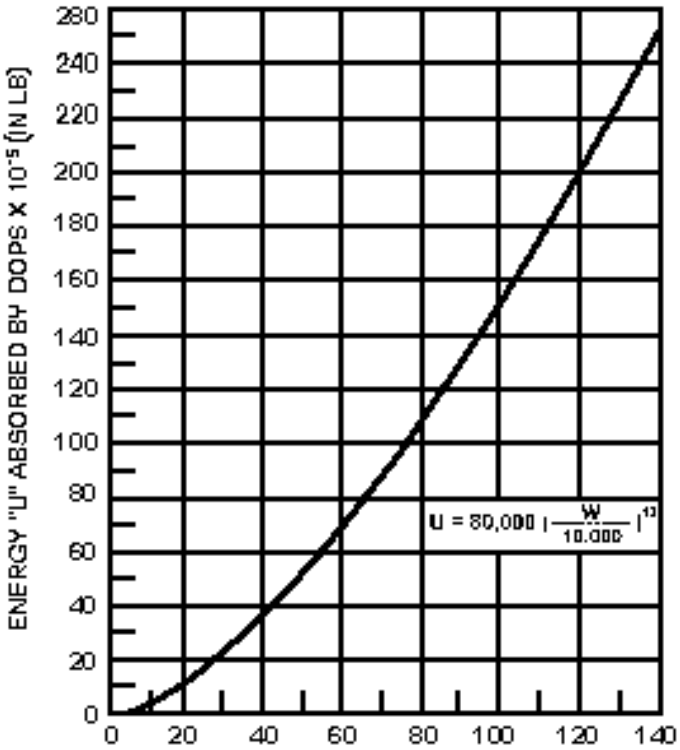

FIGURE V-6
Energy absorbed versus vehicle weight.

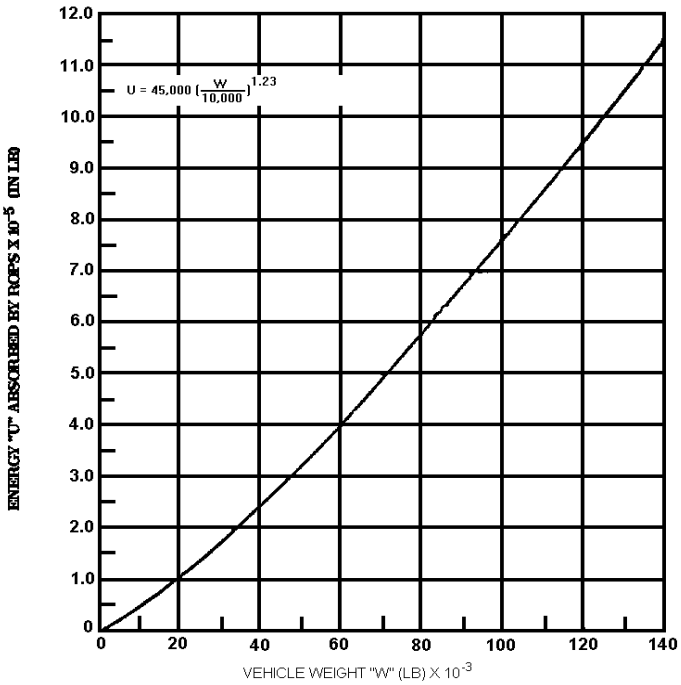

FIGURE V-7
Energy absorbed versus vehicle weight.

WAC 296-155-955 (Cont.)

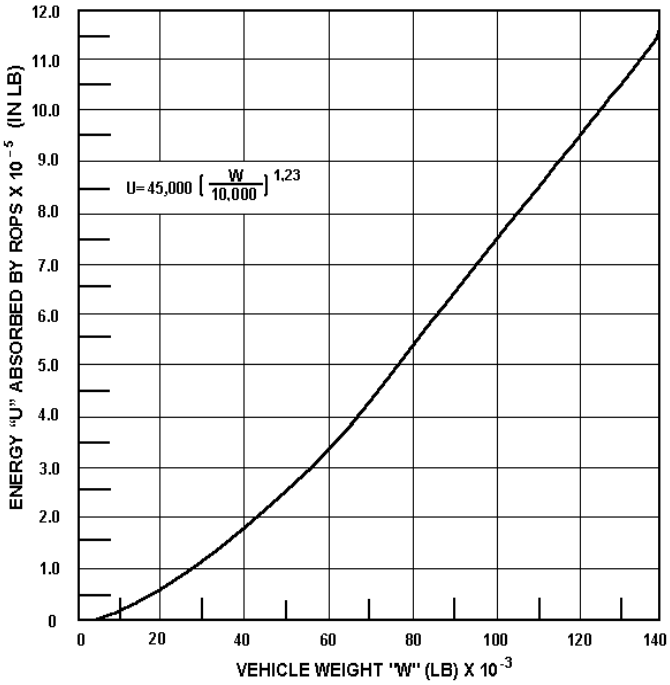

FIGURE V-8
Energy absorbed versus vehicle weight.

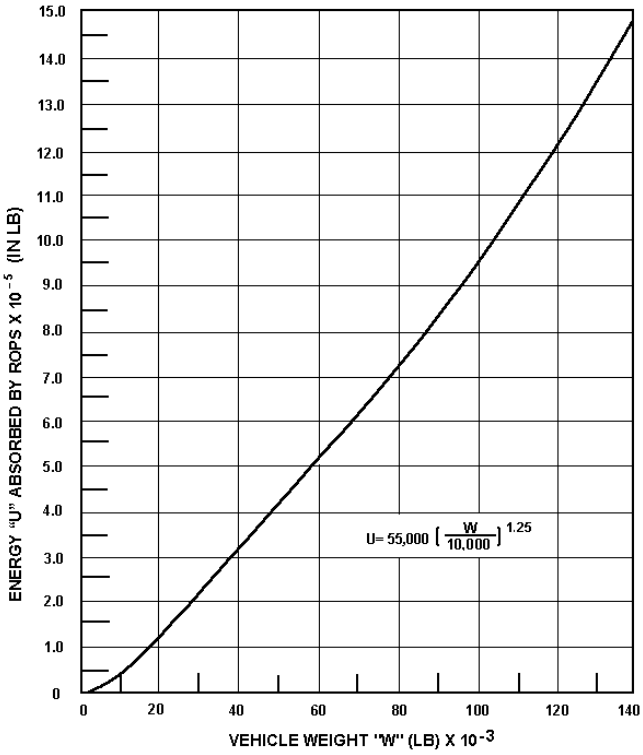

FIGURE V-9
Energy absorbed versus vehicle weight.

WAC 296-155-955 (Cont.)

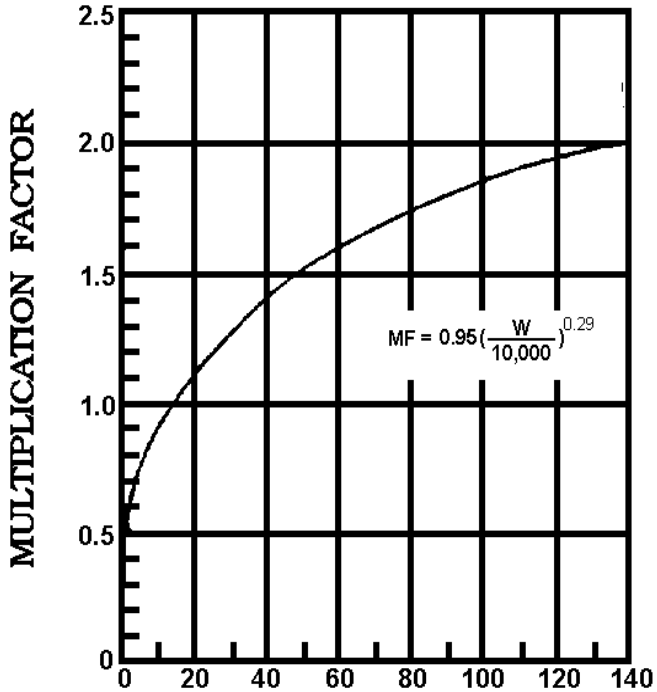

FIGURE V-10
Minimum horizontal load factor for self-propelled scrapers.

(ii) The applied load must attain at least a value which is determined by multiplying the vehicle weight by the corresponding factor shown in Figure V-10 for rubber-tired self-propelled scrapers; in Figure V-11 for rubber-tired front-end loaders and rubber-tired dozers; in Figure V-12 for crawler tractors and crawler-type loaders; and in Figure V-13 for motor graders.

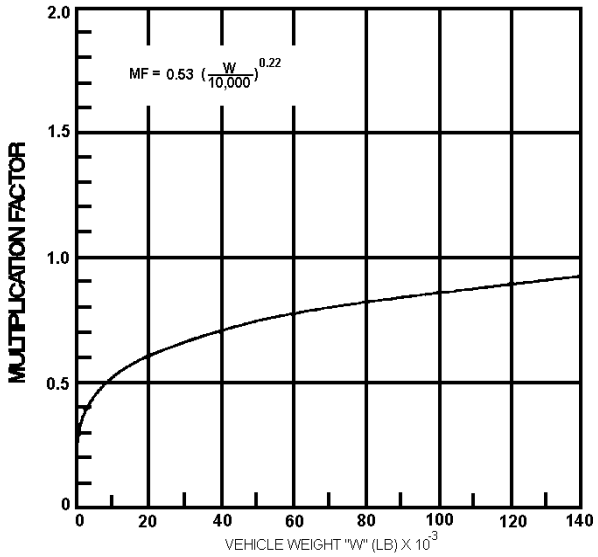

FIGURE V-11
Minimum horizontal load factor for rubber-tired loaders and dozers.

WAC 296-155-955 (Cont.)

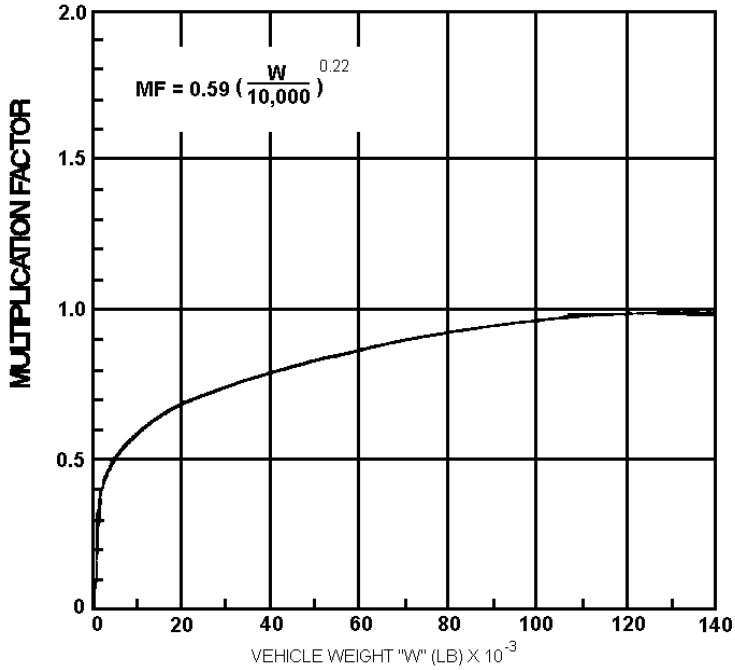

FIGURE V-12
Minimum horizontal load factor for crawler tractors and crawler-type loaders.

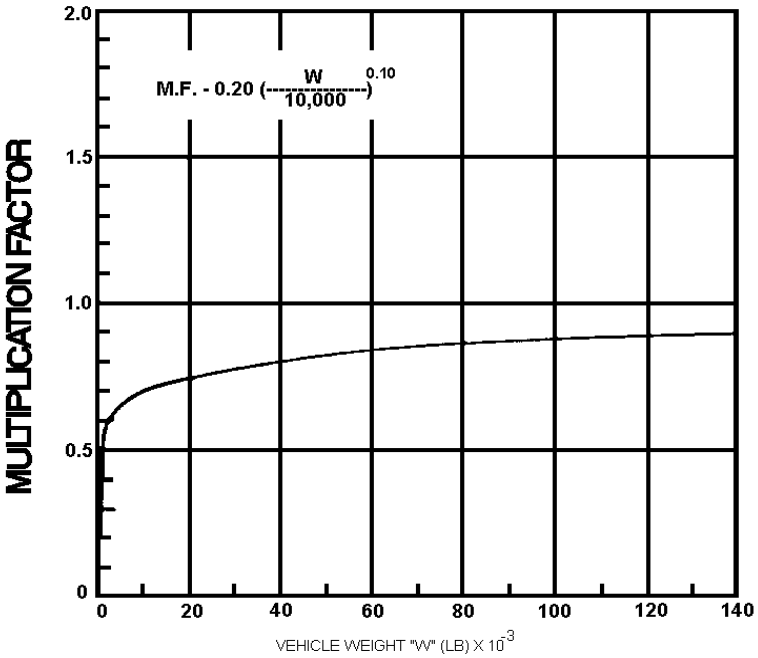

FIGURE V-13
Minimum horizontal load factor for motor graders.

WAC 296-155-955 (Cont.)

(iii) The load magnitude for purposes of compliance with subsection (6)(b) of this section is equal to the vehicle weight. The test of load magnitude shall only be made after the requirements of subdivision (b)(i) of this subsection are met.

(iv) Material used in the ROPS must have the capability of performing at zero degrees Fahrenheit, or exhibit Charpy V notch impact strength of 8 foot-pounds at minus 20° Fahrenheit. This is a standard Charpy specimen as described in American Society of Testing and Materials A 370, Methods and Definitions for Mechanical Testing of Steel Products. The purpose of this requirement is to reduce the tendency of brittle fracture associated with dynamic loading, low temperature operation, and stress raisers which cannot be entirely avoided on welded structures.

(8) Source of standard. This standard is derived from, and restates, the following Society of Automotive Engineers Recommended Practices: SAE J320a, Minimum Performance Criteria for Roll-Over Protective Structure for Rubber-Tired, Self-Propelled Scrapers; SAE J394, Minimum Performance Criteria for Roll-Over Protective Structure for Rubber-Tired Front- End Loaders and Rubber-Tired Dozers; SAE J395, Minimum Performance Criteria for Roll-Over Protective Structure for Crawler Tractors and Crawler-Type Loaders; and SAE J396, Minimum Performance Criteria for Roll-Over Protective Structure for Motor Graders. These recommended practices shall be resorted to in the event that questions of interpretation arise. The recommended practices appear in the 1971 SAE Handbook, which may be examined in each of the district offices of the department of labor and industries.

[Statutory Authority: Chapter 49.17 RCW. 94-15-096 (Order 94-07), § 296-155-955, filed 7/20/94, effective 9/20/94; Order 74-26, § 296-155-955, filed 5/7/74, effective 6/6/74.]

WAC 296-155-960 Protective frame (ROPS) test procedures and performance requirements for wheel-type agricultural and industrial tractors used in construction.

(1) Definitions applicable to this section.

(a) SAE J333a, Operator Protection for Wheel-Type Agricultural and Industrial Tractors (July 1970) defines **"agricultural tractor"** as a "wheel-type vehicle of more than 20 engine horsepower designed to furnish the power to pull, carry, propel, or drive implements that are designed for agricultural usage." Since this chapter applies only to construction work, the following definition of "agricultural tractor" is adopted for purposes of this part: **"Agricultural tractor"** means a wheel-type vehicle of more than 20 engine horsepower, used in construction work, which is designed to furnish the power to pull, propel, or drive implements.

(b) **"Industrial tractor"** means that class of wheeled type tractor of more than 20 engine horsepower (other than rubber-tired loaders and dozers described in WAC 296-155-955), used in operations such as landscaping, construction services, loading, digging, grounds keeping, and highway maintenance.

(c) The following symbols, terms, and explanations apply to this section:

E_{is} = Energy input to be absorbed during side loading. E_{is} = 723 + 0.4 W ft.-lb. (E'_{is} = 100 + 0.12 W', m. - kg).

E_{ir} = Energy input to be absorbed during rear loading. E_{ir} = 0.47 W ft. - lb. (E'_{ir} = 0.14 W', m. - kg).

WAC 296-155-960 (Cont.)

W = Tractor weight as prescribed in WAC 296-155-960 (5)(a) and (5)(c) in lb. (W', kg).

L = Static load, lb. (kg.).

D = Deflection under L, in. (mm.).

L - D = Static load-deflection diagram.

L_m - D_m = Modified static load-deflection diagram (Figure V-20).To `account for increase in strength due to increase in strain rate, raise L in plastic range to L x K.

K = Increase in yield strength induced by higher rate of loading (1.3 for hot rolled low carbon steel 1010-1030). Low carbon is preferable; however, if higher carbon or other material is used, K must be determined in the laboratory. Refer to Charles H. Norris, et al., Structural Design for Dynamic Loads (1959), p. 3.

L_{max} = Maximum observed static load.

Load limit = Point on L-D curve where observed static load is 0.8 L_{max} (refer to Figure V-19).

E_u = Strain energy absorbed by the frame, ft.-lb. (m. - kg) area under L_m-D_m curve.

FER = Factor of energy ratio, FER = E_u/E_{is}; also = E_u/E_{ir}.

P_b = Maximum observed force in mounting connection under static load, L, lb. (kg.).

FSB = Design margin for mounting connection FSB = (P_u/P_b)-1.

H = Vertical height of lift of 4,410 lb. (2,000 kg.) weight, in. (H', mm.). The weight shall be pulled back so that the height of its center of gravity above the point of impact is defined as follows: H = 4.92 + 0.00190 W or (H' = 125 = 0.107 W') (Figure V-14).

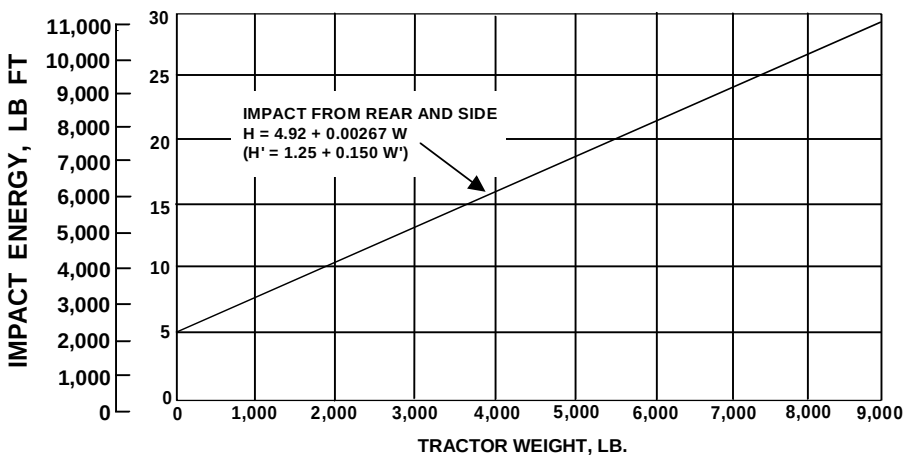

NOTATION OF FORMULAE
H = HEIGHT OF LIFT OF WEIGHT IN IN. (H' IN MM)
W = UNBALLASTED WEIGHT OF TRACTOR IN LB (W' IN KG)

FIGURE V-14

Impact energy and corresponding lift height of 4,410 lb. (2,000 kg.) weight.

WAC 296-155-960 (Cont.)

(ii) Source of standard. The standard in this section is derived from, and restates, Society of Automotive Engineers Standard J334a (July 1970), Protective Frame Test Procedures and performance requirements. This standard shall be resorted to in the event that questions of interpretation arise. The standard appears in the 1971 SAE Handbook.

(2) General.

(a) The purpose of this section is to set forth requirements for frames for the protection of operators of wheel type agricultural and industrial tractors to minimize the possibility of operator injury resulting from accidental upsets during normal operation. With respect to agricultural and industrial tractors, the provisions of WAC 296-155-955 and 296-155-965 for rubber-tired dozers and rubber-tired loaders may be utilized in lieu of the requirements of this section.

(b) The protective frame which is the subject of this standard is a structure mounted to the tractor that extends above the operator's seat and conforms generally to Figure V-15.

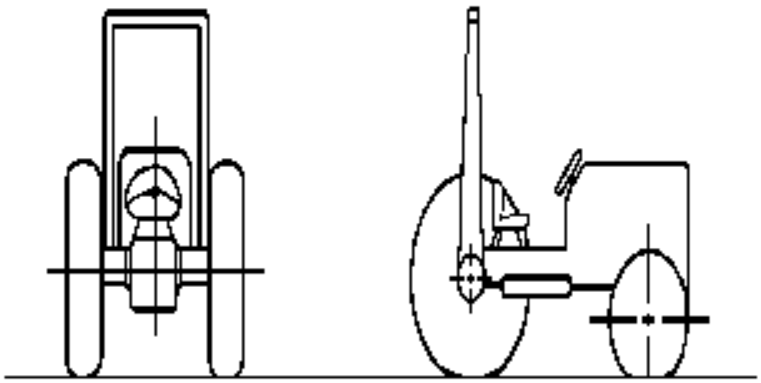

FIGURE V-15
Typical frame configuration.

(c) If an overhead weather shield is attached to the protective frame, it may be in place during tests: *Provided*, That it does not contribute to the strength of the protective frame. If such an overhead weather shield is attached, it must meet the requirements of subsection (10) of this section.

(d) For overhead protection requirements, see WAC 296-155-965.

(e) If protective enclosures are used on wheel-type agricultural and industrial tractors, they shall meet the requirements of Society of Automotive Engineers Standard J168 (July 1970), Protective Enclosures, Test Procedures, and performance requirements.

(3) Applicability. The requirements of this section apply to wheel-type agricultural tractors use in construction work and to wheel-type industrial tractors used in construction work. See subsection (1) of this section for definitions of agricultural tractors and industrial tractors.

(4) Performance requirements.

(a) Either a laboratory test or a field test is required in order to determine the performance requirements set forth in subsection (10) of this section.

WAC 296-155-960 (Cont.)

(b) A laboratory test may be either static or dynamic. The laboratory test must be under conditions of repeatable and controlled loading in order to permit analysis of the protective frame.

(c) A field upset test, if used, shall be conducted under reasonably controlled conditions, both rearward and sideways, to verify the effectiveness of the protective frame under actual dynamic conditions.

(5) Test procedure-General.

(a) The tractor used shall be the tractor with the greatest weight on which the protective frame is to be used.

(b) A new protective frame and mounting connections of the same design shall be used for each test procedure.

(c) Instantaneous and permanent frame deformation shall be measured and recorded for each segment of the test.

(d) Dimensions relative to the seat shall be determined with the seat unloaded and adjusted to its highest and most rearward latched position provided for a seated operator.

(e) If the seat is offset, the frame loading shall be on the side with the least space between the centerline of the seat and the upright.

(f) The low temperature impact strength of the material used in the protective structure shall be verified by suitable material tests or material certifications in accordance with WAC 296-155-955 (7)(b)(iv).

(6) Test procedure for vehicle overturn.

(a) Vehicle weight. The weight of the tractor, for purposes of this section, includes the protective frame, all fuels, and other components required for normal use of the tractor. Ballast must be added if necessary to achieve a minimum total weight of 130 lb. (59 kg.) per maximum power takeoff horsepower at rated engine speed. The weight of the front end must be at least 33 lb. (15 kg.) per maximum power takeoff horsepower. In case power takeoff horsepower is unavailable, 95 percent of net engine flywheel horsepower shall be used.

(b) Agricultural tractors shall be tested at the weight set forth in subdivision (a) of this subsection.

(c) Industrial tractors shall be tested with items of integral or mounted equipment and ballast that are sold as standard equipment or approved by the vehicle manufacturer for use with the vehicle where the protective frame is expected to provide protection for the operator with such equipment installed. The total vehicle weight and front end weight as tested shall not be less than the weights established in subdivision (a) of this subsection.

(d) The test shall be conducted on a dry, firm soil bank as illustrated in Figure V-16. The soil in the impact area shall have an average cone index in the 0.6 in. (153 mm.) layer not less than 150 according to American Society of Agricultural Engineers Recommendations ASAE R313, Soil Cone Penetrometer. The path of travel of the vehicle shall be 12° ± 2° to the top edge of the bank.

WAC 296-155-960 (Cont.)

(e) The upper edge of the bank shall be equipped with an 18 in. (457 mm.) high ramp as described in Figure V-16 to assist in tipping the vehicle.

(f) The front and rear wheel tread settings, where adjustable, shall be at the position nearest to halfway between the minimum and maximum settings obtainable on the vehicle. Where only two settings are obtainable, the minimum setting shall be used.

(g) Vehicle overturn test-Sideways and rearward.

(i) The tractor shall be driven under its own power along the specified path of travel at a minimum speed of 10 m.p.h. (16 km./hr.) or maximum vehicle speed if under 10 m.p.h. (16 km./hr.) up the ramp as described in subdivision (e) of this subsection to induce sideways overturn.

(ii) Rear upset shall be induced by engine power with the tractor operating in gear to obtain 3-5 m.p.h. (4.8-8 km./hr.) at maximum governed engine r.p.m. preferably by driving forward directly up a minimum slope of two vertical to one horizontal. The engine clutch may be used to aid in inducing the upset.

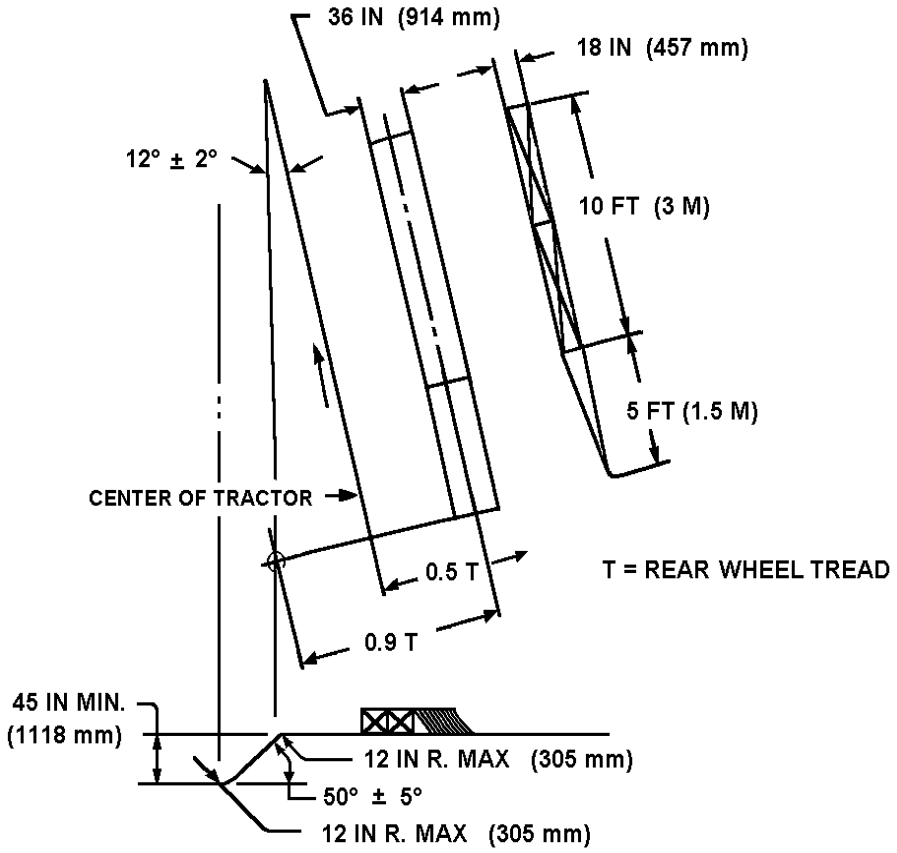

FIGURE V-16

(7) Other test procedures. When the field upset test is not used to determine ROPS performance, either the static test or the dynamic test, contained in subsection (8) or (9) of this section, shall be made.

WAC 296-155-960 (Cont.)

(8) Static test.

(a) Test conditions.

(i) The laboratory mounting base shall include that part of the tractor chassis to which the protective frame is attached including the mounting parts.

(ii) The protective frame shall be instrumented with the necessary equipment to obtain the required load deflection data at the locations and directions specified in Figures V-17, V-18, and V-19.

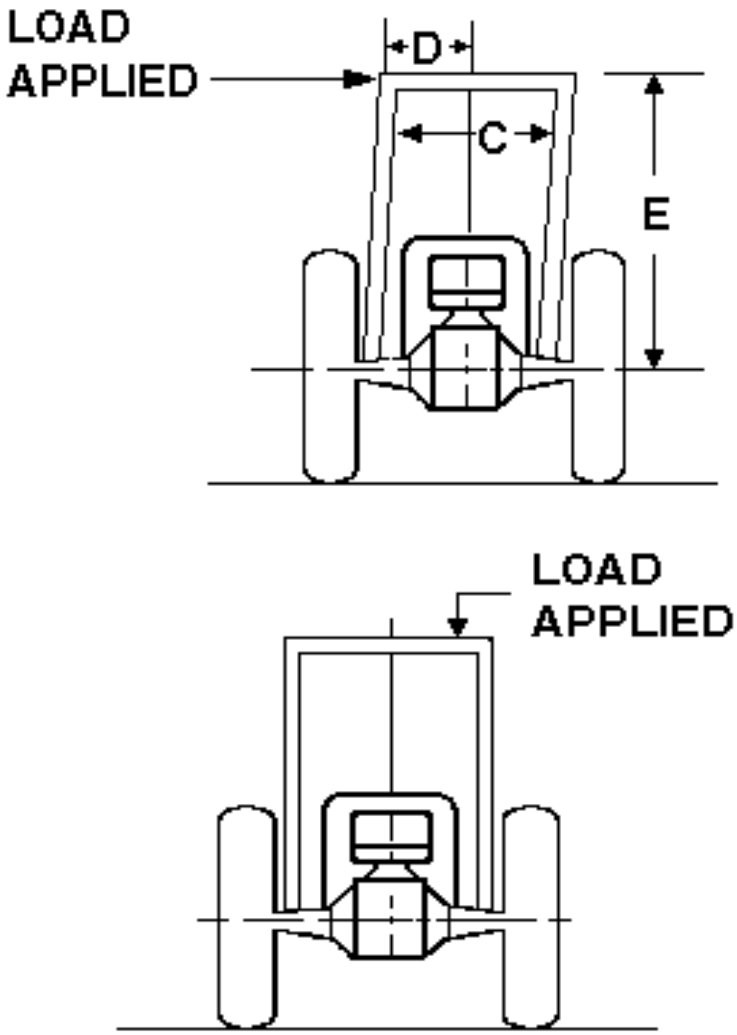

FIGURE V-17
Side load application

WAC 296-155-960 (Cont.)

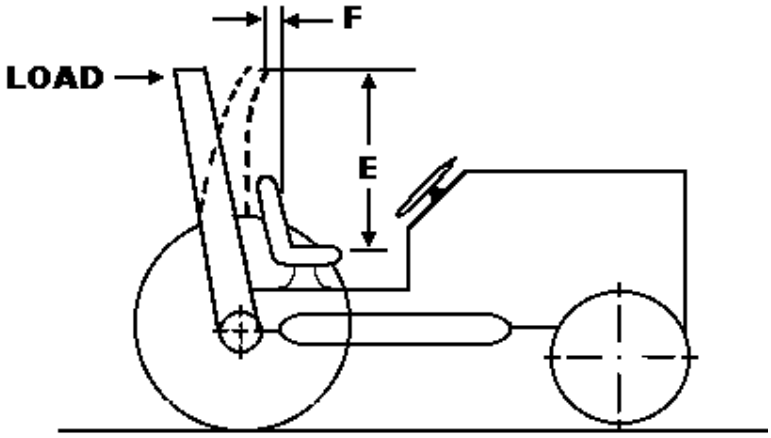

FIGURE V-18
Rear load application.

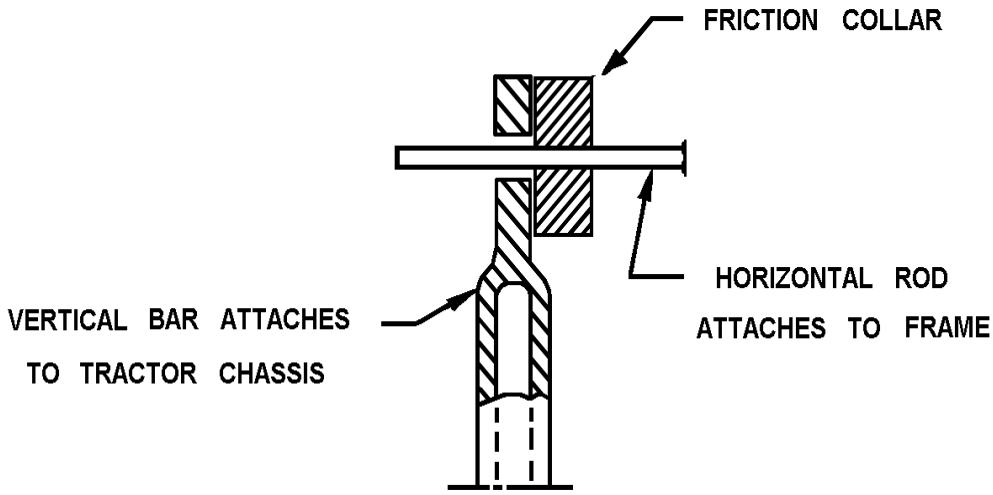

FIGURE V-19
Method of measuring instantaneous deflection.

(iii) The protective frame and mounting connections shall be instrumented with the necessary recording equipment to obtain the required load-deflection data to be used in calculating FSB (see subsection (1)(c) of this section). The gauges shall be placed on mounting connections before the installation load is applied.

(b) Test procedure.

(i) The side load application shall be at the upper extremity of the frame upright at a 90° angle to the centerline of the vehicle. The side load "L" shall be applied according to Figure V-17 "L" and "D" shall be recorded simultaneously. The test shall be stopped when:

(a) The strain energy absorbed by the frame is equal to the required input energy(E_{is}) or

(b) Deflection of the frame exceeds the allowable deflection, or

WAC 296-155-960 (Cont.)

(c) The frame load limit occurs before the allowable deflection is reached in the side load.

(ii) The L-D diagram, as shown by means of a typical example in Figure V-20, shall be constructed, using the data obtained in accordance with item (i) of this subdivision.

(iii) The modified L_m-D_m diagram shall be constructed according to item (ii) of this subdivision and according to Figure V-21.The strain energy absorbed by the frame (E_u) shall than be determined.

(iv) E_{is}, FER and FSB shall be calculated.

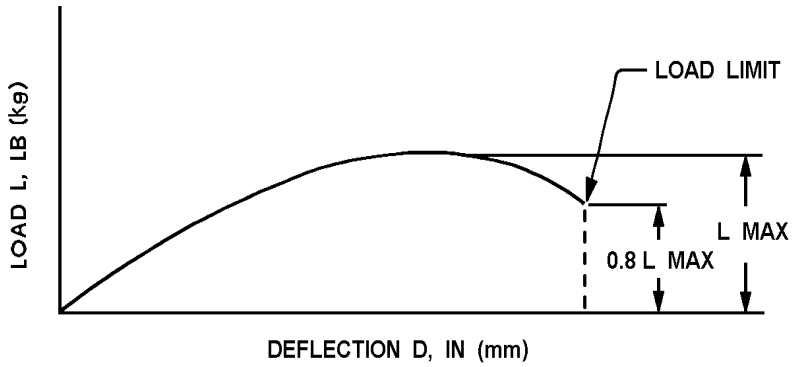

FIGURE V-20
Typical L-D diagram.

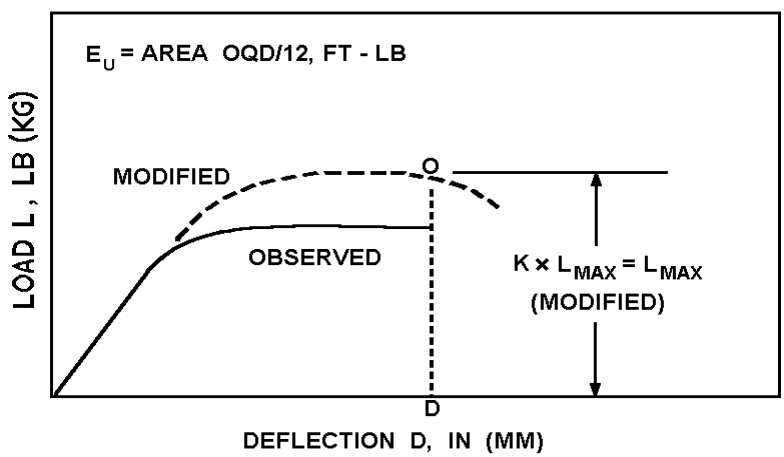

FIGURE V-21
Typical modified L_m-D_m diagram.

(v) The test procedure shall be repeated on the same frame utilizing L (rear input; see Figure V-19) and E_{ir}. Rear load application shall be uniformly distributed along a maximum projected dimension of 27 in. (686 mm.) and a maximum area of 160 sq. in. (1,032 sq. cm.) normal to the direction of load application. The load shall be applied to the upper extremity of the frame at the point which is midway between the centerline of the seat and the inside of the frame upright.

WAC 296-155-960 (Cont.)

(9) Dynamic test.

(a) Test conditions.

(i) The protective frame and tractor shall meet the requirements of subsection (6)(b) or (c) of this section, as appropriate.

(ii) The dynamic loading shall be produced by use of a 4,410 lb. (2,000 kg.) weight acting as a pendulum. The impact face of the weight shall be 27 plus or minus 1 in. by 27 plus or minus 1 in. (686 + or - 25 mm.) and shall be constructed so that its center of gravity is within 1 in. (25.4 mm.) of its geometric center. The weight shall be suspended from a pivot point 18-22 ft. (5.5-6.7 m.) above the point of impact on the frame and shall be conveniently and safely adjustable for height. (See Figure V-22.)

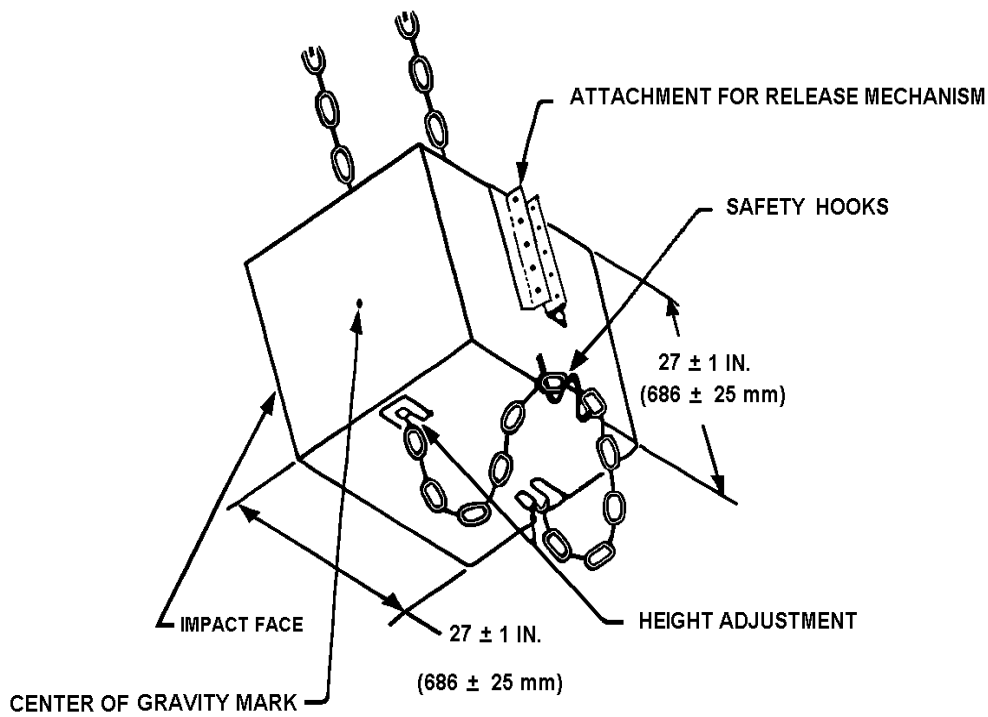

FIGURE V-22
Pendulum.

(iii) For each phase of testing, the tractor shall be restrained from moving when the dynamic load is applied. The restraining members shall be of 0.5-0.63 in. (12.5-16 mm.) steel cable and points of attaching restraining members shall be located an appropriate distance behind the rear axle and in front of the front axle to provide a 15°-30° angle between a restraining cable and the horizontal. The restraining member shall either be in the plane in which the center gravity of the pendulum will swing or more than one restraining cable shall give a resultant force in this plane. (See Figure V-23.)

WAC 296-155-960 (Cont.)

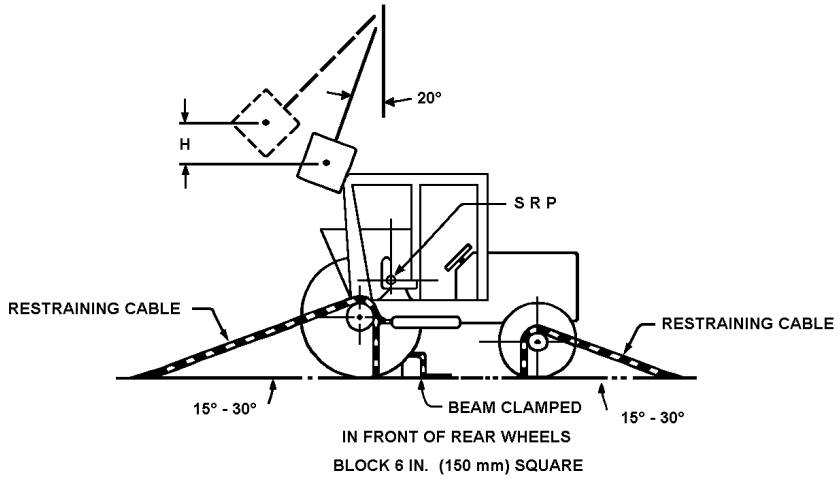

FIGURE V-23
Method of impact from rear.

(iv) The wheel tread setting shall comply with the requirements of subsection (6)(f) of this section. The tires shall have no liquid ballast and shall be inflated to the maximum operating pressure recommended by the tire manufacturer. With specified tire inflation, the restraining cables shall be tightened to provide tire deflection of 6-8 percent of nominal tire section width. After the vehicle is properly restrained, a wooden beam 6 x 6 in. (15 x 15 cm.) shall be driven tightly against the appropriate wheels and clamped. For the test to the side, an additional wooden beam shall be placed as a prop against the wheel nearest the operator's station and shall be secured to the floor so that it is held tightly against the wheel rim during impact. The length of this beam shall be chosen so that when it is positioned against the wheel rim it is at an angle of 25 -40° to the horizontal. It shall have a length 20-25 times its depth and a width two to three times its depth. (See Figures V-23 and V-24.)

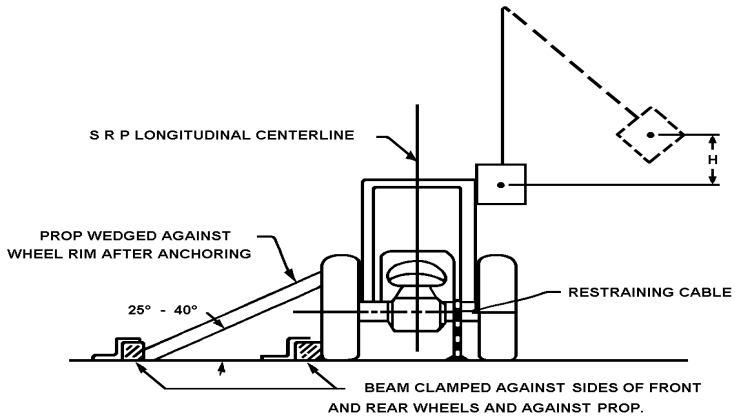

FIGURE V-24
Method of impact from side.

(v) Means shall be provided indicating the maximum instantaneous deflection along the line of impact. A simple friction device is illustrated in Figure V-24.

WAC 296-155-960 (Cont.)

(vi) No repair or adjustments may be carried out during the test.

(vii) If any cables, props, or blocking shift or break during the test, the test shall be repeated.

(b) Test procedure.

(i) General. The frame shall be evaluated by imposing dynamic loading to rear followed by a load to the side on the same frame. The pendulum dropped from the height (see definition "H" in subsection (1)(c) of this section) imposes the dynamic load. The position of the pendulum shall be so selected that the initial point of impact on the frame shall be in line with the arc of travel of the center of gravity of the pendulum. A quick release mechanism should be used but, if used, shall not influence the attitude of the block.

(ii) Impact at rear. The tractor shall be properly restrained according to subdivisions (a)(iii) and (iv) of this section. The tractor shall be positioned with respect to the pivot point of the pendulum such that the pendulum is 20° from the vertical prior to impact, as shown in Figure V-23. The impact shall be applied to the upper extremity of the frame at the point which is midway between the centerline of the seat and the inside of the frame upright of a new frame.

(iii) Impact at side. The block and restraining shall conform to subdivisions (a)(iii) and (iv) of this subsection. The point of impact shall be that structural member of the protective frame likely to hit the ground first in a sideways accidental upset. The side impact shall be applied to the side opposite that used for rear impact.

(10) Performance requirements.

(a) General.

(i) The frame, overhead weather shield, fenders, or other parts in the operator area may be deformed but shall not shatter or leave sharp edges exposed to the operator, or violate dimensions as shown in Figures V-17 and V-18 as follows:

D= 2 in. (51 mm.) inside of frame upright to vertical centerline of seat.

E= 30 in. (762 mm.).

F= Not less than 0 in. and not more than 12 in. (305 mm.), measured at centerline front of seat backrest to crossbar along the line of load application as shown in Figure V-17.

G= 24 in. (610 mm.).

(ii) The material and design combination used in the protective structure must be such that the structure can meet all prescribed performance tests at zero degrees Fahrenheit in accordance with WAC 296-155-955 (7)(b)(iv).

(b) Vehicle overturn performance requirements. The requirements of this subsection (10) must be met in both side and rear overturns.

WAC 296-155-960 (Cont.)

(c) Static test performance requirements. Design factors shall be incorporated in each design to withstand an overturn test as prescribed in this subsection (10). The structural requirements will be generally met if FER is greater than 1 and FSB is greater than K-1 in both side and rear loadings.

(d) Dynamic test performance requirements. Design factors shall be incorporated in each design to withstand the overturn test prescribed in this subsection (10). The structural requirements will be generally met if the dimensions in this subsection (10) are adhered to in both side and rear loads.

[Order 74-26, § 296-155-960, filed 5/7/74, effective 6/6/74.]

WAC 296-155-965 Overhead protection for operators of agricultural and industrial tractors.

(1) General.

(a) Purpose. When overhead protection is provided on wheel-type agricultural and industrial tractors, the overhead protection shall be designed and installed according to the requirements contained in this section. The provisions of WAC 296-155-955 for rubber-tired dozers and rubber-tired loaders may be used in lieu of the standards contained in this section. The purpose of the standard is to minimize the possibility of operator injury resulting from overhead hazards such as flying and falling objects, and at the same time to minimize the possibility of operator injury from the cover itself in the event of accidental upset.

(b) Applicability. This section applies to wheel-type agricultural tractors used in construction work and to wheel-type industrial tractors used in construction work. See WAC 296-155-960 (1) and (3). In the case of machines to which WAC 296-155-625 (relating to site clearing) also applies, the overhead protection may be either the type of protection provided in WAC 296-155-625 or the type of protection provided by this section.

(2) Overhead protection. When overhead protection is installed on wheel-type agricultural or industrial tractors used in construction work, it shall meet the requirements of this subsection. The overhead protection may be constructed of a solid material. If grid or mesh is used, the largest permissible opening shall be such that the maximum circle which can be inscribed between the elements of the grid or mesh is 1.5 in. (38 mm.) in diameter. The overhead protection shall not be installed in such a way as to become a hazard in the case of upset.

(3) Test procedures-General.

(a) The requirements of WAC 296-155-960 (5), (6) and (7) shall be met.

(b) Static and dynamic rear load application shall be uniformly distributed along a maximum projected dimension of 27 in. (686 mm.) and a maximum area of 160 in.^{2} (1,032 cm.^{2}) normal direction of load application. The load shall be applied to the upper extremity of the frame at the point which is midway between the centerline of the seat and the inside of the frame upright.

(c) The static and dynamic side load application shall be uniformly distributed along a maximum projected dimension of 27 in. (686 mm.) and a maximum area of 160 in.^{2} (1,032 cm.^{2}) normal to the direction of load application. The direction of load application is the same as in WAC 296-155-960 (8) and (9). To simulate the characteristics of the structure during an upset, the center of load application may be located from a point 24 in. (610 mm.) (K) forward to 12 in. (305 mm.) (K) forward to 12 in. (305 mm.) (L) rearward of the front of the seat backrest to best utilize the structural strength. See Figure V-25.

WAC 296-155-965 (Cont.)

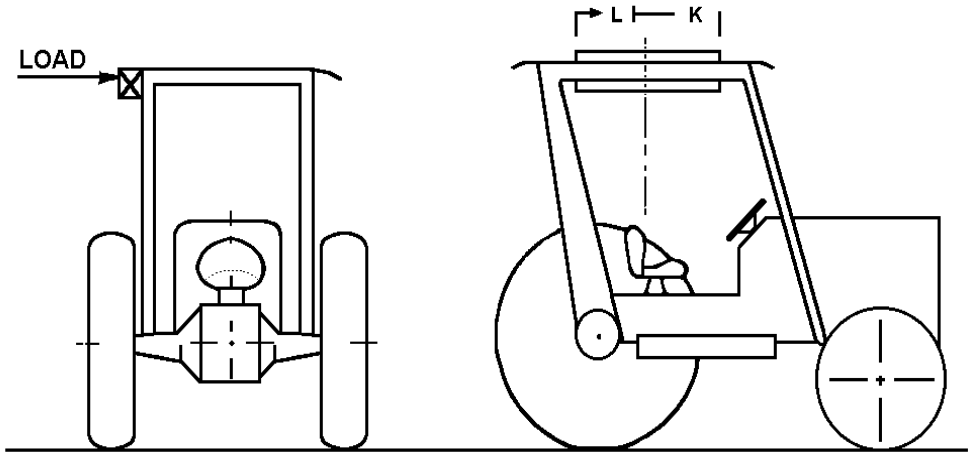

FIGURE V-25
Location for side load.

(4) Drop test procedures.

(a) The same frame shall be subjected to the drop test following either the static or dynamic test.

(b) A solid steel sphere or material of equivalent spherical dimension weighing 100 lb.

(45.4 kg.) shall be dropped once from a height 10 ft. (3,048 mm.) above the overhead cover.

(c) The point of impact shall be on the overhead cover at a point within the zone of protection as shown in Figure V-26, which is furthest removed from major structural members.

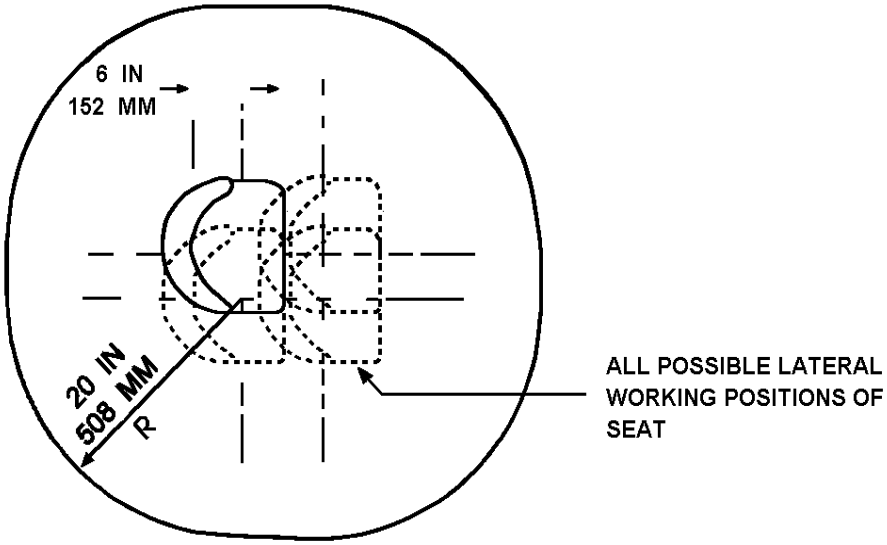

FIGURE V-26
Zone of protection for drop test.

WAC 296-155-965 (Cont.)

(5) Crush test procedure.

(a) The same frame shall be subjected to the crush test following the drop test and static or dynamic test.

(b) The test load shall be applied as shown in Figure V-27 with the seat positioned as specified in WAC 296-155-960 (5)(d). Loading cylinders shall be pivotally mounted at both ends. Loads applied by each cylinder shall be equal within 2 percent, and the sum of the loads of the two cylinders shall be two times the tractor weight as set forth in WAC 296-155-960 (6)(a). The maximum width of the beam illustrated in Figure V-27 shall be 6 in. (152 mm.).

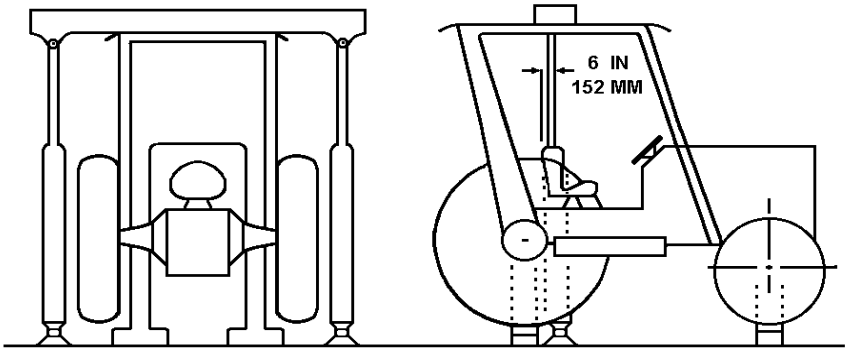

FIGURE V-27
Method of load application for crush test.

(6) Performance requirements.

(a) General. The performance requirements set forth in WAC 296-155-960 (10)(b), (c) and (d) shall be met.

(b) Drop test performance requirements.

(i) Instantaneous deformation due to impact of the sphere shall not enter the protected zone as illustrated in Figures V-25, V-26, and V-28.

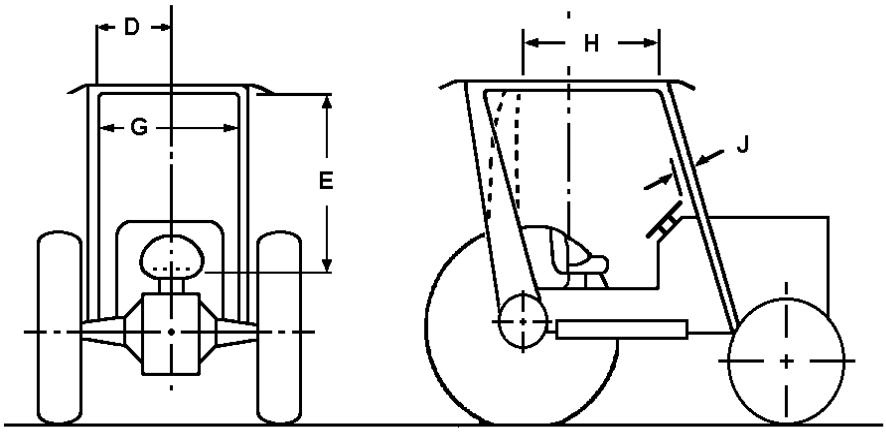

FIGURE V-28
Protected zone during crush and drop tests.

WAC 296-155-965 (Cont.)

(ii) In addition to the dimensions set forth in WAC 296-155-960(10)(a)(i) the following dimensions apply to Figure V-28:

H = 17.5 in. (444 mm.).

J = 2 in. (50.8 mm.) measured from the outer periphery of the steering wheel.

(c) Crush test performance requirements. The protected zone as described in Figure V-28 must not be violated.

(7) Source of standard. This standard is derived from, and restates, the portions of Society of Automotive Engineers Standard J167 which pertain to overhead protection requirements. The full title of the SAE standard is: Protective Frame with Overhead Protection-Test Procedures and performance requirements. The SAE standard shall be resorted to in the event that questions of interpretation arise. The SAE standard appears in the 1971 SAE Handbook.

[Order 74-26, § 296-155-965, filed 5/7/74, effective 6/6/74.]