Saws and Cutting Heads

WAC 296-806-480

Summary

- If your specific machine or operation isn't listed here, then be sure to follow any of the following requirements that apply:
  - General requirements for all saws and cutting heads in this section
  - General requirements for all saws in this section
  - General requirements for all cutting heads in this section
  - "Requirements for All Machines" found in this chapter, WAC 296-806-200 and WAC 296-806-300.

This section applies to fixed machines using saws or cutting heads that are used on any material.

Reference:

➢ For requirements on hand-held tools, see Portable Power Tools, Chapter 296-807 WAC.

YOUR RESPONSIBILITY:

To make sure machines using saws and cutting heads meet these requirements

GENERAL REQUIREMENTS FOR ALL SAWS AND CUTTING HEADS

You must

Protect employees using saws and cutting heads
WAC 296-806-48002 480-7

Make sure saws and cutting heads are sharpened and tensioned by qualified people
WAC 296-806-48004 480-7

Saws and Cutting Heads

WAC 296-806-480

Summary

SAWS

General requirements for all saws

Make sure saws are safe to use
WAC 296-806-48006 480-8

Requirements for all circular saws

Make sure all circular saws meet these requirements
WAC 296-806-48008 480-9

Make sure circular saw gages meet these requirements
WAC 296-806-48010 480-9

Guard hand-fed circular table saws
WAC 296-806-48012 480-10

Provide kickback protection for employees using hand-fed circular table ripsaws when ripping wood products
WAC 296-806-48014 480-12

Safeguard self-feed circular saws
WAC 296-806-48016 480-14

Provide kickback protection for self-feed circular ripsaws when ripping wood products
WAC 296-806-48018 480-14

Guard circular resaws
WAC 296-806-48020 480-15

Provide spreaders for circular resaws
WAC 296-806-48022 480-15

Summary

Requirements for Specific Circular Saws

Protect employees from automatic saw hazards
WAC 296-806-48024 480-16

Guard inverted swing (jump) saws
WAC 296-807-48026 480-16

Guard miter saws
WAC 296-806-48028 480-17

Guard radial saws
WAC 296-806-48030 480-19

Limit the travel of radial saws
WAC 296-806-48032 480-21

Provide kickback protection for radial saws when ripping wood
WAC 296-806-48034 480-22

Guard revolving double arbor saws
WAC 296-806-48036 480-24

Guard swing saws
WAC 296-806-48038 480-24

Limit the travel of swing saws
WAC 296-806-48040 480-25

Requirements for Band Saws and Drag Saws

Make sure bandsaws meet these requirements
WAC 296-806-48042 480-27

Protect employees from drag saw hazards
WAC 296-806-48044 480-28

Saws and Cutting Heads

WAC 296-806-480

Summary

CUTTING HEADS

General Requirements for All Cutting Heads

Maintain and balance knives and cutting heads
WAC 296-806-48046 480-29

Boring and mortising machines

Make sure boring and mortising machines meet these requirements
WAC 296-806-48048 480-30

Chipper and Hog Mills

Follow these requirements for chipper mills
WAC 296-806-48050 480-31

Follow these requirements for hog mills
WAC 296-806-48052 480-32

Protect employees from falling into chipper and hog mills
WAC 296-806-48054 480-32

Jointers

Make sure jointers with horizontal cutting heads meet these requirements
WAC 296-806-48056 480-33

Guard horizontal cutting heads on hand-fed jointers
WAC 296-806-48058 480-33

Guard vertical cutting heads on jointers
WAC 296-806-48060 480-34

Summary

Molding, Sticking and Matching Machines

Make sure molding, sticking and matching machines meet these requirements
WAC 296-806-48062 480-34

Panel Raisers and Other Similar Machines

Guard hand-fed panel raisers and other similar machines
WAC 296-806-48064 480-35

Planers

Make sure planers with a horizontal cutting head meet these requirements
WAC 296-806-48066 480-35

Guard planers
WAC 296-806-48068 480-36

Guard planer feed rolls
WAC 296-806-48070 480-36

Provide kickback protection on planers running stock of varied thickness
WAC 296-806-48072 480-37

Shapers

Make sure shapers meet these requirements
WAC 296-806-48074 480-38

Tenoning Machines

Guard tenoning machine feed chains and sprockets
WAC 296-806-48076 480-39

Guard tenoning machines
WAC 296-806-48078 480-39

Saws and Cutting Heads

WAC 296-806-480

Summary

Veneer Machinery

Guard veneer cutters and wringer knives
WAC 296-806-48080 480-40

Guard veneer clippers
WAC 296-806-48082 480-40

Follow these requirements for guarding guillotine cutters
WAC 296-806-48084 480-41

Provide mechanisms to stop power-driven guillotine cutters
WAC 296-806-48086 480-42

Prohibit riders on veneer slicer carriages
WAC 296-806-48088 480-42

GENERAL REQUIREMENTS FOR ALL SAWS AND CUTTING HEADS

WAC 296-806-48002

Protect employees using saws and cutting heads

You must

- Provide safeguarding to protect employees from the hazards of feed rolls.
- Provide types and sizes of push sticks or push blocks that are suitable for the work being done.
- Use a comb (featherboard) or a suitable jig to protect employees when a standard guard can't be used.

Note:

➢ Operations where you may need a comb or jig include:
- Dadoing
- Grooving
- Jointing
- Moulding
- Rabbeting

WAC 296-806-48004

Make sure saws and cutting heads are sharpened and tensioned by qualified people

You must

- Make sure people who sharpen or tension saw blades or cutters have demonstrated skill in this area.

Rule

GENERAL REQUIREMENTS FOR ALL SAWS

WAC 296-806-48006

Make sure saws are safe to use

You must

- Immediately remove from service a saw that has **any of the following** problems:
  - Cracked
  - Dull
  - Badly set
  - Improperly filed
  - Improperly tensioned
- Immediately clean any saw where gum has begun to stick on the sides.
- Eliminate unintended fence and table movement during operation.
- Keep hinged tables and fences firmly secured and in true alignment for all positions.

REQUIREMENTS FOR ALL CIRCULAR SAWS

WAC 296-806-48008

Make sure all circular saws meet these requirements

You must

- Protect employees from contacting the portion of the saw beneath or behind the table by covering it with either:
  - An exhaust hood, if one is required
    or
  - A guard
- Prohibit workers from inserting wedges between the saw disk and the collar to form a wobble saw.

WAC 296-806-48010

Make sure circular saw gages meet these requirements

You must

- Make sure circular saw gages slide in grooves or tracks that are accurately machined to maintain exact alignment with the saw for all positions of the guide.

Note:

➢ Circular saw gages are also referred to as miter or positioning gages.

Rule

WAC 296-806-48012

Safeguard hand-fed circular table saws

You must

- Guard each hand-fed circular saw with a hood that completely encloses both the portion of the saw that is above both:
  - The table
    and
  - The material being cut
- Make sure the hood is designed and constructed to do **all** of the following:
  - Protect the operator from flying splinters and broken saw teeth
  - Strong enough to resist damage from reasonable operation, adjustments, and handling
  - Made of material soft enough to not break saw teeth

Note:

➢ Hoods should be made of material that:
- Doesn't shatter when broken
- Isn't explosive
- Is less combustible than wood

You must

- Mount the hood so it does **all** of the following:
  - Operates positively and reliably
  - Maintains true alignment with the saw
  - Resists any side thrust or force that could throw it out of line

-Continued-

WAC 296-806-48012 (Continued)

You must

- Make sure the hood:
  - Allows the material to be inserted or sawed without any considerable resistance
    and
  - Does one of the following:
    - Automatically remains in contact with the material being cut
      or
    - Is manually adjusted to within 1/4 inch of the material being cut

Exemption:

➢ Saws may be guarded with a fixed enclosure, fixed barrier guard, or a manually adjusted guard when specific conditions prevent using a standard automatic adjusting guard. Alternative guards have to both:

- Provide protection equivalent to a standard automatic adjusting guard
  and
- Be used according to the manufacturer's instructions with sufficient supervision to comply with this requirement.

Rule

WAC 296-806-48014

Provide kickback protection for employees using hand-fed circular table ripsaws when ripping wood products

Definition:

Ripping is a sawing operation made:

- Through the thickness of the workpiece with the grain of natural wood
- Along the long dimension of a rectangular workpiece,
  and
- Usually parallel to that edge on reconstituted wood products.
- This can also be described as cutting stock to width. Two or more pieces result from the operation.

You must

- Provide a spreader or riving knife that's:
  - Made of hard-tempered steel or its equivalent
  - Thinner than the saw kerf
  - Wide enough to provide sufficient stiffness and rigidity to resist any reasonable side thrust or blow that could bend or throw it out of position
  - Attached so it remains in true alignment with the saw when the saw or table's tilted

Note:

➢ The spreader or riving knife should:
- Prevent material from either squeezing the saw or being thrown back at the operator.
- Be placed so there is 1/2 inch or less space between it and the back of the saw when the largest saw's mounted in the machine

-Continued-

WAC 296-806-48014 (Continued)

Exemption:

- You don't have to provide a spreader or riving knife when grooving, dadoing, or rabbeting. When you finish these operations, replace the spreader immediately.

You must

- Provide nonkickback fingers or dogs that are:
  - Located so they prevent the saw from either picking up the material or throwing the material back towards the operator
  - Designed to hold any thickness of material being cut.

Note:

➢ Kickbacks occur when a saw seizes the stock and hurls it back at the operator. This can happen when the stock twists and binds against the side of the blades or is caught in the teeth. Kickbacks occur more often when cutting parallel to the wood grain (ripping) than when cross cutting. Common contributors to kickbacks include:
  - A blade that isn't sharpened.
  - A blade set at an incorrect height.
  - Poor quality lumber, such as frozen lumber, lumber with many knots, or foreign objects, such as nails.

Rule

WAC 296-806-48016

Safeguard self-feed circular saws

You must

- Provide saws and feed rolls with a hood or guard to protect the operator from contacting the in-running rolls.
- Make sure the guard is constructed of heavy material, preferably metal.
- Make sure the distance between the bottom of the guard and the plane formed by the bottom or working surface of the feed rolls meets the requirements of Table 200-1, Largest Allowable Guard Opening, in WAC 296-806-20042.

WAC 296-806-48018

Provide kickback protection for self-feed circular ripsaws when ripping wood products

You must

- Provide saws with sectional nonkickback fingers that meet **all** of the following requirements:
  - They cover the full width of the feed roll
  - They are located in front of the saw
  - They are arranged so they keep continuous contact with the material being fed

WAC 296-806-48020
Guard circular resaws

You must

- Provide each circular resaw with a metal hood or shield that is:
  - Located above the saw
  - Designed to protect the operator from flying splinters or broken saw teeth

WAC 296-806-48022
Provide spreaders for circular resaws

Exemption:

- This requirement doesn't apply to self-feed saws with a roller or wheel at the back of the saw.

You must

- Provide a spreader that's **all** of the following:
  - Securely fastened behind the saw
  - Slightly thinner than the saw kerf
  - Slightly thicker than the saw disk

Rule

REQUIREMENTS FOR SPECIFIC CIRCULAR SAWS

WAC 296-806-48024
Protect employees from automatic saw hazards

You must

- Make sure automatic saws that stroke continuously without the operator controlling each stroke are **not** used where employees could be exposed to:
  - Saw hazards during operations such as loading, clamping, cutting, or unloading.

WAC 296-806-48026
Guard inverted swing (jump) saws

You must

1) Guard jump saws with a hood that both:
   - Covers the part of the saw that's exposed above the top of the table or above the material being cut
     and
   - Automatically adjusts to the thickness of the material being cut and remains in contact with it
2) Provide a holding device that will prevent stock from moving while cutting materials.
3) Provide warning signs, stickers, or placards when the pinching hazard created by the holding device can't be eliminated by design.

-Continued-

WAC 296-806-48026 (Continued)

4) Provide the following for automatically fed jump saws
   - Place guards over the roller conveyor to prevent persons from walking into or over the saw.
   - Enclose jump saws when below the table or roller conveyor and not in actual use
   - Install a positive stop to prevent the saw from passing the front edge of the roller conveyor or table
   - Make sure the throat in the table or roller conveyor is only wide enough to permit unobstructed operation of the saw

WAC 296-802-48028

Guard miter saws

IMPORTANT:

- Miter saws include:
  - Miter
  - Compound miter
  - Slide miter
  - Compound slide miter

You must

1) Guard miter saws with an upper hood that completely encloses the upper half of the blade.
2) Provide a method to protect employees from contacting the blade underneath the table while in its recommended carrying position.

-Continued-

Rule

WAC 296-806-48028 (Continued)

You must

3) Guard the lower blade:

- By making sure the teeth are guarded at least 3/4 of an inch beyond the root of the teeth, toward the center of the blade, except for a maximum 45 degree exposure of quadrant C when in the full retract position. See Illustration 480-1, Miter Saw Guarding.
- With a retractable guard that can't be locked in any position

Illustration 480-1
MITER SAW GUARDING

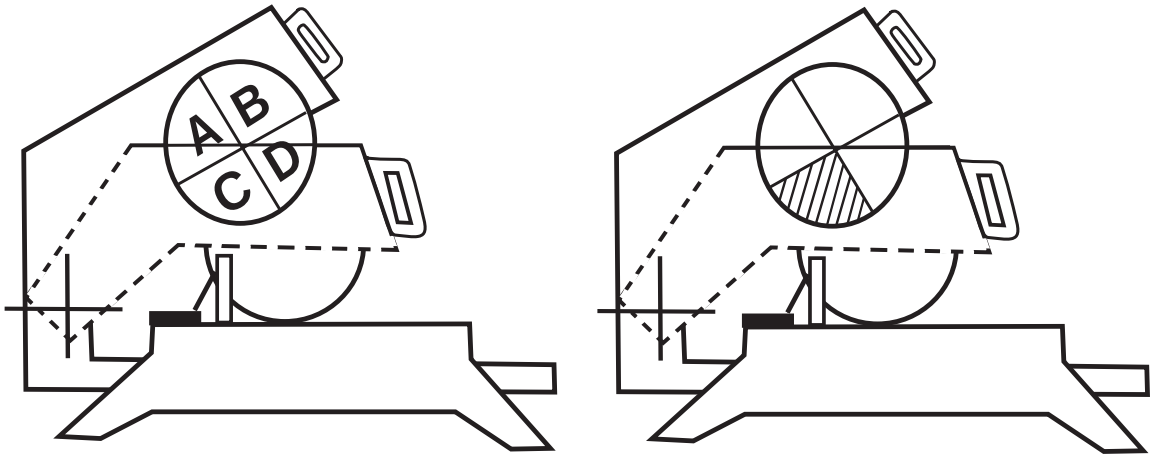

WAC 296-806-48030

Guard radial saws

You must

- Make sure the radial saw has a hood that does **all** of the following:
  - Completely encloses the upper portion of the blade down to a point that includes the end of the saw arbor
  - Protects the operator from flying splinters and broken saw teeth
  - Deflects sawdust away from the operator
- Provide a lower blade guard that does **all** of the following (see Guard radial saws, Illustration 480-2):
  - Guards the sides of the lower exposed portion of the blade to its full diameter
  - Automatically adjusts to the thickness of the stock being cut
  - Remains in contact with the stock to provide the maximum protection possible for the operation being performed
    or
  - Is a manually adjusted (wing) guard that:
    - Is made of material strong enough to withstand the forces put on it. Suggested materials include polycarbonates or expanded metal.
    - Has edges that are smooth so no hazards from the guard exist
    - Extends a minimum of 8 inches to both the front and arbor-end sides

-Continued-

Rule

WAC 296-806-48030 (Continued)

- Is adjustable in a vertical plane to the different thickness of stock so the gap is 3/8 inch or less between the bottom of the guard and the top of the stock.

Exemption:

- Saws may be guarded with a fixed enclosure, fixed barrier guard, or a manually adjusted guard when specific conditions prevent using a standard, automatic adjusting guard. Alternative guards have to both:
  - Provide protection equivalent to a standard automatic adjusting guard
    and
  - Be used according to the manufacturer's instructions with sufficient supervision to meet this requirement.

Illustration 480-2
GUARD RADIAL SAWS

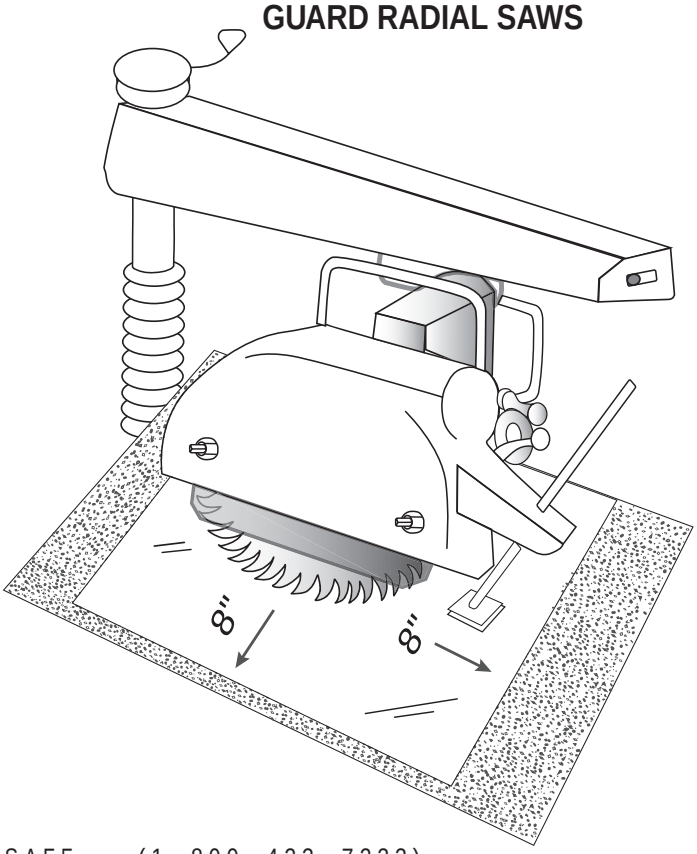

WAC 296-806-48032

Limit the travel of radial saws

You must

- Provide an adjustable stop that prevents:
  - Forward travel of the blade beyond the position necessary to complete the cut **and**
  - Any part of the saw blade from extending beyond the front edge of the work support table
- Install the saw so that the front end is slightly higher than the rear in order to cause the cutting head to return to the starting position when released by the operator.
- Make sure the cutting head or carriage does **all** of the following:
  - Returns gently to the rest or starting position when released by the operator
  - Doesn't bounce or recoil when reaching the rest or starting position
  - Remains in the rest or starting position

Rule

WAC 296-806-48034

Provide kickback protection for radial saws used for ripping wood products

You must

- Provide nonkickback fingers or dogs that are both:
  - Located on both sides of the saw to resist the tendency of the saw to pick up material or throw it back toward the operator
    and
  - Designed to hold any thickness of material being cut
- Make sure when ripping or ploughing that you feed the material from the end where the blade teeth enter the upper guard, which is against the direction in which the saw turns. See Ripping with a radial arm saw, Illustration 480-3.
- Make sure the direction of saw rotation is clearly marked on the hood.
- Fasten a permanent label at the rear of the guard hood, at about the level of the arbor, where the blade teeth exit the upper hood during saw operation that:
  - Reads, “DANGER: DO NOT RIP OR PLOUGH FROM THIS END”
  - Is colored standard danger red
  - Isn't less than 1 1/2 inches by 3/4 inch with standard proportional lettering

Illustration 480-3

RIPPING WITH A RADIAL ARM SAW

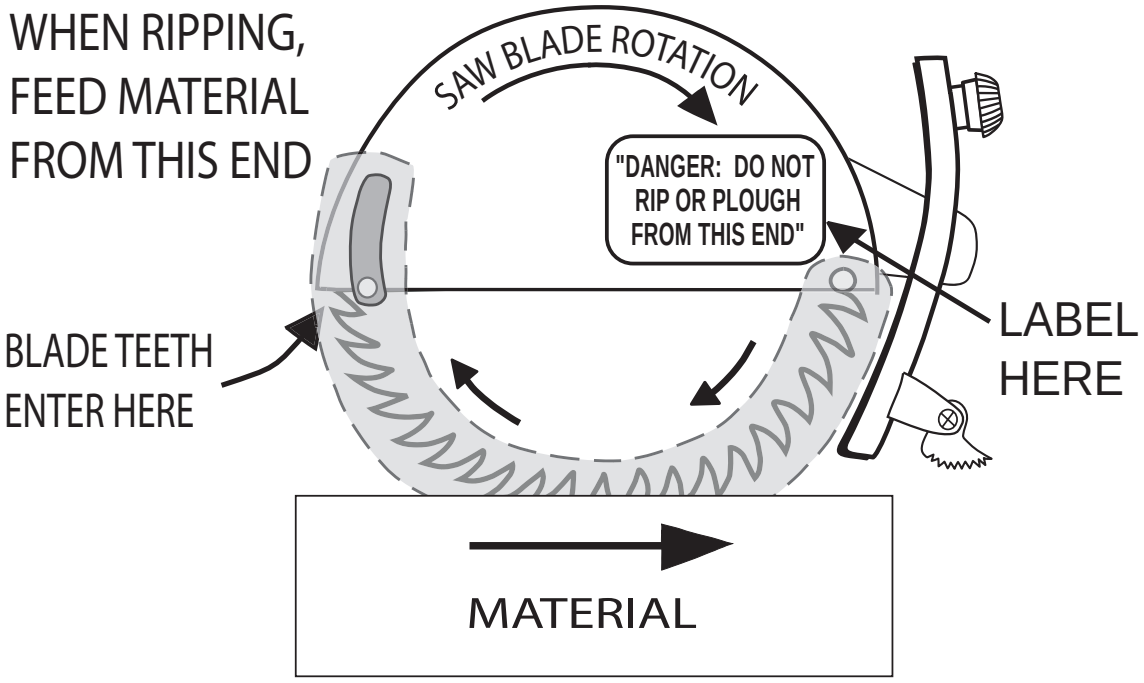

RIPPING

Rule

WAC 296-806-48036

Guard revolving double arbor saws

You must

- Guard each revolving double arbor saw with a hood that completely encloses the portion of the saw that's above both:
  - The table
    and
  - The material being cut

Note:

➢ Hoods should be made of material that:
- Doesn't shatter when broken
- Isn't explosive
- Is less combustible than wood

WAC 296-806-48038

Guard swing saws

IMPORTANT:

This section applies to swing saws mounted above the table.

You must

- Provide saws with a hood that encloses **all** of the following:
  - Upper half of the saw
  - Arbor end
  - Point of operation in all positions of the saw

-Continued-

WAC 296-806-48038 (Continued)

You must

- Make sure the hood protects operators from flying splinters and broken saw teeth
- Make sure the lower blade guard will automatically cover the lower portion of the blade by dropping on top of and remaining in contact with the table or the material being cut.

Exemption:

- Saws may be guarded with a fixed enclosure, fixed barrier guard, or a manually adjusted guard when specific conditions prevent using a standard, automatic adjusting guard. Alternative guards have to:
  - Provide protection equivalent to a standard automatic adjusting guard
    and
  - Be used according to the manufacturer's instructions with sufficient supervision to meet this requirement.

WAC 296-806-48040

Limit the travel of swing saws

IMPORTANT:

This section applies to swing saws that are mounted above the table.

You must

- Provide saws with a device that:
  - Automatically returns the saw to the back of the table when the saw is released at any point in its travel
  - Doesn't depend on a rope, cord, or spring to function properly

-Continued-

Rule

WAC 296-806-48040 (Continued)

You must

- Make sure devices that use a counterweight meets these requirements:
  - The bolts supporting the bar and the counterweight use cotter pins
  - The counterweight is prevented from dropping by **one** of these methods:
    - A bolt passing through both the bar and the counterweight
    - A bolt through the extreme end of the bar
    - A safety chain to hold it to the bar if the counterweight doesn't completely encircle the bar
- Provide limit chains or another equally effective device to prevent the saw from swinging either:
  - Beyond the front or back edge of the table
    or
  - Forward to a position where the gullets of the lowest saw teeth will rise above the table top.

REQUIREMENTS FOR BAND SAWS AND DRAG SAWS

WAC 296-806-48042

Make sure band saws meet these requirements

You must

- Enclose or guard all portions of the blade except for the working portion of the blade between the guide rolls and the table.
- Make sure the guard for the portion of the blade between the sliding guide and the wheel guard meets these requirements:
  - Protects the front and outer side of the blade
  - Is self-adjusting to move with the guide
  - Adjusts so the gap between the guide rolls and stock is as small as is practical
- Fully enclose band saw wheels with wheel guards that meet **both** of the following requirements:
  - The outside periphery of the wheel enclosure is solid
    and
  - The front and back of the wheels are enclosed by solid material, wire mesh, or perforated metal.
- Make sure the material used for wheel guards meets these requirements:
  - Wire mesh and perforated metal guards:
    - Are at least 0.037 inch (U.S. Gage No. 20) thick
    - Have openings in them that are 3/8 inch or less
  - Solid material has strength and firmness equivalent to a wire mesh or perforated steel guard
- Make sure band saws have a tension control device to indicate the proper tension for standard saws used on the machine.

Rule

WAC 296-806-48044

Protect employees from drag saw hazards

You must

- Protect employees passing near a drag saw by either:
  - Providing a 4-foot clearance when the saw is at the extreme end of the stroke **or**
  - Enclosing the saw and its driving mechanism, if you can't provide a 4-foot clearance.

GENERAL REQUIREMENTS FOR ALL CUTTING HEADS

WAC 296-806-48046

Maintain and balance knives and cutting heads

You must

- Make sure knives and cutting heads are kept:
  - Sharp
  - Properly adjusted
  - Firmly secured
- Make sure knives are properly balanced when 2 or more are used in one cutting head.

Rule

BORING AND MORTISING MACHINES

WAC 296-806-48048

Make sure boring and mortising machines meet these requirements

Exemption:

- This section doesn't apply to drill presses, boring machines, or mortising machines if both of the following apply:
  - The downward stroke of the chuck and bit is controlled manually by the operator
    and
  - The chuck and bit automatically rises to the start position when control is released

You must

- Completely enclose universal joints on spindles of boring machines to prevent accidental contact by the operator.
- Make sure you don't use safety bit chucks that have projecting set screws
- Enclose the top of the cutting chain and driving mechanism.
- Prevent a counterweight, when used, from dropping by one of the following, or an equivalent method:
  - Securing it to a bar by one of the following:
    - A bolt passing through both the bar and the counterweight
    - A bolt through the extreme end of the bar
    - A safety chain to hold it to the bar if the counterweight doesn't completely encircle the bar
      or
    - Suspending it by a chain or wire rope and having it travel in a pipe or other suitable enclosure if it could fall and injure an employee.

Note:

➢ Boring bits should be provided with a guard that will enclose all portions of the bit and chuck above the material being worked.

CHIPPER AND HOG MILLS

WAC 296-806-48050

Follow these requirements for chipper mills

Exemption:

- This section doesn't apply to mobile chippers.

Reference:

➢ Safety requirements for mobile chippers can be found in Pruning, Repairing, Maintaining and Removing Trees and Cutting Brush, Section 9.6, ANSI Z133.1-2000.

You must

1) Arrange the feed system so the operator doesn't stand in direct line with the chipper blades or spout (hopper).
2) Protect the operator from chips or chunks being thrown out while feeding the machine.
3) Enclose the chipper spout to a height or distance of at least 40 inches from the floor or the operator's station, whichever is higher.
4) Provide a mirror or other device to allow monitoring of material when the operator can't readily observe the material being fed into the chipper.

Rule

WAC 296-806-48052

Follow these requirements for hog mills

You must

1) Make sure that feed chutes are at least 40 inches from the knives or feed roll.
2) Provide baffles or other suitable safeguards to prevent material from being thrown from the hog mill.

WAC 296-806-48054

Protect employees from falling into chipper and hog mills

You must

- Protect employees working near the feed openings of chipper and hog mills from falling into the openings by providing **at least one** of the following:
  - A safety belt (or harness) and a lifeline short enough to prevent workers from falling into the mill
  - Barriers or other types of protective guarding

Reference:

➢ See, Railing, toeboards and cover specifications for requirements on guardrails used as barriers, in WAC 296-24-75011.

JOINTERS

WAC 296-806-48056

Make sure jointers with horizontal cutting heads meet these requirements

You must

- Make sure the cutting head on hand-fed jointers is cylindrical:
  - Install and adjust the knife blade so it does not protrude more than 1/8 inch beyond the body of the head
- Make sure the opening in the table meets **all** of the following:
  - Is kept as small as possible
  - The clearance between the edge of the rear table and the cutting head is not more than 1/8 inch
  - The table throat opening isn't more than 2 1/2 inches when the tables are set or aligned with each other for zero cut

WAC 296-806-48058

Guard horizontal cutting heads on hand-fed jointers

You must

- Provide jointers with an automatic guard on the working side of the fence or gage that does **all** of the following:
  - Covers all sections of the head
  - Effectively keeps the operator's hand from contacting the revolving knives.
  - Automatically adjusts to cover the unused portion of the head
  - Remains in contact with the material at all times
- Provide jointers with a guard that covers the section of the head behind the gage or fence.

Rule

WAC 296-806-48060

Guard vertical cutting heads on jointers

You must

- Provide each jointer that has a vertical cutting head with an exhaust hood or other type of guard that completely encloses the revolving head except for a slot that's wide enough for the material being jointed.

MOLDING, STICKING AND MATCHING MACHINES

WAC 296-806-48062

Make sure molding, sticking and matching machines meet these requirements

You must

- Make sure all cutting heads, and saws if used, are covered by a guard that:
  - Is metal
  - Forms all or part of the exhaust hood if an exhaust system is used
- Make sure a guard constructed from:
  - Sheet metal is at least 1/16 inch thick.
  - Cast iron is at least 3/16 inch thick.
- Make sure feed rolls are guarded by a hood or other suitable guard that both:
  - Prevents the operator's hand from contacting the in-running rolls at any point **and**
  - Is attached to the frame carrying the rolls so it adjusts for any thickness of stock

PANEL RAISERS AND OTHER SIMILAR MACHINES

WAC 296-806-48064

Guard hand-fed panel raisers and other similar machines

You must

- Guard the cutting heads of hand-fed panel raisers and other similar machines by enclosing the cutting head with either:
  - A fixed guard such as a cage
    or
  - An adjustable guard designed to keep the operator's hand away from the cutting edge

PLANERS

WAC 296-806-48066

Make sure planers with a horizontal cutting head meet these requirements

You must

- Make sure the cutting head on hand-fed planers is cylindrical.
  - Install and adjust the knife blade so it doesn't extend more than 1/8 inch beyond the body of the head.

Rule

WAC 296-806-48068
Guard planers

You must

- Make sure all cutting heads, and saws if used, are covered by a guard that:
  - Is metal
  - Forms all or part of the exhaust hood if an exhaust system is used
- Make sure a guard constructed from:
  - Sheet metal is at least 1/16 inch thick.
  - Cast iron is at least 3/16 inch thick.

WAC 296-806-48070
Guard planer feed rolls

You must

- Make sure feed rolls are guarded by a hood or other suitable guard that:
  - Prevents the operator's hand from contacting the in-running rolls at any point
  - Is attached to the frame carrying the rolls so it remains in adjustment for any thickness of stock

Rule

WAC 296-806-48072

Provide kickback protection on planers running stock of varied thickness

You must

- Provide kickback protection on planers running stock of varied thickness at the same time by providing either:
  - Sectional feed rolls that provide feeding contact pressure on the stock
    or
  - Suitable nonkickback fingers at the infeed end of each section

Note:

➢ The sectional feed rolls need to have sufficient yield in their construction to provide contact pressure on:
  - Any thickness of stock the machine is capable of processing

Rule

SHAPERS

WAC 296-806-48074

Make sure shapers meet these requirements

You must

- Guard the cutting head of the shaper by enclosing it with either:
  - A fixed guard, such as a cage
    or
  - An adjustable guard designed to keep the operator's hand away from the cutting edge
- Make sure the diameter of a circular shaper guard is at least as large as the greatest diameter of the cutter.

Note:

➢ A warning device of leather or other material attached to the spindle is **not** an acceptable substitute for a guard.

You must

- Guard all sections of the cutting tool except for an opening to allow access to the workpiece by the cutting tool.

Note:

➢ A ring guard is one means of satisfying the guarding requirement for cutting tools when involved in free hand or template shaping.

You must

- Make sure all double-spindle shapers have a spindle starting and stopping device for each spindle.

TENONING MACHINES

WAC 296-806-48076
Guard tenoning machine feed chains and sprockets

You must

- Guard feed chains and sprockets of all double-end tenoning machines by completely enclosing both of the following:
  - All sprockets
    and
  - Portions of the chain that aren't used for conveying stock

WAC 296-806-48078
Guard tenoning machines

You must

- Make sure all cutting heads, and saws if used, are covered by a metal guard that:
  - Covers at least the unused part of the periphery of the cutting head
  - Forms all or part of the exhaust hood if an exhaust system is used
- Make sure a guard constructed from:
  - Sheet metal is at least $^{1}/_{16}$ inch thick.
  - Cast iron is at least $^{3}/_{16}$ inch thick.

Rule

VENEER MACHINES

WAC 296-806-48080

Guard veneer cutters and wringer knives

You must

- Provide guards to prevent accidental contact with the front or rear knife edge.

WAC 296-806-48082

Guard veneer clippers

You must

- Make sure employees don't accidentally contact the knife edge of veneer clippers by providing either:
  - An automatic feed
    or
  - Guarding at both the front and rear of the clippers

WAC 296-806-48084

Follow these requirements for guarding guillotine cutters

Exemption:

- These requirements don't apply to continuous-feed trimmers.

You must

1) Provide **one** of the following to hand and foot powered guillotine cutters, so employees' hands can't reach the cutting edge of the knife:
   - Rods
   - Plates
   - Other satisfactory means of protection such as those outlined in Safeguarding Methods, WAC 296-806-20042 through WAC 296-806-20058.
2) Provide power-driven guillotine veneer cutters with either of the following:
   - Starting devices for each operator that require all of the following:
     - Both hands activating controls at the same time to start the cutting motion
     - At least one hand on a control during the complete stroke of the knife

     or
   - An automatic guard that does all of the following:
     - Keeps the hands of the operator away from the danger zone every time the blade comes down
     - Is used in combination with one-handed starting devices that require 2 separate movements of the device to start the cutting motion
     - Is designed to return positively to the nonstarting position after each complete cycle of the knife

Rule

WAC 296-806-48086

Provide mechanisms to stop power-driven guillotine cutters

Exemption:

- This requirement doesn't apply to continuous-feed trimmers.

You must

- Provide power-driven guillotine cutters with both:
  - Brakes or other stopping mechanism
    and
  - An emergency device that will prevent the machine from operating if the brake fails when the starting mechanism is in the nonstarting position

WAC 296-806-48088

Prohibit riders on veneer slicer carriages

You must

- Prohibit employees from riding on veneer slicer carriages